MITSUI-MAN B&W

MC(MC-C) ENGINES

INSTRUCTION BOOK

VOLUME 1

OPERATION AND DATA

三井造船株式会社
MITSUI ENGINEERING & SHIPBUILDING CO.,LTD.

THIS BOOK MUST NOT, EITHER WHOLLY OR PARTLY, BE COPIED, REPRODUCED, MADE PUBLIC OR ANY OTHER WAY MADE AVAILABLE TO A THIRD PARTY WITHOUT THE WRITTEN CONSENT OF THIS EFFECT FROM MITSUI ENGINEERING & SHIPBUILDING CO., LTD.

INDEX

VOL.1: OPERATION AND DATA

100.00 INDEX

701 SAFETY PRECAUTIONS AND ENGINE DATA

LABEL OF SAFETY PRECAUTUIN

PRECAUTUIN ITEMS

702 CHECKS DURING STANDSTILL PERIODS

GENERAL

REGULAR CHECKS AT ENGINE STANDSTILL DURING NORMAL SERVICE

CHECKS AT ENGINE STANDSTILL DURING REPAIRS

CHECKS AT ENGINE STANDSTILL AFTER REPAIRS

703 STARTING, MANOEUVRING AND RUNNING

STARTING-UP, MANOEUVRING AND ARRIVAL IN PORT

PLATES

APPENDIX

704 SPECIAL RUNNING CONDITIONS

FIRE IN SCAVENGE AIR BOX

IGNITION IN CRANKCASE

TURBOCHARGER SURGING

RUNNING WITH CYLINDERS OR TURBOCHARGERS OUT OF OPERATION

INDEX

(CONTINUE)

705 FUEL AND TREATMENT

FUEL OIL

PRESSURIZED FUEL OIL SYSTEM

FUEL TREATMENT

PLATES

706 PERFORMANCE EVALUATION & GENERAL OPERATION

OBSERVATION DURING OPERATION

EVALUATION OF RECORDS

CLEANING OF TURBOCHARGERS AND AIR COOLERS

APPENDI X 1 MEASURING INSTRUMENTS

APPENDI X 2 INDICATION DIAGRAM PRESSURE MEASUREMENTS AND POWER CALCULATION

APPENDI X 3 CORRECTION OF PERFORMANCE PARAMETERS

APPENDI X 4 TURBOCHARGER EFFIENCY

APPENDI X 5 ESTIMATION OF THE EFFECTIVE ENGINE POWER WITHOUT INDICATOR DIAGRAM

PLATES

CLEANING PROCEDURE FOR TURBOCHARGER

TURBOCHARGER CLEANING WITH WATER

CLEANING OF AIR COOLER

INDEX

(CONTINUE)

707 CYLINDER CONDITION

CYLINDER CONDITION

CYLINDER LUBRICATION

PLATES

708 BEARINGS AND CIRCULATING OIL

BEARINGS

ALIGNMENT OF MAIN BEARINGS

CIRCULATING OIL AND OIL SYSTEM

MAINTENANCE OF THE CIRCULATING OIL

CAMSHAFT LUB. OIL SYSTEM

SEPARATE CAMSHAFT LUBRICATION

TURBOCHARGER LUBRICATION

PLATES

709 WATER COOLING SYSTEMS

WATER COOLING SYSTEM

COOLING WATER TREATMENT

PLATES

INDEX

(CONTINUE)

710 DATA

710.1 ENGINE DATA IN SERVICE

710.2 TEST RESULT OF SHOP TRIAL

710.3 INSTRUCTION MANUAL FOR ADJUSTMENT & MEASUREMENT

3(A) LIST OF PRINCIPAL ITEMS

MAIN ENGINE

LOAD DIAGRAM

PRINCIPAL ITEM OF ACCESSORIES

3(B) STANDARD DIMENSION CLEARANCE & MEASUREMENT

BEARING

EXHAUST VALVE

FUEL VALVE

PISTON

HIGH PRESSURE PIPE

STUFFING BOX

CYLINDER LINER

CHAIN & CHAIN WHEEL

TURBOCHARGER

INDEX

(CONTINUE)

3(C) MANUAL FOR TIMING ADJUSTMENT

REVERSING & STARTING EQUIPMENT

CAM SHAFT

FUEL PUMP

EXHAUST VALVE GEAR

CYLINDER LUBRICATION

3(D) MANUAL FOR TIGHTENING-IP MAIN PARTS

TIGHTENING TABLE

STARTING VALVE & MAIN BEARING TIGHTENING

CYLINDER COVER TIGHTENING

3(E) WEIGHT LIST FOR MAIN PARTS

CYLINDER COVER & EXHAUST VALVE

PISTON & CROSSHEAD

CYLINDER LINER & CONNECTING ROD

CROSSHEAD PIN & CRANK PIN BEARING

OTHER PARTS

3(F) OPERATION & CONTROL

GOVERNOR

ENGINE PROTECTING DEVICE

BRIGE MANOEUVRING SYSTEM

INDEX

(CONTINUE)

PRESSURE & TEMPERATURE

EMERGENCY RUNNING

TURBOCHARGER CLEANING

3(G) DATA SHEET

710.4 INSPECTION RESULT FOR MAIN PARTS BEFORE AND AFTER SHOP TRIAL

710.5 SPRAY SHIELDING OF FLAMMABLE OIL

INSTRUCTION BOOK

VOLUME 1: OPERATION AND DATA

As a consequence of the continuous development of MITSUI-MAN B&W diesel engines, this instruction book has been made to apply generally to all the MC (MC-C) engine types.

This book is subject to copyright protection. The book must not, either wholly or partly, be copied, reproduced, made public, or in any other way made available to a third party, without the written consent to this effect from MITSUI ENGINEERING AND SHIPBUILDING CO., LTD.

MITSUI ENGINEERING & SHIPBUILDING CO., LTD.
MACHINERY & SYSTEM HEADQUARTERS
Head Office, Marine Diesel Engine Sales Department
6-4, Tsukiji 5-chome, Chuo-ku, Tokyo 104-8439, Japan
Tel. +81-3-3544-3625 Fax. +81-3-3544-3063

Tamano Works, Machinery Factory
1-1, Tama 3-chome, Tamano, Okayama 706-8654, Japan
Business Co-ordination department, Diesel Business group
Tel. +81-863-23-2500 Fax. +81-863-23-2770
Diesel Design department
Tel. +81-863-23-2530 Fax. +81-863-23-2769

1. This book forms part of following volume set:

Volume 1	OPERATION AND DATA (this book)
Volume 2	MAINTENANCE
Volume 3	COMPONENTS DESCRIPTION (CODE BOOK)
Volume 4	COMPONENTS DESCRIPTION (ACCESSORIES)
Volume 5	MANOEUVRING SYSTEM

2. The purpose of this instruction book is to describe the operation, and checking, and design features, of the engines.
Before operating, checking of the engine, read this book and master correct operation, which result in good engine condition and performance,

> Do not operate illegally to specified in this instruction book nor use differently from engine purpose / contracted specification, or which will involve serious injury or damage of the engine.

3. Where the item marked symbol (, ,), precaution should be taken especially.

4. The descriptions given in this book refer to standard systems.
Since each individual engine plant is built according to a "contract specification", deviations may be found in a specific plant.

5. In order to ensure the most efficient, economic, and up-to-date operation of our engines, we send out "Service Letters" containing first-hand information regarding accumulated service experience.

   Such Service Letters can either deal with specific engine types, or contain general instructions and recommendations for all our engine types, and are used as a guide when we prepare up-dated editions of our future instruction books.

   We would, therefore, like to draw your attention to the fact that new Service Letters could be of great importance to the operation of the engine, and we recommend that the engine staff file them in the relevant chapters of the present instruction book.

6. When ordering parts or inquiring of engine operation, following data should be included.

   MITSUI's regular parts should be used in case of exchanging.

   1: Name of vessel
   2: Engine No.
   3: Page or plate number
   4: Reg. Number

Contents

Safety Precautions Chapter 701

Checks During Standstill Periods Chapter 702

Starting, Manoeuvring and Running Chapter 703

Special Running Conditions Chapter 704

Fuel and Fuel Treatment Chapter 705

Performance Evaluation and General Operation Chapter 706

Cylinder Condition Chapter 707

Bearings and Circulating Oil Chapter 708

Water Cooling Systems Chapter 709

701 SAFETY PRECAUTIONS AND ENGINE DATA

702 CHECKS DURING STANDSTILL PERIODS

703 STARTING, MANOEUVRING AND RUNNING

704 SPECIAL RUNNING CONDITINS

705 FUEL AND FUEL TREATMENT

706 PERFORMANCE EVALUATION & GENERAL OPERATION

707 CYLINDER CONDITION

708 BEARING AND CIRCULATING OIL

709 WATER COOLING SYSTEM

710 DATA

Chapter 701
Safety Precautions

Contents Page

Label of Safety Precaution

1. Safety Sign, Signal Word 701-02
2. Symbols for Safety Marks 701-02

Precaution Items

1. Items regarding "Warning" 701-03
2. Items regarding "Caution" 701-04
3. Items regarding "Notice" 701-05

Label of Safety Precaution

The following symbol marks are used in this instruction manual and for the safety precaution labels of engine.

1. Safety Sign, Signal Word

	"DANGER"	It shows an imminent danger that no avoidance causes death and serious injury. It is not applied for items regarding damage of machinery.
	"WARNING"	It shows that no avoidance may cause death and serious injury. It is not applied for items regarding damage of machinery.
	"CAUTION"	It shows that no avoidance may cause slight injury, or damage of machinery. It is applied mainly for items regarding dealing.
	"NOTICE"	It shows our guidance items to avoid injury or damage of machinery. It is not applied for items regarding operation procedure.

2. Symbols for Safety Marks

a) Caution mark

 General caution

Inflammable → Fire

Explosive → Explosion

Corrosive → Corrosion

Poisonous → Poisoning

Electric → Electric shock

High temp. → Skin burn

Movable part → Rolled in

Sharp edge → cut

High press. fluid → External injury

Slipping

Falling

b) Prohibition mark

General prohibition

No smoking

Naked flames prohibited

No touching

c) Duty mark

Wear eye protector ••• Protective glasses etc.

Wear head protector ••• Helmet etc.

Wear hearing protector ••• Earplugs etc.

Wear hand protector ••• Gloves etc.

Wear foot protector ••• Safety shoes etc.

d) The others

Refer to separate paper

Precautions Items

The engines have essentially high temperature / pressure oil or water, heated parts, furthermore moving parts, which may cause injury.
Correct operation is important points for obtaining optimum safety in the engine room.

1. Items regarding "Warning"

⚠ Touching body or the other part to moving part may cause serious injury.
To avoid catching:

1) Do not touch the moving (rotating) parts (turning wheel, couplings, etc.) during the engine running.
2) Before checking during standstill period, ensure that turning is engaged, even at the quay, as the wake from other ship may turn the propeller and thus engine. Check beforehand that the staring air supply to the engine and starting air distributor, is shut off.
3) When turning or starting is carried out, prepare for stopping it in any case.

⚠ During running and immediately before staring the engine, high temperature / pressure lub. oil or water flow in the pipings.

1) Keep clear of the line of ejection when opening the cocks, as hot liquids or gases may be caused discharge.
2) During the engine running, ensure that there is no leakage from pipings.
If leakage is found, a countermeasure should be considered.
Especially, leakage from oil system may cause serious fire.
3) Check that there is no leakage from pipe connection, after reassembling.

⚠ Do not open the crankcase until the engine cooled down sufficiently, at least 10 minutes, after stopping the engine.
In case the engine is overheated, mixing oil mist with fresh air will involve the risk of explosions.

1) In case of oil mist alarm, do not open the crankcase until at least 30 minutes after stopping engine.
See Chapter 704. "Ignition in Crankcase".
2) Do not weld or use naked flames in the engine room until it has been ascertained that no explosive gases, vapor or liquids are present.

⚠ Keep clear of space below crane operating.

⚠ The engine room floor plate should be kept clean to avoid slip.

2. Items regarding "Caution"

⚠ During running and immediately after stopping the engine, the engine parts, especially around that exhaust pipe, indicator valve, turbocharger, cylinder cover, are very hot.

1) Do not touch such hot engine parts with bare hand or skin.
2) Wear the protective glove when measuring and/or checking.

⚠ O-rings and other rubber / plastic based sealing material which have been subjected to abnormally high temperature may have a caustic effect when be touching directly.

1) Use globes when removing these parts.
2) The gloves should be made of PVC or neoprene. Used gloves must be discard.

⚠ The dismantling of parts may cause the release of springs.

⚠ If the engine have been stopped for more than 30 minutes, turning or slow-turning (option) should always be effected, just starting in order to safeguard free rotation of the engine.
See "STARTING-UP, MANEUVERING, CRASH-STOP, AND ARRIVAL IN PORT", Chapter 703.

⚠ Before engaging the turning gear, check that the staring air supply is shut off, and that the indicator cocks are open.
When the turning gear is engaged, check that the indicator lamp "TURNING GEAR ENGAGED IN" has lit on.

⚠ Whenever repairs or alterations have been made to moving parts, bearing, etc., apply the "Feel over sequence" until satisfied that there is no undue heating (friction, oil-mist formation, blow-by, failure of cooling water or lubricating oil system, etc.).
See "CHECKS DURING STARING AND RUNNING", Chapter 703.

⚠ If there is a risk of freezing, then all engines, pumps, coolers, and pipe systems should be emptied of cooling water.

3. Items regarding "Notice"

△ Large spare parts should, as far as possible, be placed near the area of application, well secures, and accessible by crane.
All spares should be protected against corrosion and mechanical damage.
The stock should be checked at intervals and replacement in good time.

△ If there is a risk of grit or sand blowing into the engine room, when the ship is in port, the ventilation should be stopped and ventilating duct, skylights and engine room doors closed.

△ Welding, or other work which causes spreading of grit and/or swarf, must not be carried out near the engine room unless it is closed or protected, and the turbocharger air intake filters covers.

△ The exterior of the engine should be kept clean, and the paint work maintained, so that leakage can be easily detected.

701 SAFETY PRECAUTIONS AND ENGINE DATA

702 CHECKS DURING STANDSTILL PERIODS

703 STARTING, MANOEUVRING AND RUNNING

704 SPECIAL RUNNING CONDITINS

705 FUEL AND FUEL TREATMENT

706 PERFORMANCE EVALUATION & GENERAL OPERATION

707 CYLINDER CONDITION

708 BEARING AND CIRCULATING OIL

709 WATER COOLING SYSTEM

710 DATA

Chapter 702
Checks During Standstill Periods

	Contents		Page
1.	**General**		702-02
2.	**Regular Checks at Engine Standstill during Normal Service**		
	Check 2.1	Oil Flow	702-03
	Check 2.2	Oil Pan, and Bearing Clearances	702-03
	Check 2.3	Filters	702-04
	Check 2.4	Scavenge Port Inspection	702-04
	Check 2.5	Exhaust Receiver	702-04
	Check 2.6	Crankshaft	702-04
	Check 2.7	Circulating Oil Samples	702-04
	Check 2.8	Turbochargers	702-05
	Check 2.9	Manoeuvring Gear	702-05
	Check 2.10	Timing guide	702-05
	Check 2.11	Drain System for Water Mist Catcher	702-06
3.	**Checks at Engine Standstill during Repairs**		
	Check 3.1	Bolts, Studs and Nuts	702-07
	Check 3.2	Chain Casing	702-07
	Check 3.3	Leakages and Drains	702-07
	Check 3.4	Pneumatic Valves in Control Air System	702-07
	Check 3.5	Bottom Tank	702-07
4.	**Checks at Engine Standstill after Repairs**		
	Check 4.1	Flushing	702-08
	Check 4.2	Piston Rods	702-08
	Check 4.3	Turning	702-08
	Check 4.4	Turbochargers	702-08
	Check 4.5	Cylinder Lubricators	702-09
	Check 4.6	Manoeuvring Gear	702-09
	Check 4.7	Air Coolers	702-09

1. General

The present chapter describes how to check up on the condition of the engine while it is standstill.

△ To keep the engine-room staff well informed regarding the operational condition, we recommend recording the results of the inspections in writing.

The checks mentioned below follow a sequence which is suited to a forthcoming period of major repairs.

Checks 2.1-2.9
should be made regularly at engine standstill during normal service. Checks A1 to A9 should be coordinated and evaluated together with the measurements described in Chapter 706.

Checks 3.1-3.5
should be made at engine standstill during the repairs.

Checks 4.1-4.7
should be made at engine standstill after the repairs.

If repair or alignment of bearings, crankshaft, camshaft or pistons has been carried out, repeat checks 2.1, 2.2 and 2.6.

Checks to be made just before starting the engine are mentioned in Chapter 703.

△ During the lay-up period, and also when preparing the engine for a long time out at service, we recommend that our special instructions for preservation of the main engine are followed.

2. Regular Checks at Engine Standstill during Normal Service

△ The work should be adapted to the sailing schedule of the ship, such that it can be carried out at suitable intervals - for instance, as suggested in the instruction book "MAINTENANCE"

The maintenance intervals stated therein are normal for sound machinery. If, however, a period of operational disturbances occurs, or if the condition is unknown due to repairs or alterations, the relevant inspections should be repeated more frequently.

Based upon the results of Checks 2.1-2.9, combined with performance observations, it is determined if extra maintenance work (other than that scheduled) is necessary.

Check 2.1: Oil Flow

While the circulating oil pump is still running and the oil is warm, open up the crankcase and check that the oil is flowing freely from all crosshead, crankpin and main bearings.

The oil jets from the axial oil grooves in the crosshead bearing lower shells should be of uniform thickness and direction.
Deviations may be a sign of "squeezed white-metal" or clogged-up grooves, see also Chapter 708, Item 7.1.

Check also that oil is flowing freely from bearings, spray pipes and spray nozzles in the chain drive.
By means of the sight glasses at the piston cooling oil outlets, check that the oil is passing through the pistons.
Check also the thrust bearing and camshaft lubrication.

After a major overhaul of pistons, bearings, etc., this check should be repeated before starting the engine.

Check 2.2: Oil Pan, and Bearing Clearances

After stopping the circulating oil pump, check the bottom of the oil pan for fragments of bearing metal.
If possible, carry out this check for every anchorage.

If such fragments are found, judge which metal is damaged by observing the appearance and each bearing clearance and repair it.

Check crosshead, crankpin, main bearing and thrust bearing clearances with measuring tool, and note down the values, as described in Chapter 708, Item 7.12
Refer to Chapter 708, "Bearings", Item 7.1 for further information.

Check 2.3: Filters

Open up all filters, (also automatic filters), to check that the wire gauze and/or other filtering material is intact, and that no foreign bodies are found, which could indicate a failure elsewhere.

If the sludge checker, which can be examined during operation, is mounted in back-washing line for lube oil secondary filter, check that no foreign bodies are found for every week.
If any foreign bodies are discovered, find where it came from and take measures appropriately.

Check 2.4: Scavenge Port Inspection

⚠ WARNING
Do not insert your hand into the scavenge air port. When turning the engine, ensure there is no contact of rotation parts and no risk of surrounding persons.

Inspect the condition of the piston rings, cylinder liner, piston and piston rods, as detailed in Chapter 707, "Cylinder Condition", Item 3.
Note down the conditions as described in Chapter 707, "Cylinder Condition", Item 3.2.

During this inspection, circulate the cooling water and cooling oil through the engine so that leakages, if any, can be discovered.

Remove any coke and sludge from the scavenge air ports and boxes

In case of prolonged port calls or similar, follow the precautions mentioned in Check 4.2.

Check 2.5: Exhaust Receiver

Open up the exhaust receiver and inspect for deposits and/or any metal fragments, which could indicate a failure elsewhere.
Examine also the gas grid to make sure that it is clean and not broken.

Check 2.6: Crankshaft

Take deflection measurements as described in Chapter 708, "Alignment of main bearings"

Check 2.7: Circulating Oil Samples

Take an oil sample and send it to a laboratory for analysis and comments. See Chapter 708, "Maintenance of the circulating oil".

Check 2.8: Turbochargers

Open the three-way valve under the gas outlet casing to turbocharger cleaning position with water.
This prevents the possible accumulation of rain water, which could cause corrosion in the gas ducts, and partial wash-off of soot deposits, which again may result in unbalance of the turbocharger rotor.

Remove the gas inlet pipe on the turbine side of the chargers, and check for deposits on the turbine wheel and nozzle ring.
(For NA type turbocharger, clean the drain tank for seal air.)

See Check 4.4 regarding precautions to avoid turbocharger bearing damage during engine standstill.

Check 2.9: Manoeuvring Gear

Frequently check the movability of the system.

Disconnect the governor from the regulating gear by means of the impact hand wheel in the engine side console.
Move the rod connections by the regulating handle to check that the friction in the regulating gear is sufficiently low.

Lubricate the system (bearing and rod connections) at intervals of about 4000 hours.
Use grease of a good quality, and with "melting" point of about 120 °C.

For the mechanical governor, use an anti-corrosive oil, with additives against: foam, sludge formation, and damage to gaskets and paint.

The viscosity index should be high and the viscosity be in the range
29 ~ 51 mm^2/s at 40 °C

See also the instruction book "MANOEUVRING SYSTEM" for further information.

Check 2.10: Timing Guide

(Only for engine with VIT; Variable Injection Timing)

In order to keep the timing guide in an optimum service condition with regard to movability, we recommend that you twice a year apply diesel oil via the plug screw hole at the base of the fuel pump housings.

When the diesel oil has drained off, apply lube oil and reinstall the plug screw.

Check 2.11: Drain System for Water Mist Catcher

(Only for engine with auto drain trap valve)

In case the auto drain trap valve is mounted in the drain system, the inside of this valve to be checked regularly and cleaned at least every 3 months.

If the valve is clogged, the condensed water will enter into the cylinder, and thus cause excessive liner wears.
Furthermore, check the sight glass regularly.

3. Checks at Engine Standstill during Repairs

Check 3.1: Bolts, Studs and Nuts

Check all bolts, studs and nuts in the crankcase and chain casing to make sure that they have not worked loose.

The same applies to the holding-down bolts in the bedplate.
Check that side and end chocks are properly positioned, see also the instruction book "MAINTENANCE", Chapter 912
Check all locking devices.

Check 3.2: Chain Casing

Inspect the chains, tightener, wheels, bearings and rubber-bonded guide bars, and chain tightening condition.
See also the instruction book "MAINTENANCE", Chapter 906.

Check 3.3: Leakages and Drains

Remedy any water or oil leakages.
Clean drain and vent pipes of possible blockages by blowing-through.

Check 3.4: Pneumatic Valves in the Control Air System

Clean the filters.

Check 3.5: Bottom Tank

If not done within the previous year, pump the oil out of the bottom tank and remove the sludge.

After brushing the tank ceiling (to remove rust and scale), clean the tank and the coat the ceiling with clean oil.

4. Checks at Engine Standstill after Repairs

△ If repair or alignment of bearings, crankshaft, camshaft or pistons has been carried out, repeat Checks 2.1, 2.2 and 2.6.

Check 4.1: Flushing

If during repairs (involving opening-up of the engine or circulating oil system) sand or other impurities could have entered the engine, flush the oil system while by-passing the bearings, as described in Chapter 708.

Continue the flushing until all dirt is removed.

Check 4.2: Piston Rods

If the engine is to be out of service for a prolonged period, or under adverse temperature and moisture conditions, coat the piston rods with clean oil, and turn the engine while the circulating oil pump is running.

Repeat this procedure regularly in order to prevent corrosion attack on piston rods and crankcase surfaces.

Check 4.3: Turning

After restoring normal oil circulation, check the movability of the engine by turning it one or more revolutions using the turning gear.
Lubricate the gear contact faces by grease at proper interval.

Before leading oil to the exhaust valve actuator, check that air supply is connected to the pneumatic pistons of the exhaust valves, and that the exhaust valves are closed.
See also Chapter 703.

Check 4.4: Turbochargers

Close the three-way valve under the gas outlet casing to the engine running position.

⚠ Make sure that the turbocharger shaft does not rotate during engine standstill, as the bearing may suffer damage if the shafts rotate while the lube oil supply is stopped.

Check 4.5: Cylinder Lubricators

Turn each main piston to BDC in turn, and check, via the scavenge ports, the lube oil flow to the cylinder liner. See *plate 70701*.

For the Mechanical type lubricator:

Manually operate the "button pumps" until the cylinder oil is known for certain to be flowing from all the cylinder liner lubricating points.

Check that all steel balls are moving in the sight tubes, indicating oil flow.
In case of pressure-tight type lubricator, balls might be kept afloat when the leakage is large.

For the Alpha lubricator system:

Press the [PRELUB] button on the HMI panel for pre-lubricating, and check oil flow from all the cylinder liner lubricating points.
See also the instruction book "COMPONENT DESCRIPTION (ACCESSORIES)"

Check that flashing of all LEDs on the terminal boxes, indicating activating of lubricator.

Check that all pipe connections and valves are tight.

Check 4.6: Manoeuvring Gear

See Check 2.9.

Check 4.7: Air Coolers

With the cooling water pump running, check if water can be seen through the drain system sight glass from the water mist catcher.

If water is found, the cooler element is probably leaking.
In that case the element should be changed or repaired.

701 SAFETY PRECAUTIONS AND ENGINE DATA

702 CHECKS DURING STANDSTILL PERIODS

703 STARTING, MANOEUVRING AND RUNNING

704 SPECIAL RUNNING CONDITINS

705 FUEL AND FUEL TREATMENT

706 PERFORMANCE EVALUATION & GENERAL OPERATION

707 CYLINDER CONDITION

708 BEARING AND CIRCULATING OIL

709 WATER COOLING SYSTEM

710 DATA

Chapter 703
Starting, Manoeuvring and Running

Contents Page

Starting-up, Manoeuvring and Arrival in Port

1. Preparations for Starting 703-03
   - 1.1 Air Systems 703-03
   - 1.2 Lube Oil Systems 703-03
   - 1.3 Cooling Water Systems 703-04
   - 1.4 Turning the Engine 703-04
   - 1.5 Fuel Oil Systems 703-05
   - 1.6 Checking the Fuel Regulating Gear 703-05
   - 1.7 Miscellaneous 703-05
2. Starting-Up 703-06
   - 2.1 Starting 703-06
   - 2.2 Starting Difficulties 703-07
   - 2.3 Supplementary Comments 703-11
   - 2.4 Checks during starting 703-13
     - Check 1: Direction of Rotation 703-13
     - Check 2: Exhaust Valves 703-13
     - Check 3: Turbochargers 703-13
     - Check 4: Circulating Oil 703-13
     - Check 5: Cylinders 703-13
     - Check 6: Starting Valves on Cylinder Covers 703-13
     - Check 7: Pressures and Temperatures 703-13
     - Check 8: Cylinder Lubricators 703-14
3. Loading 703-14
   - 3.1 Loading Sequence 703-14
   - 3.2 Check during Loading 703-15
     - Check 9: Feel-over Sequence 703-15
     - Check 10: Running-in 703-15

Contents Page

4. Running 703-16
4.1 Running Difficulties 703-16
4.2 Supplementary Comments 703-18
4.3 Checks during Running 703-20
Check 11: Thrust Bearing 703-20
Check 11A: Chain tightener 703-20
Check 12: Shut Down and Slow Down 703-20
Check 13: Pressure Alarms (Pressure switches) 703-21
Check 14: Temperature Alarms (Temperature switches) 703-21
Check 15: Oil Mist Detector 703-21
Check 16: Observations 703-22
Check 17: Mist-catcher drain discharge line 703-22
5. Preparation PRIOR to Arrival in Port 703-22
6. Stopping 703-22
7. Operation AFTER Arrival in Port 703-23
8. Engine Control System 703-25
9. Crash-Stop 703-25

Plates

Changing-over from Remote to Emergency Control 70301
Emergency Control, Connection of Regulating Shaft 70302

Appendix

Guidance Alarm Limits and Measuring Values
for engines with exhaust valve actuators and/or camshaft lub. oil ME4012
for engines without exhaust valve actuators and/or camshaft lub. oil ME4013
for S26MC engine ME3174

Starting-up, Manoeuvring, and Arrival in Port

The following descriptions cover the standard manoeuvring system.

Since the manoeuvring system supplied for a specific engine may differ from the standard system, the instruction book "MANOEUVRING SYSTEM" should always be consulted when dealing with questions regarding a specific plant.

1. Preparation for Starting

See Chapter 705, "Fuel Treatment", Item 3.3, regarding correct fuel oil temperature before staring.

For information on checks to be made before starting, when cylinders are out of operation, see Chapter 704, "Running with Cylinders or Turbochargers out of Operation", Item 3.

1.1 Air Systems

– Drain water, if any, from the starting air system.

– Drain water, if any, from the control air system at the air receiver.

– Pressurise the air systems.
Check the pressure.

– Pressurise the air system to the pneumatic exhaust valves.

⚠ Air pressure must be applied before the lube oil pump is started.
This is to prevent the exhaust valves from opening too much.
See also Chapter 702, Check 4.3.

– Engage the lifting/rotation check rod mounted on each exhaust valve, and check that the exhaust valves are closed.

1.2 Lube Oil Systems

– Start the lube oil pumps for:
  • Main lube oil
  • Camshaft:
    – Engines without Unilub:
      camshaft lube oil,
    – Engines with Unilub:
      camshaft and/or exhaust valve driving gear oil booster pumps (if applied).
  • Turbocharger
    If the turbochargers are equipped with a built-in/separate lubricating system, check the oil level/supply through the sight-glasses.

– Check the oil pressure.

– Check the oil flow, through the sight-glasses, for:
  • Piston cooling oil
  • Turbocharger(s)

– Check that the cylinder lubricator system is filled with the correct type of oil.

– For the engine with Mechanical type lubricator, operate the cylinder lubricators manually.
  For the engine with Alpha lubricator system (OPTION), press the [PRELUB] button on the HMI panel.

  Check that oil is emitted.
  See also Chapter 702, Check 4.5.

  For the engine with only Mechanical type lubricator without LCD (Load Change Dependent) system, the regulating handle on the lubricator must be moved to one step-up position by manual.
  See also the instruction book "COMPONENT DESCRIPTION (ACCESSORIES)"

1.3 Cooling Water Systems

⚠ The engine must not be started if the jacket cooling water temperature is below 20 °C.

Preheat to minimum 20 °C or, preferably, to 50 °C.
See also Item 3.1 and Item 7, 8).

– Start the cooling water pumps.

– Check the pressure.

1.4 Turning the Engine

⚠ Always carry out the turning at the latest possible moment before starting and, under all circumstances, within the last 30 minutes.

This must be carried out to prevent damage caused by fluid in one of the cylinders.

Before beginning the turning, obtain permission from the bridge.

1) Open the indicator valves.

2) Turn the engine at least one revolution with turning gear.
   For the engine with Alpha lubricator system (OPTION), press the [PRELUB] button on the HMI panel.

   Check to see if fluid flows out of any of the indicator valves.

3) Close the indicator valves.

4) Disengage the turning gear.

Check that it is locked in the DISENGAGED position.
Check the indicator lamp.

5) Lift the locking plate of the main starting valve to the SERVICE position.
Check the indicator lamp.

- The locking plate must remain in the SERVICE position during running.
- The locking plate must remain in the BLOCK position during repairs.

1.5 Fuel Oil Systems

Regarding fuel oil temperature before stating, see Chapter 705, Item 3.

– Start the fuel oil booster pump and circulating pump.
If the engine was running on heavy fuel oil until stop, the circulating pump is already running.

– Check the pressures and temperatures.

1.6 Checking the Fuel Regulating Gear

– Close the shut-off valve of the stating air distributor to prevent the engine from turning.

– Switch over to EMERGENCY control from the engine side control console.
See description of the procedure on *Plate 70301*, Items 2 ~ 3, and also the instruction book "MANOEUVRING SYSTEM"

– Turn the regulating handwheel to increase the fuel index, and check that all the fuel pumps follow to the FUEL SUPPLY position.
With the regulating handwheel back in STOP position, check that all the fuel pumps show zero-index.

– Switch back to REMOTE control by following Plate 70301, Items 1 ~ 2 in the reverse order.

– Open the shut-off valve of the starting air distributor.

1.7 Miscellaneous

– Lubricate the bearings and rod connections in the regulating gear, etc., at the intervals stated in Chapter 702, Check 2.9

– Switch on the electrical equipment in the control console.

– Set switch for the auxiliary blowers in AUTO position.
The blowers will start at intervals of 10 sec.

⚠ See Chapter 704, "Fire in Scavenge Air Box”, Item 1,
with regard to incorrectly working auxiliary blowers.

2. Staring-Up

Refer to the instruction book "MANOEUVRING SYSTEM".

If the engine has been out-of-service for some time, starting-up is usually performed as a quay-trial.
Prior to this, it must be ascertained that:
– The harbour authorities permit quay-trial.
– The moorings are sufficient.
– A watch is kept on the bridge.

2.1 Starting

1) Air-Blow

This must be carried out to prevent damage caused by fluid in one of the cylinders.

Before beginning the air-blow, obtain permission from the bridge.

Is the special slow turning device installed (option) ?

YES: Open the indicator valves.
Turn the slow-turning switches to SLOW-TURNING position.
Put the telegraph receiver on DEAD SLOW in the required direction of rotation.
Put the manoeuvring dial into START position.
Check to see if fluid flows out of any of the indicator valves.
When the engine has moved one revolution, move the manoeuvring dial back to STOP position.
Turn the slow-turning switch back to NORMAL position.
Close the indicator valves.

NO: Open indicator valves.
Put the telegraph receiver on DEAD SLOW in the required direction of rotation.
Put the manoeuvring dial into START position.
Check to see if fluid flows out of any of the indicator valves.
When the engine has moved at least one revolution, move the manoeuvring dial back to STOP position.
Close the indicator valves.

2) Try-Engine

Before beginning the try-engine, obtain permission from the bridge.

Start the engine once at ahead and astern directions respectively.

Check that the individual air cylinders reverse the displaceable rollers for each fuel pump to outer position.

After confirmation of fuel-running, stop the engine immediately.

3) Start the engine.

2.2 Starting Difficulties

See also Item 2.3, "Supplementary Comments".

Difficulty	Point	Possible Cause	Remedy
Engine fails to turn on starting air after start order has been given.	1	Pressure in starting air receiver too low.	Start the compressors. Check that they are working properly.
	2	Valve on starting air receiver closed.	Open the valve.
	3	Valve to starting air distributor closed.	Open the valve.
	4	No pressure in the control air system.	Check the pressure. If too low, change over to the other reducing valve and clean the filter.
	5	Main starting air valve locked in closed position.	Lift locking plate to working position.
	6	Main starting air valve does not function owing to turning gear interlock.	Disengage the turning gear.
	7	Control selectors are wrongly set.	Correct the setting.
	8	The air cylinder for starting air distributor (if equipped) has not activated its end stop position.	Lubricate and make the distributor movable. Check and adjust the air cylinder.
	8a	Detecting switch for starting air distributor position is wrongly adjusted.	Check and adjust the switch.
	9	Pistons in starting air distributor sticking.	Lubricate and make the pistons movable. Overhaul the starting air distributor.
	10	Starting air distributor wrongly adjusted.	Check the timing marks, see "MAINTENANCE", Chapter 907.
	11	Sticking control valve for starting air distributor.	Overhaul the control valve slide.
	12	Starting air valves in cylinder covers defective.	Pressure-test the valves. Replace or overhaul defective valves, see also Item 7
	13	Control air signal for starting does not reach the engine.	Find out where the signal has been stopped and correct the fault.
	14	Pressure switch "PFZ" does not send "Fuel-off" signal. (under bridge control)	Locate the fault and rectify the cause.
	15	Starting air is cut by main lub. oil low pressure start interlock. (NK only)	Check the main lub. oil pressure.
Engine does not reverse when order is given.	16	Coil of solenoid valve for the desired rotation direction does not receive voltage.	See the instruction book "MANOEUVRING SYSTEM".
	17	Control air signal for the desired direction of rotation does not reach the engine.	By loosening one copper pipe at a time on the signal's route through the system, find the detective valve or pipe which stop the signal. Repair or replace defective part.

Starting Difficulties (cont.)

Difficulty	Point	Possible Cause	Remedy
Engine turns too slowly (or unevenly) on starting air.	18	“Slow-turning” (option) of engine adjusted too low.	Set the “slow-turning” adjustment screw so that the engine turns as slowly as possible without faltering.
	19	“Slow-turning” (option) is not cancelled (automatic control).	See the instruction book "MANOEUVRING SYSTEM".
	20	Faulty timing of starting air distributor.	Check the timing, see "MAINTENANCE", Chapter 907.
	21	Defective starting valves in cylinder covers.	Replace or overhaul the defective valves.
Engine turns on starting air but stops, after receiving order to run on fuel.	22	Puncture valves not deaerated.	Find the cause of the stop-order and correct the fault.
	23	Shut-down of engine.	Check the pressure and temperature, and find the cause.
	24	Sluggishness in the manoeuvring gear.	Lubricate the manoeuvring gear. Ensure that the fuel pumps, rod connections and bearings are movable.
	25	Faulty adjustment of manoeuvring gear.	Check the rod connections. Check that the fuel index.
	26	Governor air booster does not supply oil pressure to the governor during the starting period. (Woodward mechanical governor only.)	See the instruction book "COMPONENT DESCRIPTION (ACCESSORIES)".
	27	The pre-set speed setting pressure to the governor is set too low, or for too short a period. (Woodward mechanical governor only.)	The pressure shall be set between 0.16 and 0.20 MPa, and maintained for about 6 seconds.
	28	Engine runs too long on starting air, so the governor has time to regulate the fuel index downwards, before running starts on fuel oil.	Automatic running: Adjust the starting level Manual running: Shorten the starting air period.
	29	Fault in Governor	See the instruction book "COMPONENT DESCRIPTION (ACCESSORIES)".

Starting Difficulties (cont.)

Difficulty	Point	Possible Cause	Remedy
Engine turns on starting air, but no fuel injection occurs due to too low fuel index.	30	Air contamination in fuel pump or fuel valve	Wait and try start again, as fuel valves have auto deaeration function.
	31	Too low fuel pressure.	Increase the pressure or/and clean the filter.
	32	Detective suction valve or puncture valve in fuel pump.	Change or repair it.
	33	Sticking fuel valve spindle due to incorrect tightening.	Tighten correctly.
	34	Worn fuel pump plunger/barrel.	Change the pump barrel with plunger.
	35	Too much water in fuel.	Clean the fuel more effectively.
	36	Detective fuel valve or fuel valve atomizer.	Overhaul the fuel valve. Check the atomizer hole. Change the fuel valve.
	37	Starting with compression under 2.2 MPa.	Check piston rings through scavenging port. Check the exhaust valve leakage.
	38	Fuel injection timing is too low.	Check the fuel pump lead and fuel valve opening pressure.
	39	Too high viscosity of fuel oil.	Heat up according to fuel viscosity. See Chapter 705.
Blow from cylinder safety valve due to first ignition is too fast.	40	Too much fuel oil into the cylinder.	Check and adjust the load limit of governor.
	41	Insufficient scavenging air.	Check the auxiliary blower running. Clean air/gas passage. Check the T/C speed before fuel injection start.
	42	Oil on piston crown.	By scavenging port inspection, check the liquid on piston top. If it came from fuel valve, replace the valve.
	43	Sluggishness in the manoeuvring gear.	Lubricate the manoeuvring gear. Ensure that the fuel pumps, rod connections and bearings are movable.

Starting Difficulties (cont.)

Difficulty	Point	Possible Cause	Remedy
Engine turns on fuel, but runs unevenly (unstable).	44	Auxiliary blowers not functioning	Start auxiliary blowers after doing the air-blow.
	45	Scavenge air limit set at too low level.	Check the level of scavenge air limiter. Check the scavenge air pressure at the actual load. Compare the pressure with shop or sea trial observations.
	46	Fuel filter blocked.	Clean the filter.
	47	Too low fuel pressure.	Increase the pressure.
	48	One or more cylinders not firing.	Check suction valve and puncture valve in fuel pump. Check the individual fuel index, if no fuel index, check the rod connections and the safety shut-down system. If fault not found, change fuel valves.

2.3 Supplementary Comments

Item 2.2, "Starting Difficulties" gives some possible causes of starting failures, on which the following supplementary information and comments can be given.

Point 1:

The engine can usually start when the starting air pressure is above 1.0 MPa.
The compressors should, however, be started as soon as the pressure in the starting air receiver is below 2.5 MPa.

Points 12 and 28:

The testing procedure describing how to determine that all starting valves in the cylinder covers are closed and are not leaking is found in Item 7.

If a starting valve leaks during running of the engine, the starting air pipe concerned will become very hot.
When this occurs, the starting valve must be replaced and overhauled, possibly replacing the spring.

If the engine fails to start owing to the causes stated under 12, this will usually occur in a certain position of the crankshaft.
If this occurs during manoeuvring, reversing must be made as quickly as possible in order to move the crankshaft to another position, after which the engine can be started again in the direction ordered by the telegraph.

Point 13:

Examine whether there is voltage on the solenoid valve which controls the starting signal.
If the solenoid valve is correctly activated, the cause might be on pneumatic side.

Trace the fault by loosening one copper pipe at a time on the route of the signal through the system, until the valve blocking the signal has been found, and replace or overhaul defective part.

Point 23:

If the shut-down was caused by over-speed, cancel the shut-down impulse by putting the regulating dial into the STOP position, whereby the cancellation switch closes, and the puncture valve is vented.

If the shut-down was caused by too low pressure or too high temperature, bring these back to their normal level.
The shut-down impulse can then be cancelled by putting the regulating dial into STOP position.

Point 25 and 44:

When the regulating dial is set to START position, the fuel index should be high enough and the engine speed should be high enough to ignition.
Therefore, the fuel rack movement should be quick.

If the manoeuvring gear, especially the regulating shaft, has high friction, however, the movement becomes slower and the fuel index becomes lower.
Lubricate and make them smooth.

Point 30:

In case of air is contaminated in the fuel system, fuel valve may be sticking or spring may be broken.
If fuel valve sticking is found, replace and overhaul it.

⚠ Check that there is no fuel on the piston crown.

Too high temperature of heavy fuel may cause same phenomena because the gas is separated from the fuel. See Chapter 705, "Fuel Treatment"

Point 31:

Too low fuel oil pressure might be caused by blocking of the filter(s), opening by-pass valve of the booster pump or fuel oil high viscosity due to insufficient heating.

Point 36:

If fuel is injected by detective fuel valve or worn atomiser, atomising is insufficient and it may cause poor or too fast ignition.

Point 37:

In order to ignition, the compression pressure should be above 2.2 MPa.
Taking indicator card during starting checks this.
Check piston rings of the cylinder of which compression is too low by scavenging port inspection.
If the piston rings are in good order, check the exhaust valve seat, and replace or overhaul it.

Point 38:

When new fuel oil of different properties is used, readjustment of fuel pump timing may be necessary.
There is a possibility that cam(s) may be slipped on the shaft and the timing is changed.
Too high opening pressure of fuel valve may cause delayed injection.

Point 42:

The oil on piston crown is normally from detective fuel valve(s).
However, in rare case, it may be lubricating oil from cracked piston crown.

⚠ As this might cause serious damage, check the leakage and repair it.

2.4 Checks during Starting

Make the following checks immediately after starting.

Check 1: Direction of Rotation

Ensure that the direction of propeller rotation corresponds to the telegraph order.

Check 2: Exhaust Valves

See that all exhaust valves are operating correctly.
After checking the functioning, disengage the lifting/rotation indicators.

Check 3: Turbochargers

Ensure that all turbochargers are running.

Check 4: Circulating Oil

Check that the pressure and discharge are in order (main engine and turbochargers).

Check 5: Cylinders

Check that all cylinders are firing.
Check that the unusual drain is not observed.

Check 6: Starting Valves on Cylinder Covers

Leaking from the drain pipe of starting air main pipe indicates leaking starting valve.

Check 7: Pressures and Temperatures

See that everything is normal for the engine speed.
In particular:
The circulating oil (bearing lubrication and piston cooling), camshaft lubricating oil (engines without Unilub), fuel oil, cooling water, scavenge air, and control and safety air.
Refer to Appendix "Guidance Alarm Limits and Measuring Values".

Check 8: Cylinder Lubricators

For the Mechanical type lubricator:

Make sure that the lubricators are working and the oil is fed from all lube points by sight glass.

Check that the specified oil is enough in the feeder tank.

If the LCD (Load Change Dependent) lubricators are equipped, check that the actuators are in the position for increased cylinder lubricating oil dosage during starting and manoeuvring.

The lubricator pump stroke should be occasionally checked by measuring the free movement of the adjustment screw, which corresponds to the pump stroke.

For the Alpha lubricator system:

Make sure that the lubricators are working by checking the feedback LEDs on the terminal box.

Check that the specified oil is enough in the feeder tank.

For checking and adjusting the lubricator, see the instruction book "COMPONENT DESCRIPTION (ACCESSORIES)".

3. Loading

3.1 Loading Sequence

Regarding load restrictions after repairs and during running-in, see Item 3.2.

If there are no restrictions, load the engine according to this program:

Is the cooling water temperature:

above 50 °C

Increase gradually to 90% of MCR speed.

Increase to 100% speed over a period of 30 minutes or more.

between 20 °C and 50 °C

Preferably, preheat to 50 °C.

If the engine is started with a cooling water temperature below 50 °C, increase gradually to 90% of MCR speed.

When the cooling water temperature reaches minimum 50 °C, increase to 100% of MCR speed over a period of 30 minutes or more.

The time it takes to reach 50 °C will depend on the amount of water in the system and in the engine load.

below 20 °C

Do not start the engine.

Preheat to minimum 20 °C, or preferably to 50 °C.

When 20 °C, or preferably 50 °C, has been reached, start and load the engine as described above.

See Also Item 1.3.

3.2 Checks during Loading

Check 9: Feel-over sequence

⚠ WARNING
During feeling over, the turning gear must be engaged, and the main starting valve and the starting air distributor must be blocked. The starting air distributor is blocked by closing the cross-over valve.

If the condition of the machinery is uncertain (e.g. after repair or alterations), the "feel-over sequence" should always be followed, i.e.:

a) After 15 ~ 30 minutes" running on SLOW (depending on the engine size);
b) again after 1 hours running;
c) at sea, after 1 hours running at service speed;

stop the engine, open the crankcase, and feel-over the moving parts listed below (by hand or with a "Thermo-feel") on sliding surfaces where friction may have caused undue heating.

Feel:
- Main, crankpin and crosshead bearings,
- Piston rods and stuffing boxes,
- Crosshead shoes,
- Telescopic pipe,
- Chain and bearings in the chain casing, and in the moment compensator chain drive (if mounted),
- Camshaft bearing housings,
- Thrust bearing / guide bearing,
- Axial vibration damper,
- Torsional vibration damper (if mounted).

After the last feel-over, repeat Check 2.1, in Chapter 702.
See also Chapter 704, "Ignition in Crankcase".

Check 10: Running-in

For a new engine, or after :
- repair or renewal of the large bearings,
- renewal or reconditioning of cylinder liners and piston rings,

allowance must be made for a running-in period.

Regarding bearings : increase the load slowly, and apply the feel-over sequence, see check 9.

Regarding liners / ring : See Chapter 707, “Cylinder Condition”, Item 4.13.

4. Running

4.1 Running Difficulties - See also Item 4.2, "Supplementary Comments"

Difficulty	Point	Possible Cause	Remedy
Exhaust temperature rises. **a) all cyl.**	1	Increased scavenge air temperature owing to inadequate air cooler function.	See Chapter 706, "Evaluation of Records", Item 4.
	2	Fouled air and gas passages.	Clean the turbine by means of dry cleaning / water washing. Clean the air coolers, with stopped engine. Check the back pressure in the exhaust system just after the T/C turbine side. *)
	3	Inadequate fuel oil cleaning, or altered combustion characteristics of fuel.	See Chapter 705. *)
	4	Wrong position of camshaft (Maladjusted or defective chain drive).	Check *pmax*. Check camshaft with pin gauge. Check chain tension.
b) single cyl.	5	Defective fuel valves, or fuel nozzles	*)
	6	Leaking exhaust valve.	Replace and overhaul the valve. *)
	7	Blow-by in combustion chamber.	*)
	8	Wrongly adjusted, or slipped, fuel cam.	Check the fuel pump lead.
	9	Reversible roller guide in wrong position.	Check the roller guide mechanism for seized bearings, roller guide, roughened rollers or cam etc. In case of seizure being observed, check the lub. oil filter for possible damage.
Exhaust temperature decreases. **a) all cyl.**	10	Falling scavenge air temperature.	Check that the sea water system thermostat valve is functioning correctly.
	11	Air/gas/steam in fuel system	Check the fuel oil booster and circulating pump pressures. Check the suction side of the booster pump for air leakage. Check the fuel oil preheater for steam leakage.
b) single cyl.	12	Detective fuel pump suction valve.	Repair the suction valve.
	13	Fuel pump plunger or puncture valve sticking or leaking.	Replace the fuel pump barrel with plunger or the puncture valve.
	14	Exhaust valve sticking in open position	Replace the exhaust valve.

* See also "Evaluation of Records" in Chapter 706: in particular the fault diagnosing table under Item 2.2.

Running Difficulties (cont.)

Difficulty	Point	Possible Cause	Remedy
Engine speed decrease	15	Oil pressure before fuel pumps too low.	Raise the booster and circulating pump pressures to the normal level.
	16	Air/gas/steam in the fuel oil.	See point 11.
	17	Defective fuel valve(s) or fuel pump(s).	Replace and overhaul the defective valve(s) and pump(s).
	17a	Fuel index limited by torque/scavenge air limiters in the governor due to abnormal engine load.	See Chapter 706, "Observations during Operation", Item 2.1
	18	One (or more) reversible roller guides in wrong position.	See point 9.
	19	Water in fuel oil.	Clean the fuel more effectively.
	20	Fire in scavenge air box	See Chapter 704.
	21	Slow-down or shut-down.	Check pressure and temperature levels. If these are in order, check for faults in the slow-down equipment.
	22	Combustion characteristics of fuel oil	When changing from one fuel oil type to another, alterations can appear in the speed, at the same fuel index.
	23	Fouling of hull, propeller.	See Chapter 706, "Observations during Operation", Item 2.1.
Smoky exhaust	24	Turbocharger speed do not correspond with engine speed.	Some smoke development during acceleration is normal: No measures called for. Heavy smoke during acceleration: Fault in governor limiters setting.
	25	Air supply not sufficient.	See reference quoted under point 1. Check engine room ventilation
	26	Defective fuel valves (incl. nozzles)	See point 5 :and Chapter 706, Appendix 2.
	27	Fire in scavenging air box	See Chapter 704.
	28	Governor failure/erratic regulation.	See Item 4.2.

4.2 Supplementary Comments

Item 4.1, " Running Difficulties" gives some possible causes of operational disturbances, on which the following supplementary information and comments can be given.

Point 6:

A leaking exhaust valve manifests itself by an exhaust temperature rise, and a drop in the compression and maximum pressures.

In order to limit the damage, if possible, immediately replace the valve concerned, or, as a preliminary measure, lift the fuel pump roller guide.

Point 7:

In serious cases, piston ring blow-by manifests itself in the same way as a leaking exhaust valve, but sometimes reveals itself at an earlier stage by a hissing sound.
This is clearly heard when the drain cock from the scavenge air box is opened. At the same time, smoke and sparks may appear.

⚠ **WARNING**
When checking, or when cleaning the drain pipe, keep clear of the line of ejection, as burning oil can be blown out.

With stopped engine, blow-by can be located by inspecting the condition of the piston rings, through the scavenge air ports.
Sludge, which has been blown into the scavenge air chamber, can also indicate the defective cylinder.

Since blow-by can be due to sticking of unbroken piston rings, there is a chance of gradually diminishing it, during running, by reducing the fuel index for a few minutes and, at the same time, increasing the cylinder oil amount.
If this is not effective, the fuel index and *pmax* must be reduced until the blow-by ceases.

⚠ The pressure rise *pcomp–pmax* must not exceed the value measured on test bed at the reduced mean effective pressure or fuel index.

Regarding adjustment of *pmax*, see “MAINTENANCE”, Chapter 909.

If the blow-by does not stop, the fuel pump roller guide should be lifted, or the piston ring changed.

⚠ Running with piston ring blow-by, even for a very limited period of time, can cause severe damage to the cylinder liner.
This is due to thermal overheating of the liner.
Furthermore, there is a risk of fire in the scavenging air receiver, see also Chapter 704, "Fire in Scavenging Air box".

In case of severe blow-by, there is a general risk of starting troubles owing to too low compression pressure during the starting sequence.

Concerning the causes of blow-by, see Chapter 707, where the regular maintenance is also described.

Points 11 and 17:

Air/gas in the fuel oil system can be caused by a sticking fuel valve spindle, or because the spring has broken.
If a detective fuel valve is found, this must be replaced.

⚠ It should be checked that no fuel oil has accumulated on the piston crown.

Points 9 and 18:

In the normal running condition, the reversible roller guide is in a self-locking position.
However, in the event of increased friction in the roller guide mechanism (seizure), there is a risk that the roller guide link might change position.

Points 13 and 17:

Fuel pump plunger sticking might occur during fuel oil changing-over period on new or repair pumps.

To prevent hammering between roller and cam, it is necessary to stop the engine and to lift up the fuel roller guide to its top position.
Afterwards, replace the stuck pump.
The lifting of roller guide can be done by the lifting device.

⚠ Before lifting down the roller guide of replaced pump on the cam, the pump is pre-heated at least 10 minutes by circulating the heated fuel oil.

⚠ Roller guide should be lifted down when the engine stopped.

If, to obtain full load, it proves necessary to increase an individual fuel index by more than 10% (from sea trial value), then this in most cases indicates that the pump is worn out.
This can usually be confirmed by inspecting the plunger.
If the cut-off edge shows a dark-colored eroded area, the pump should be sent to repair to the engine builder.
This can usually be done by reconditioning the bore, and fitting a new plunger.

Points 28:

If the fault lies in the governor itself, the special governor instruction book should be consulted.
External influences can also cause erratic regulation.

For instance:

- sluggishness in the regulating gear,
- firing failure,
- unbalance in the load distribution between the cylinders. see Chapter 706, "Evaluation of Records", Item 1.1,
- RPM detecting pick-up abnormal (Electronic governor),
- scavenging air pressure sensor abnormal (Electronic governor),
- driving chain wrongly tensioned (Woodward mechanical governor),
- falling oil pressure to the governor (Woodward mechanical governor),
- lack of control air pressure (Woodward mechanical governor).

For starting and running the engine with disengaged governor due to failure, change over to EMERGENCY RUNNING. See *Plate 70301*, *70302*.

When the governor is disengaged, the engine is still protected against overspeed by the electric overspeed trip, i.e. the engine is stopped automatically if the engine speed increase to the overspeed setting.
This blocking can only be cancelled by moving the regulating dial to the STOP position.
Manoeuvring must therefore be carried out very carefully, especially when navigating in rough weather.

4.3 Check during Running

Check 11: Thrust Bearing

Check measuring equipment.

Check 11A: Chain tightener

Check the chain tighteners for the camshaft drive and the moment compensators (if installed).
See the instruction book "MAINTENANCE", Chapter 906.

Check 12: Shut Down and Slow Down

Check measuring equipment.

Check 13: Pressure Alarms (Pressure switches)

The functioning and setting of the alarms should be checked.
It is essential to carefully check the functioning and setting of sensors.

They must be checked under circumstances for which the sensors are designed to set off alarm.

This means that sensors for low pressure/temperature should be tested with falling pressure/temperature, and sensors for high-pressure/ temperature should be tested with rising pressure/temperature.

If no special testing equipment is available, the checking can be effected as follows:

a) The alarm pressure switches in the lubricating and cooling systems may be provided with a test cock, by means of which the pressure at the sensor may be decreased, and the alarm thereby tested.

b) If there is no such test cock, the alarm point must be displaced until the alarm is given.
When the alarm has thus occurred, it is checked that the pressure switch scale is in agreement with the actual pressure.
(Some types of pressure switches have an adjustable scale).

Then reset the pressure switch to the preselected alarm limit, which should cause the alarm signal to stop.

Check 14: Temperature Alarms (Temperature switches)

See also Check 13.

Most of the thermostatic valves in the cooling systems can likewise be tested by displacing the alarm point, so that the sensor responds to the actual temperature.

However, in some cases, the setting cannot be displaced sufficiently, and such sensors must be tested by heating the sensing element in a water or oil bath, together with a reference thermometer.

Check 15: Oil Mist Detector

Check the oil mist detector.

Adjustment and testing of the alarm function is effected in accordance with the instruction book "COMPONENT DESCRIPTION (ACCESSORIES)"

Check 16: Observations

Make a full set of observations, including indicator cards, see *Plate 70603* "ENGINE DATA" and Chapter 706, Appendix 1.
Check that pressures and temperatures are in order.

Check the load distribution between the cylinders, see Chapter 706, "Evaluation of Records", Item 2.1.

Check 17: Mist-catcher drain discharge line

Discharging condition of the condensed water is to be watched from the sight grass of the mist-catcher drain pipe line.
Check for any restrictions in the discharge line.
See *Plate 70614* and Chapter 706, "Cleaning of Turbochargers and Air Coolers", Item 3.

5. Preparations PRIOR to Arrival in Port

1) Decide whether the harbour manoeuvres should be carried out on diesel oil or on heavy fuel oil.
Change-over should be carried out one hour before the first manoeuvres are expected.
See Chapter 705, "Fuel Treatment", Item 4.2.

2) Start an additional auxiliary engine to ensure a power reserve for the manoeuvres.

3) Make a reversing test.
This ensures that the starting valves and reversing mechanism are working.

4) Blow-off any condensed water from the starting air and control air systems just before the manoeuvres.

6. Stopping

Stop the engine by putting the manoeuvring dial into STOP position.

See also Item 9, regarding quick reduction of the ship’s speed.

7. Operations AFTER Arrival in Port

When the FINISHED WITH ENGINE order is received in the control room:

1) Switch-off the auxiliary blowers.

2) Test the starting valves for leakage:

⚠ Permission from the bridge should always be obtained before doing this, and the turning gear must be disengaged, as a leaky valve may cause the engine to run.

- Close the valve to the starting air distributor.
- Open the indicator valves.
- Change-over to EMERGENCY control.
- Activate the START button.
  This admits starting air, but not control air, to the starting valves.
- Check to see if air blows out from any of the indicator valves.
  In this event, the starting valve concerned is leaky.
  If the cylinder is in BDC, detection can be difficult, due to air escaping through the scavenge air ducts in the cylinder liner.
- Replace or overhaul any defective starting valves.

3) Lock the main starting valve in its lowest position by means of the locking plate.
Engage the turning gear. Check the indicator lamp.
Check that the valve to the starting air distributor is closed.

4) Stop the camshaft lube oil pump / booster pumps (if applied).

5) Close and vent the control air and safety air systems.

⚠ Do not stop the air supply to the exhaust valve air cylinders, as air draught through an open exhaust valve may cause the turbocharger shaft to rotate, thus causing bearing damage, if the lube oil supply to the turbocharger is stopped.

6) Wait minimum 15 minutes after stopping the engine, then:
- stop the lube oil pumps
- stop the cooling water pumps.

This prevents overheating of cooled surfaces in the combustion chambers, and counteracts the formation of carbon deposits in piston crowns.

7) Fuel oil pumps;

Did engine run on heavy fuel oil until stop?

YES: Stop the fuel oil booster pumps.
Do not stop the circulating pumps.
Keep the fuel oil preheated.
Note that cold heavy fuel oil is difficult or even impossible to pump.

The circulating oil temperature may be reduced during engine standstill, as described in Chapter 705, "Fuel Treatment", Item 3.2.

NO: Stop the fuel oil booster and circulating pumps.

8) Freshwater preheating during standstill:

Will harbour stay exceed 4 ~ 5 days?

YES: Keep the engine preheated or unheated.
However, see Item 1.3 and 3.1.

NO: Keep the engine preheated to minimum 50 °C.
This counteracts corrosive attack on the cylinder liners during starting-up.

Use a built-in preheater or the auxiliary engine cooling water for preheating of the engine.

See also Chapter 709, "Water Cooling Systems", Item 5.

9) Switch-off other equipment which need not operate during engine standstill.

10) Regarding checks to be carried out during engine standstill, see Chapter 702.

8. Engine Control System

Refer to the instruction book "MANOEUVRING SYSTEM".

9. Crash-Stop

When the ship's speed must be reduced quickly, the engine can be started in the opposite direction of rotation according to the procedure below.

Regarding crash-stop during Bridge Control, see the special instruction book for the Bridge Control System.

1) Acknowledge the telegraph, and put the telegraph receiver into astern position.

2) Put the manoeuvring dial into STOP position.

   The engine will continue to rotate (at slowly decreasing speed), because the velocity of the ship through the water will drive the propeller, and thereby turn the engine.

3) When the engine speed has fallen to the REVERSING LEVEL (below 25 ~ 35% of MCR speed, depending on engine size and type of ship), put the manoeuvring dial into the START position.

4) Check that the fuel limiter by scavenging air pressure in the governor is cancelled.
   If not cancelled automatically, it should be cancelled by manually.

5) When the START LEVEL is reached in the opposite direction of rotation, put the manoeuvring dial into the running position.

   If the ship's speed is too high, the START LEVEL will not be reached quickly.
   This will cause a loss of stating air.
   In this case:
   - Put back the manoeuvring dial into the STOP position.
   - Wait until the speed has fallen further.
   - Return procedure 3).

Does the engine run on fuel in the correct direction of rotation ?

YES: Keep the engine speed low during the first few minutes.
This is in order to reduce the hull vibrations that may occur owing to "conflict" between the wake and the propeller.

NO: Cancel the fuel limiter by scavenging air pressure in the governor.
Return procedure 3).

Plate 70301 Change-over from Remote to Emergency Control

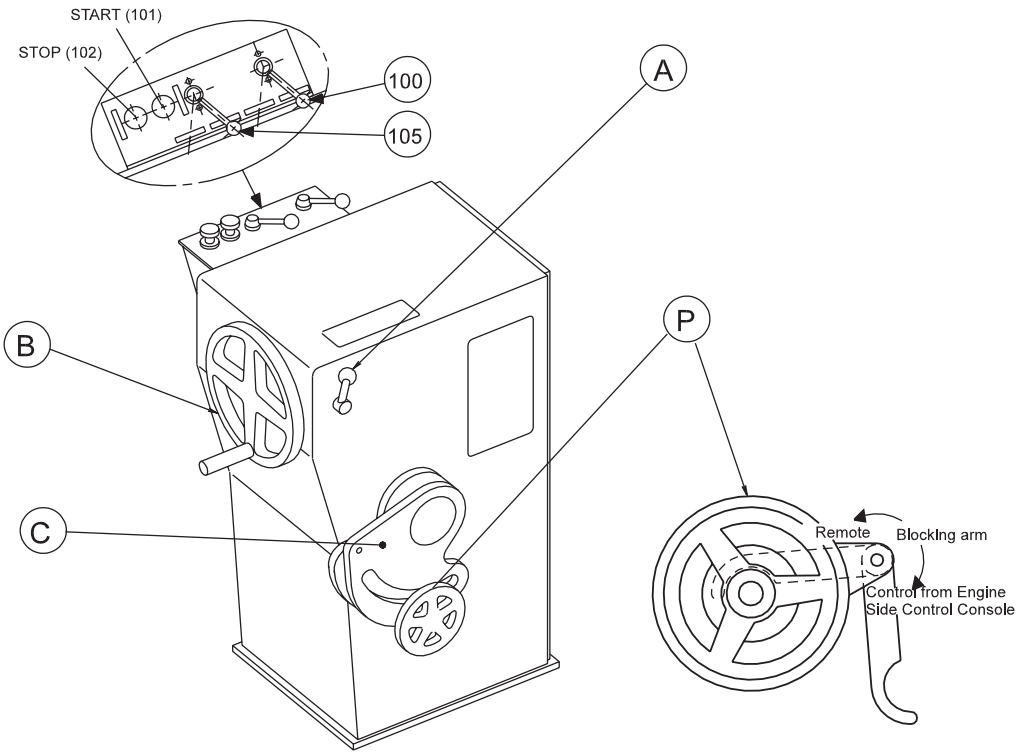

1) (Engines with reversing gear)
Check that valve (105), which is the "telegraph handle" of the emergency control system, is in the required position.
Note that reversing to a new direction is only possible when STOP valve (102) is activated.

2) Turn the handle (A) anti-clockwise to free the regulating handle (B).

3) Put the blocking arm in emergency position.

4) Turn handwheel (B) to move the innermost lever of the change-over mechanism (C) to a position where the impact handwheel (P) is able to enter the tapered slots in both levers.
Quickly, turn the impact handwheel (P) anti-clockwise.
This causes disconnection of the governor and connection of the regulating handwheel (B) to the fuel pump.

The impact handwheel (P) must be very firmly tightened so as to ensure that it does not work itself loose.
This firm tightening must also be carried out when changing over from Emergency Control to Remote Control.

It is vital that the impact handwheel (P) is used to firmly secure the tapered pin and thus the cone. This will prevent the impact wheel (P) from inadvertently causing the cone to loosen at certain vibration levels.

5) Change position of valve (100) from Remote to Emergency.

6) Ready for start.

Always keep the threads of the change-over mechanism well lubricated, to ensure a quick changing-over.

Plate 70302 **Emergency Control**
Connection to Regulating Shaft

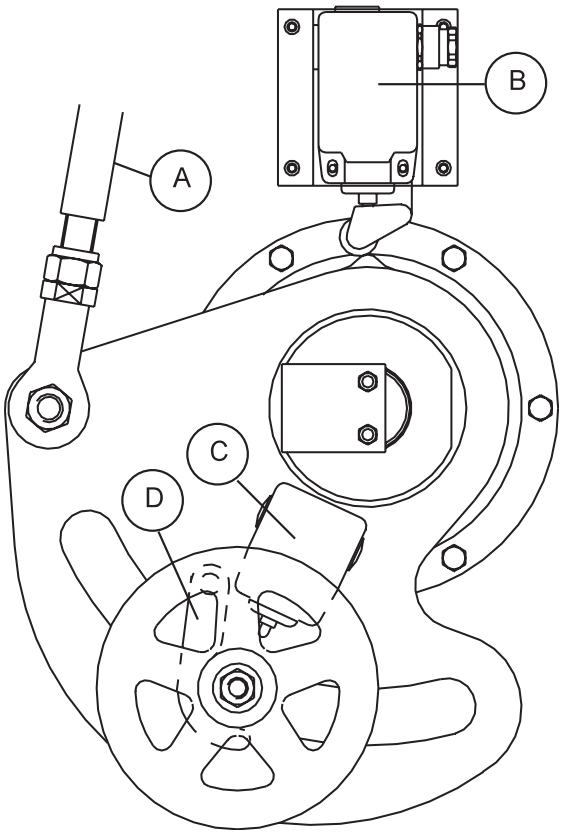

A) Pull rod connection from governor.

B) Stop indicator.

C) Emergency control indicator.

D) Blocking arm "Emergency control" - position.

E) Hollow shaft connected to regulating handwheel on emergency console.

F) Shaft connected to regulating arms on fuel pumps.

G) Keys and keyways.

H) Plate connected to regulating handwheel.

I) Plate connected to governor.

J) Plate connected to regulating shaft.

P) Impact handwheel. Changing from Remote to Emergency Control.

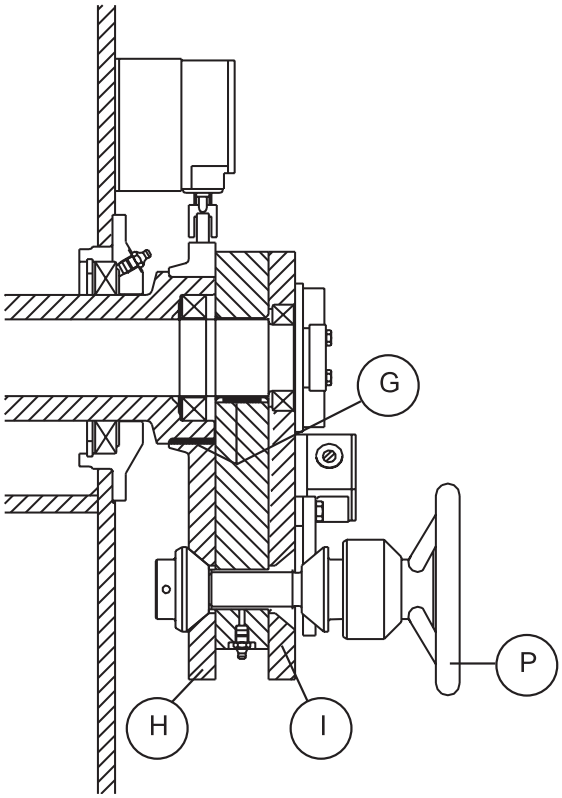

Emergency Control

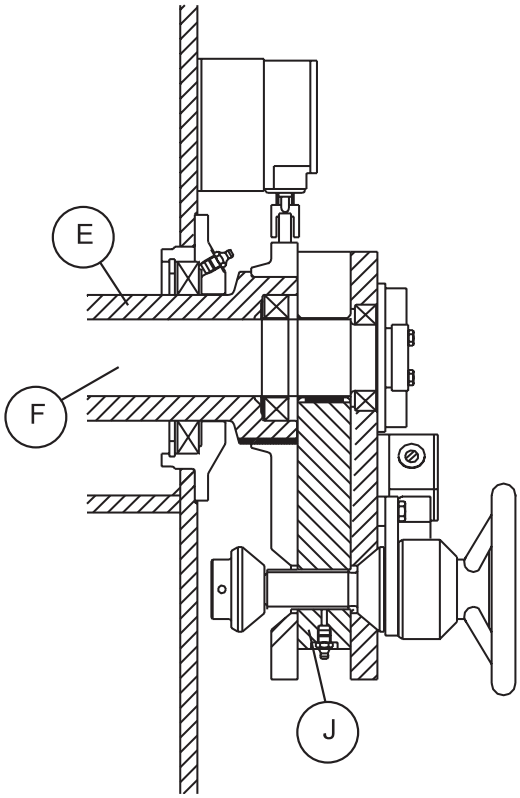

Remote Control

DRAWN	H.Uezono	MITSUI-MAN B&W MC ENGINES GUIDANCE ALARM LIMITS & MEASURING VALUES AT CONTINUOUS SERVICE (85%～100% M.C.O.)	No.	58	34
CHECKED			ME ４０１２G		
APPROVED					

Remarks:

1) Pressure measured position
   - ① Measured 1800 mm above the crankshaft center for main L.O. and piston cooling oil.
   - ② Measured at the turbocharger rotor center for turbocharger L.O.
   - ③ measured at each main pipe center except for ① and ②.
2) Reset value of the pressure switch is ±0.02 MPa of the alarm value.
3) Reset value of the temperature switch is ±5 °C of the alarm value.

三井造船株式会社　玉野事業所　ディーゼル設計部
MITSUI ENGINEERING AND SHIPBUILDING CO., LTD.
TAMANO WORKS
DIESEL ENGINE DESIGN DEPARTMENT

1. Fuel oil system

Type	Ident. No.	Description	Unit	Normal service value	Alarm		Slow down		Shut down	
					Low	High	Low	High	Low	High
Press.	8001	Fuel oil inlet	MPa	0.7 ~ 0.8	0.65					
Temp.	8005	Fuel oil inlet	°C	T a)	T – 5	T + 5				

a) T: to be adjusted depending on the fuel oil viscosity

2. Lubricating oil system

Type	Ident. No.	Description	Unit	Normal service value	Alarm		Slow down		Shut down	
					Low	High	Low	High	Low	High
Press.	8101	Camshaft L.O & Exhaust valve driving gear oil inlet	MPa	0.25 ~ 0.35	0.20 d)				0.15 d)	
〃	〃	Camshaft L.O inlet u)	MPa	0.15 ~ 0.25	0.12 d)		0.10 d)			
〃	〃	Exhaust valve driving gear oil inlet u)	MPa	0.25 ~ 0.35	0.20 d)		0.15 d)			
Press.	8103	Turbocharger L.O. inlet : TCA type	MPa	0.13 ~ 0.22	0.10				0.06	
〃	〃	〃 : NA type	MPa	0.13 ~ 0.22	0.10				0.06	
〃	〃	〃 : TPL type	MPa	0.09 ~ 0.25	0.08				0.06	
〃	〃	〃 : MET type	MPa	0.07 ~ 0.15	0.06				0.04	
Temp.	8106	Thrust bearing segment	°C	55 ~ 65		70		75 b)		
〃	8107	〃	°C							85

(continued – Lubricating oil system)

Type	Ident. No.	Description	Unit	Normal service value	Alarm		Slow down		Shut down	
					Low	High	Low	High	Low	High
Press.	8108	Main L.O. inlet : S80MC-C	MPa	0.22 ~ 0.29	0.18 c)		0.16 c)			
〃	8109	〃 : 〃	MPa						0.14 c)	
Press.	8108	〃 : K60MC-C	MPa	0.21 ~ 0.29	0.17 c)		0.15 c)			
〃	8109	〃 : 〃	MPa						0.13 c)	
Press.	8108	〃 : S70MC-C	MPa	0.22 ~ 0.29	0.18 c)		0.16 c)			
〃	8109	〃 : 〃	MPa						0.14 c)	
Press.	8108	〃 : S70MC	MPa	0.21 ~ 0.29	0.17 c)		0.15 c)			
〃	8109	〃 : 〃	MPa						0.13 c)	
Press.	8108	〃 : S60MC-C, S60MC	MPa	0.21 ~ 0.28	0.17 c)		0.15 c)			
〃	8109	〃 : 〃	MPa						0.13 c)	
Press.	8108	〃 : S50MC-C, S50MC	MPa	0.20 ~ 0.28	0.16 c)		0.14 c)			
〃	8109	〃 : 〃	MPa						0.12 c)	

(continued – Lubricating oil system)

Type	Ident. No.	Description	Unit	Normal service value	Alarm		Slow down		Shut down	
					Low	High	Low	High	Low	High
Temp.	8110	Piston cooling oil inlet	°C	40 ~ 47	35	55		60		
Press.	8111	Piston cooling oil inlet : S80MC-C	MPa	0.22 ~ 0.29	0.18 c)		0.16 c)			
〃	〃	〃 : K80MC-C	MPa	0.21 ~ 0.29	0.19 c)		0.15 c)			
〃	〃	〃 : S70MC-C	MPa	0.22 ~ 0.29	0.18 c)		0.16 c)			
〃	〃	〃 : S70MC	MPa	0.21 ~ 0.29	0.19 c)		0.15 c)			
〃	〃	〃 : S60MC-C, S60MC	MPa	0.21 ~ 0.28	0.19 c)		0.15 c)			
〃	〃	〃 : S50MC-C, S50MC	MPa	0.20 ~ 0.28	0.18 c)		0.14 c)			
Temp.	8112	Main L.O. inlet	°C	40 ~ 47	35	55		60		
Temp.	8113	Piston cooling oil outlet / cyl.	°C	50 ~ 65		70		75		
Temp.	8115	Camshaft L.O. inlet	°C	40 ~ 47						
Temp.	8117	Turbocharger L.O. outlet : TCA type	°C	55 ~ 80		85				
〃	〃	〃 : NA TYPE	°C	55 ~ 80		85				
〃	〃	〃 : TPL type	°C	60 ~ 95		110		120 b)		
〃	〃	〃 : MET type	°C	55 ~ 80		85				
〃	〃	Turbocharger L.O : VTR type	°C	60 ~ 95		110		120 b)		
Temp.	8118	Main L.O. outlet (Main L.O. cooler inlet)	°C	50 ~ 60		65				

(continued – Lubricating oil system)

Type	Ident. No.	Description	Unit	Normal service value	Alarm		Slow down		Shut down	
					Low	High	Low	High	Low	High
Temp.	8120	Main bearing metal	°C	50 ~ 70		75		80 b)		
Temp.	8121	Crankpin bearing metal	°C	50 ~ 70		75		80 b)		
Temp.	8122	Crosshead bearing metal	°C	50 ~ 70		75		80 b)		
Temp.	8123	L.O. outlet from main bearing Deviation from average	°C °C	50 ~ 60	 –5	65 +5	 –7	70 +7		
Temp.	8124	L.O. outlet from crankpin bearing Deviation from average	°C °C	50 ~ 60	 –5	65 +5	 –7	70 +7		
Temp.	8125	L.O. outlet from crosshead bearing Deviation from average	°C °C	50 ~ 60	 –5	65 +5	 –7	70 +7		

b) If the setting value of “slow down” can not be set independently, it can be set the same as those of “alarm max. value”.

c) To use the timer against the instantaneous variation of value. Timer setting : Max. 3 sec.

d) To use the timer against the instantaneous variation of value. Timer setting : Max. 3 sec.

e) Pressure loss across the L.O. filter is to be 0.02 ~ 0.03 MPa at normal service, and the max. permissible pressure loss is to be 0.05 MPa.

u) For the engine of which only exhaust valve driving gear oil supplied via booster pump (S50MC-C, S60MC-C, S70MC-C)

3. Cylinder lubricating oil system (with Alpha Lubricator System : Option)

Type	Ident. No.	Description	Unit	Normal service value	Alarm		Slow down		Shut down	
					Low	High	Low	High	Low	High
Press.	8201	Cylinder lubricating oil (pump station outlet)	MPa	4.0 ~ 5.0	3.5					
Temp.	8202	Cylinder lubricating oil (in pump station tank)	°C	30 ~ 60		70				

4. Cooling water system

Type	Ident. No.	Description	Unit	Normal service value	Alarm		Slow down		Shut down	
					Low	High	Low	High	Low	High
Press.	8401	Jacket cooling fresh water inlet : 80 ~ 70 MC/MC-C h)	MPa	0.25 ~ 0.45	0.20 g)		0.15 g)			
〃	〃	〃 : 60 ~ 50 MC/MC-C h)	MPa	0.20 ~ 0.40	0.15 g)		0.12 g)			
Press.	8403	Jacket cooling fresh water pressure difference in/out	MPa	0.06	0.04		0.02			
Temp.	8407	Jacket cooling fresh water inlet	°C		60	80				
Temp.	8408	Jacket cooling fresh water outlet / cyl.	°C	80 ~ 85		90		95 f)		
Temp.	8409	Cooling fresh water outlet, T/C bearing : NA/T type	°C	80 ~ 85		90				
Press.	8421	Air cooler cooling water inlet : sea water	MPa	0.1 ~ 0.2	0.05	0.35				
〃	〃	〃 : fresh water	MPa	0.35 ~ 0.45	0.30	0.55				
Temp.	8422	Air cooler cooling water inlet : sea water	°C	10 ~ 32		40				
〃	〃	〃 : fresh water	°C	10 ~ 38		40				
Temp.	8423	Air cooler cooling water outlet : sea water	°C	i)		55				
〃	〃	〃 : fresh water	°C	j)		65				

f) If the setting value of “slow down” can not be set independently, it can be set the same as those of “alarm max. value”.

g) To use the timer against the instantaneous variation of value. Timer setting : Max. 10 sec.

h) Figures changes depending on the height of expansion tank.

i) For sea water cooling; the temperature difference between the cooling water inlet and outlet should not exceed 20°C.

j) For fresh water cooling; the temperature difference between the cooling water inlet and outlet should not exceed 27°C.

5. Compressed air system

Type	Ident. No.	Description	Unit	Normal service value	Alarm		Slow down		Shut down	
					Low	High	Low	High	Low	High
Press.	8503	Control air inlet	MPa	0.65 ~ 0.75	0.55 k)					
Press.	8504	Safety air inlet	MPa	0.65 ~ 0.75	0.55 k)					
Press.	8505	Exhaust valve spring air inlet	MPa	0.65 ~ 0.75	0.55 k)					

k) To use the timer against the instantaneous variation of value. Timer setting : Max. 10 sec.

6. Scavenge air system

Type	Ident. No.	Description	Unit	Normal service value	Alarm		Slow down		Shut down	
					Low	High	Low	High	Low	High
Press. diff.	8606	Pressure loss of scavenge air cooler air side				n)				
Press. diff.	8607	Pressure loss of turbocharger filter				p)				
Temp.	8609	Scavenge air receiver	°C	air cooler cooling water inlet +10 ~ +15		55				
Temp.	8610	Fire detector for scavenge box / cyl.	°C			90		120 m)		

m) If the setting value of “slow down” can not be set independently, it can be set the same as those of “alarm max. value”.

n) Alarm value is to be 150% of the pressure loss at the shop trial.

p) Alarm value is to be 150% of the pressure loss at the shop trial.

7. Exhaust gas system

Type	Ident. No.	Description	Unit	Normal service value	Alarm		Slow down		Shut down	
					Low	High	Low	High	Low	High
Temp.	8701	Exhaust gas turbocharger inlet	°C	330 ~ 430 s)		t)				
Temp.	8702	Exhaust gas outlet / cyl. Deviation from average r)	°C °C	250 ~ 375 s)	200 –50	430 +50	 –60	450 q) +60		
Temp.	8707	Exhaust gas turbocharger outlet	°C	225 ~ 280 s)		350				

q) If the setting value of “slow down” can not be set independently, it can be set the same as those of “alarm max. value”.

r) When operating on below 50% LOAD (73.8% SPEED), deviation alarm is cut off.

s) The exhaust gas temperature is based on the following conditions:

Ambient temperature 25°C, Air cooler cooling water inlet temperature 25°C

t) T/C dependent

DRAWN	H.Uezono	MITSUI-MAN B&W MC ENGINES GUIDANCE ALARM LIMITS & MEASURING VALUES AT CONTINUOUS SERVICE (85%～100% M.C.O.)	No.	58	35
CHECKED			ME ４０１３G		
APPROVED					

Remarks:

1) Pressure measured position
   - ① Measured 1800 mm above the crankshaft center for main L.O. and piston cooling oil.
   - ② Measured at the turbocharger rotor center for turbocharger L.O.
   - ③ measured at each main pipe center except for ① and ②.
2) Reset value of the pressure switch is ±0.02 MPa of the alarm value.
3) Reset value of the temperature switch is ±5 °C of the alarm value.

三井造船株式会社　玉野事業所　ディーゼル設計部
MITSUI ENGINEERING AND SHIPBUILDING CO., LTD.
TAMANO WORKS
DIESEL ENGINE DESIGN DEPARTMENT

1. Fuel oil system

Type	Ident. No.	Description	Unit	Normal service value	Alarm		Slow down		Shut down	
					Low	High	Low	High	Low	High
Press.	8001	Fuel oil inlet	MPa	0.7 ~ 0.8	0.65					
Temp.	8005	Fuel oil inlet	°C	T a)	T – 5	T + 5				

a) T: to be adjusted depending on the fuel oil viscosity

2. Lubricating oil system

Type	Ident. No.	Description	Unit	Normal service value	Alarm		Slow down		Shut down	
					Low	High	Low	High	Low	High
Press.	8101	Camshaft L.O inlet	MPa	0.15 ~ 0.25	0.12 d)		0.10 d)			
Press.	8103	Turbocharger L.O. inlet : TCA type	MPa	0.13 ~ 0.22	0.10				0.06	
〃	〃	〃 : NA type	MPa	0.13 ~ 0.22	0.10				0.06	
〃	〃	〃 : TPL type	MPa	0.09 ~ 0.25	0.08				0.06	
〃	〃	〃 : MET type	MPa	0.07 ~ 0.15	0.06				0.04	
Temp.	8106	Thrust bearing segment	°C	55 ~ 65		70		75 b)		
〃	8107	〃	°C							85
Temp.	8106	Thrust bearing segment : 90MC-C/98MC/98MC-C	°C	60 ~ 70		75		80 b)		
〃	8107	〃 : 〃	°C							90

(continued – Lubricating oil system)

Type	Ident. No.	Description	Unit	Normal service value	Alarm		Slow down		Shut down	
					Low	High	Low	High	Low	High
Press.	8108	Main L.O. inlet : K98MC	MPa	0.23 ~ 0.29	0.19 c)		0.17 c)			
〃	8109	〃 : 〃	MPa						0.15 c)	
Press.	8108	〃 : K98MC-C	MPa	0.22 ~ 0.29	0.18 c)		0.16 c)			
〃	8109	〃 : 〃	MPa						0.14 c)	
Press.	8108	〃 : S90MC-C	MPa	0.23 ~ 0.29	0.19 c)		0.17 c)			
〃	8109	〃 : 〃	MPa						0.15 c)	
Press.	8108	〃 : K90MC-C	MPa	0.22 ~ 0.29	0.18 c)		0.16 c)			
〃	8109	〃 : 〃	MPa						0.14 c)	
Press.	8108	〃 : S80MC-C	MPa	0.22 ~ 0.29	0.18 c)		0.16 c)			
〃	8109	〃 : 〃	MPa						0.14 c)	
Press.	8108	〃 : K60MC-C	MPa	0.21 ~ 0.29	0.17 c)		0.15 c)			
〃	8109	〃 : 〃	MPa						0.13 c)	
Press.	8108	〃 : S70MC-C	MPa	0.22 ~ 0.29	0.18 c)		0.16 c)			
〃	8109	〃 : 〃	MPa						0.14 c)	
Press.	8108	〃 : S70MC	MPa	0.21 ~ 0.29	0.17 c)		0.15 c)			
〃	8109	〃 : 〃	MPa						0.13 c)	
Press.	8108	〃 : L70MC-C	MPa	0.21 ~ 0.29	0.17 c)		0.15 c)			
〃	8109	〃 : 〃	MPa						0.13 c)	

(continued – Lubricating oil system)

Type	Ident. No.	Description	Unit	Normal service value	Alarm		Slow down		Shut down	
					Low	High	Low	High	Low	High
Press.	8108	Main L.O. inlet : S60MC-C, S60MC, L60MC-C	MPa	0.21 ~ 0.28	0.17 c)		0.15 c)			
〃	8109	〃 : 〃	MPa						0.13 c)	
Press.	8108	〃 : S50MC-C, S50MC	MPa	0.20 ~ 0.28	0.16 c)		0.14 c)			
〃	8109	〃 : 〃	MPa						0.12 c)	
Press.	8108	〃 : S46MC-C, S42MC	MPa	0.20 ~ 0.24	0.16 c)		0.14 c)			
〃	8109	〃 : 〃	MPa						0.12 c)	
Press.	8108	〃 : S35MC	MPa	0.19 ~ 0.23	0.15 c)		0.13 c)			
〃	8109	〃 : 〃	MPa						0.11 c)	
Press.	8108	〃 : L35MC	MPa	0.18 ~ 0.22	0.14 c)		0.12 c)			
〃	8109	〃 : 〃	MPa						0.10 c)	
Temp.	8110	Piston cooling oil inlet	°C	40 ~ 47	35	55		60		
Press.	8111	Piston cooling oil inlet : K98MC	MPa	0.23 ~ 0.29	0.19 c)		0.17 c)			
〃	〃	〃 : K98MC-C	MPa	0.22 ~ 0.29	0.18 c)		0.16 c)			
〃	〃	〃 : S90MC-C	MPa	0.23 ~ 0.29	0.19 c)		0.17 c)			
〃	〃	〃 : K90MC-C	MPa	0.22 ~ 0.29	0.20 c)		0.16 c)			
〃	〃	〃 : S80MC-C	MPa	0.22 ~ 0.29	0.18 c)		0.16 c)			
〃	〃	〃 : K80MC-C	MPa	0.21 ~ 0.29	0.19 c)		0.15 c)			
〃	〃	〃 : S70MC-C	MPa	0.22 ~ 0.29	0.18 c)		0.16 c)			
〃	〃	〃 : S70MC	MPa	0.21 ~ 0.29	0.19 c)		0.15 c)			
〃	〃	〃 : L70MC-C	MPa	0.21 ~ 0.29	0.17 c)		0.15 c)			

(continued – Lubricating oil system)

Type	Ident. No.	Description	Unit	Normal service value	Alarm		Slow down		Shut down	
					Low	High	Low	High	Low	High
Press.	8111	Piston cooling oil inlet : S60MC-C, S60MC, L60MC-C	MPa	0.21 ~ 0.28	0.19 c)		0.15 c)			
〃	〃	〃 : S50MC-C, S50MC	MPa	0.20 ~ 0.28	0.18 c)		0.14 c)			
〃	〃	〃 : S46MC-C, S42MC	MPa	0.20 ~ 0.24	0.18 c)		0.14 c)			
〃	〃	〃 : S35MC	MPa	0.19 ~ 0.23	0.17 c)		0.13 c)			
〃	〃	〃 : L35MC	MPa	0.18 ~ 0.22	0.16 c)		0.12 c)			
Temp.	8112	Main L.O. inlet	°C	40 ~ 47	35	55		60		
Temp.	8113	Piston cooling oil outlet / cyl.	°C	50 ~ 65		70		75		
Temp.	8115	Camshaft L.O. inlet	°C	40 ~ 47						
Temp.	8117	Turbocharger L.O. outlet : TCA type	°C	55 ~ 80		85				
〃	〃	〃 : NA TYPE	°C	55 ~ 80		85				
〃	〃	〃 : TPL type	°C	60 ~ 95		110		120 b)		
〃	〃	〃 : MET type	°C	55 ~ 80		85				
〃	〃	Turbocharger L.O : VTR type	°C	60 ~ 95		110		120 b)		
Temp.	8118	Main L.O. outlet (Main L.O. cooler inlet)	°C	50 ~ 60		65				

(continued – Lubricating oil system)

Type	Ident. No.	Description	Unit	Normal service value	Alarm		Slow down		Shut down	
					Low	High	Low	High	Low	High
Temp.	8120	Main bearing metal	°C	50 ~ 70		75		80 b)		
Temp.	8121	Crankpin bearing metal	°C	50 ~ 70		75		80 b)		
Temp.	8122	Crosshead bearing metal	°C	50 ~ 70		75		80 b)		
Temp.	8123	L.O. outlet from main bearing Deviation from average	°C °C	50 ~ 60	 –5	65 +5	 –7	70 +7		
Temp.	8124	L.O. outlet from crankpin bearing Deviation from average	°C °C	50 ~ 60	 –5	65 +5	 –7	70 +7		
Temp.	8125	L.O. outlet from crosshead bearing Deviation from average	°C °C	50 ~ 60	 –5	65 +5	 –7	70 +7		

b) If the setting value of “slow down” can not be set independently, it can be set the same as those of “alarm max. value”.

c) To use the timer against the instantaneous variation of value. Timer setting : Max. 3 sec.

d) To use the timer against the instantaneous variation of value. Timer setting : Max. 3 sec.

e) Pressure loss across the L.O. filter is to be 0.02 ~ 0.03 MPa at normal service, and the max. permissible pressure loss is to be 0.05 MPa.

3. Cylinder lubricating oil system (with Alpha Lubricator System : Option)

Type	Ident. No.	Description	Unit	Normal service value	Alarm		Slow down		Shut down	
					Low	High	Low	High	Low	High
Press.	8201	Cylinder lubricating oil (pump station outlet)	MPa	4.0 ~ 5.0	3.5					
Temp.	8202	Cylinder lubricating oil (in pump station tank)	°C	30 ~ 60		70				

4. Cooling water system

Type	Ident. No.	Description	Unit	Normal service value	Alarm		Slow down		Shut down	
					Low	High	Low	High	Low	High
Press.	8401	Jacket cooling fresh water inlet : 98 ~ 70 MC/MC-C h)	MPa	0.25 ~ 0.45	0.20 g)		0.15 g)			
〃	〃	〃 : 60 ~ 35 MC/MC-C h)	MPa	0.20 ~ 0.40	0.15 g)		0.12 g)			
Press.	8403	Jacket cooling fresh water pressure difference in/out	MPa	0.06	0.04		0.02			
Temp.	8407	Jacket cooling fresh water inlet	°C		60	80				
Temp.	8408	Jacket cooling fresh water outlet / cyl.	°C	80 ~ 85		90		95 f)		
Temp.	8409	Cooling fresh water outlet, T/C bearing : NA/T type	°C	80 ~ 85		90				
Press.	8421	Air cooler cooling water inlet : sea water	MPa	0.1 ~ 0.2	0.05	0.35				
〃	〃	〃 : fresh water	MPa	0.35 ~ 0.45	0.30	0.55				
Temp.	8422	Air cooler cooling water inlet : sea water	°C	10 ~ 32		40				
〃	〃	〃 : fresh water	°C	10 ~ 38		40				
Temp.	8423	Air cooler cooling water outlet : sea water	°C	i)		55				
〃	〃	〃 : fresh water	°C	j)		65				

f) If the setting value of “slow down” can not be set independently, it can be set the same as those of “alarm max. value”.

g) To use the timer against the instantaneous variation of value. Timer setting : Max. 10 sec.

h) Figures changes depending on the height of expansion tank.

i) For sea water cooling; the temperature difference between the cooling water inlet and outlet should not exceed 20°C.

j) For fresh water cooling; the temperature difference between the cooling water inlet and outlet should not exceed 27°C.

5. Compressed air system

Type	Ident. No.	Description	Unit	Normal service value	Alarm		Slow down		Shut down	
					Low	High	Low	High	Low	High
Press.	8503	Control air inlet	MPa	0.65 ~ 0.75	0.55 k)					
Press.	8504	Safety air inlet	MPa	0.65 ~ 0.75	0.55 k)					
Press.	8505	Exhaust valve spring air inlet	MPa	0.65 ~ 0.75	0.55 k)					

k) To use the timer against the instantaneous variation of value. Timer setting : Max. 10 sec.

6. Scavenge air system

Type	Ident. No.	Description	Unit	Normal service value	Alarm		Slow down		Shut down	
					Low	High	Low	High	Low	High
Press. diff.	8606	Pressure loss of scavenge air cooler air side				n)				
Press. diff.	8607	Pressure loss of turbocharger filter				p)				
Temp.	8609	Scavenge air receiver	°C	air cooler cooling water inlet +10 ~ +15		55				
Temp.	8610	Fire detector for scavenge box / cyl.	°C			90		120 m)		

m) If the setting value of “slow down” can not be set independently, it can be set the same as those of “alarm max. value”.

n) Alarm value is to be 150% of the pressure loss at the shop trial.

p) Alarm value is to be 150% of the pressure loss at the shop trial.

7. Exhaust gas system

Type	Ident. No.	Description	Unit	Normal service value	Alarm		Slow down		Shut down	
					Low	High	Low	High	Low	High
Temp.	8701	Exhaust gas turbocharger inlet	°C	330 ~ 430 s)		t)				
〃	〃	〃 : S42MC, S35MC, L35MC	°C	330 ~ 450 s)		t)				
Temp.	8702	Exhaust gas outlet / cyl.	°C	250 ~ 375 s)	200	430		450 q)		
		〃 : S42MC, S35MC, L35MC	°C	250 ~ 400 s)	200	430		450 q)		
		Deviation from average r)	°C		–50	+50	–60	+60		
Temp.	8707	Exhaust gas turbocharger outlet	°C	225 ~ 280 s)		350				
〃	〃	〃 : S42MC, S35MC, L35MC	°C	225 ~ 300 s)		350				

q) If the setting value of “slow down” can not be set independently, it can be set the same as those of “alarm max. value”.

r) When operating on below 50% LOAD (73.8% SPEED), deviation alarm is cut off.

s) The exhaust gas temperature is based on the following conditions:
Ambient temperature 25°C, Air cooler cooling water inlet temperature 25°C

t) T/C dependent

DRAWN	H.Uezono	MITSUI-MAN B&W S26MC Mark6 GUIDANCE ALARM LIMITS & MEASURING VALUES AT CONTINUOUS SERVICE (85%～100% M.C.O.)	No.	58	19
CHECKED			ME 3174K		
APPROVED					

Remarks:

1) Pressure measured position
   - ① Measured 1800 mm above the crankshaft center for main L.O. and piston cooling oil.
   - ② Measured at the turbocharger rotor center for turbocharger L.O.
   - ③ measured at each main pipe center except for ① and ②.
2) Reset value of the pressure switch is ±0.02 MPa of the alarm value.
3) Reset value of the temperature switch is ±5 °C of the alarm value.

三井造船株式会社　玉野事業所　ディーゼル設計部
MITSUI ENGINEERING AND SHIPBUILDING CO., LTD.
TAMANO WORKS
DIESEL ENGINE DESIGN DEPARTMENT

1. Fuel oil system

Type	Ident. No.	Description	Unit	Normal service value	Alarm		Slow down		Shut down	
					Low	High	Low	High	Low	High
Press.	8001	Fuel oil inlet	MPa	0.7 ~ 0.8	0.65					
Temp.	8005	Fuel oil inlet	°C	T a)	T – 5	T + 5				

a) T: to be adjusted depending on the fuel oil viscosity

2. Lubricating oil system

Type	Ident. No.	Description	Unit	Normal service value	Alarm		Slow down		Shut down	
					Low	High	Low	High	Low	High
Press.	8103	Turbocharger L.O. inlet : TPL type	MPa	0.09 ~ 0.25	0.08				0.06	
〃	〃	〃 : MET type	MPa	0.07 ~ 0.15	0.06				0.04	
Temp.	8106	Thrust bearing segment	°C	55 ~ 65		70		75 b)		
〃	8107	〃	°C							85
Press.	8108	Main L.O. inlet	MPa	0.18 ~ 0.22	0.14 c)		0.12 c)			
〃	8109	〃	MPa						0.10 c)	
Temp.	8110	Piston cooling oil inlet	°C	40 ~ 47	35	55		60		
Press.	8111	Piston cooling oil inlet	MPa	0.15 ~ 0.19	0.11 c)		0.09 c)			
Temp.	8112	Main L.O. inlet	°C	40 ~ 47	35	55		60		
Temp.	8113	Piston cooling oil outlet / cyl.	°C	50 ~ 65		70		75		
Temp.	8117	Turbocharger L.O. outlet : TPL type	°C	60 ~ 95		110		120 b)		
〃	〃	〃 : MET type	°C	55 ~ 80		85				
Temp.	8118	Main L.O. outlet (Main L.O. cooler inlet)	°C	50 ~ 70		75				

(continued – Lubricating oil system)

Type	Ident. No.	Description	Unit	Normal service value	Alarm		Slow down		Shut down	
					Low	High	Low	High	Low	High
Temp.	8120	Main bearing metal	°C	50 ~ 70		75		80 b)		
Temp.	8121	Crankpin bearing metal	°C	50 ~ 70		75		80 b)		
Temp.	8122	Crosshead bearing metal	°C	50 ~ 70		75		80 b)		
Temp.	8123	L.O. outlet from main bearing Deviation from average	°C °C	50 ~ 60	 –5	65 +5	 –7	70 +7		
Temp.	8124	L.O. outlet from crankpin bearing Deviation from average	°C °C	50 ~ 60	 –5	65 +5	 –7	70 +7		
Temp.	8125	L.O. outlet from crosshead bearing Deviation from average	°C °C	50 ~ 60	 –5	65 +5	 –7	70 +7		

b) If the setting value of “slow down” can not be set independently, it can be set the same as those of “alarm max. value”.

c) To use the timer against the instantaneous variation of value. Timer setting : Max. 3 sec.

d) To use the timer against the instantaneous variation of value. Timer setting : Max. 3 sec.

e) Pressure loss across the L.O. filter is to be 0.02 ~ 0.03 MPa at normal service, and the max. permissible pressure loss is to be 0.05 MPa.

3. Cylinder lubricating oil system (with Alpha Lubricator System : Option)

Type	Ident. No.	Description	Unit	Normal service value	Alarm		Slow down		Shut down	
					Low	High	Low	High	Low	High
Press.	8201	Cylinder lubricating oil (pump station outlet)	MPa	4.0 ~ 5.0	3.5					
Temp.	8202	Cylinder lubricating oil (in pump station tank)	°C	30 ~ 60		70				

4. Cooling water system

Type	Ident. No.	Description	Unit	Normal service value	Alarm		Slow down		Shut down	
					Low	High	Low	High	Low	High
Press.	8401	Jacket cooling fresh water inlet h)	MPa	0.20 ~ 0.40	0.15 g)		0.12 g)			
Press.	8403	Jacket cooling fresh water pressure difference in/out	MPa	0.06	0.04		0.02			
Temp.	8407	Jacket cooling fresh water inlet	°C		60	80				
Temp.	8408	Jacket cooling fresh water outlet / cyl.	°C	80 ~ 85		90		95 f)		
Press.	8421	Air cooler cooling water inlet : sea water	MPa	0.1 ~ 0.2	0.05	0.35				
〃	〃	〃 : fresh water	MPa	0.35 ~ 0.45	0.30	0.55				
Temp.	8422	Air cooler cooling water inlet : sea water	°C	10 ~ 32		40				
〃	〃	〃 : fresh water	°C	10 ~ 38		40				
Temp.	8423	Air cooler cooling water outlet : sea water	°C	i)		55				
〃	〃	〃 : fresh water	°C	j)		65				

f) If the setting value of “slow down” can not be set independently, it can be set the same as those of “alarm max. value”.

g) To use the timer against the instantaneous variation of value. Timer setting : Max. 10 sec.

h) Figures changes depending on the height of expansion tank.

i) For sea water cooling; the temperature difference between the cooling water inlet and outlet should not exceed 20°C.

j) For fresh water cooling; the temperature difference between the cooling water inlet and outlet should not exceed 27°C.

5. Compressed air system

Type	Ident. No.	Description	Unit	Normal service value	Alarm		Slow down		Shut down	
					Low	High	Low	High	Low	High
Press.	8503	Control air inlet	MPa	0.65 ~ 0.75	0.55 k)					
Press.	8504	Safety air inlet	MPa	0.65 ~ 0.75	0.55 k)					
Press.	8505	Exhaust valve spring air inlet	MPa	0.65 ~ 0.75	0.55 k)					

k) To use the timer against the instantaneous variation of value. Timer setting : Max. 10 sec.

6. Scavenge air system

Type	Ident. No.	Description	Unit	Normal service value	Alarm		Slow down		Shut down	
					Low	High	Low	High	Low	High
Press. diff.	8606	Pressure loss of scavenge air cooler air side				n)				
Press. diff.	8607	Pressure loss of turbocharger filter				p)				
Temp.	8609	Scavenge air receiver	°C	air cooler cooling water inlet +10 ~ +15		55				
Temp.	8610	Fire detector for scavenge box / cyl.	°C			90		120 m)		

m) If the setting value of “slow down” can not be set independently, it can be set the same as those of “alarm max. value”.

n) Alarm value is to be 150% of the pressure loss at the shop trial.

p) Alarm value is to be 150% of the pressure loss at the shop trial.

7. Exhaust gas system

Type	Ident. No.	Description	Unit	Normal service value	Alarm		Slow down		Shut down	
					Low	High	Low	High	Low	High
Temp.	8701	Exhaust gas turbocharger inlet	°C	350 ~ 450 s)		t)				
Temp.	8702	Exhaust gas outlet / cyl. Deviation from average r)	°C °C	320 ~ 370 s)	200 –50	430 +50	 –60	450 q) +60		
Temp.	8707	Exhaust gas turbocharger outlet	°C	240~ 300 s)		350				

q) If the setting value of “slow down” can not be set independently, it can be set the same as those of “alarm max. value”.

r) When operating on below 50% LOAD (73.8% SPEED), deviation alarm is cut off.

s) The exhaust gas temperature is based on the following conditions:

Ambient temperature 25°C, Air cooler cooling water inlet temperature 25°C

t) T/C dependent

701 SAFETY PRECAUTIONS AND ENGINE DATA

702 CHECKS DURING STANDSTILL PERIODS

703 STARTING, MANOEUVRING AND RUNNING

704 SPECIAL RUNNING CONDITINS

705 FUEL AND FUEL TREATMENT

706 PERFORMANCE EVALUATION & GENERAL OPERATION

707 CYLINDER CONDITION

708 BEARING AND CIRCULATING OIL

709 WATER COOLING SYSTEM

710 DATA

Chapter 704
Special Running Conditions

Contents Page

Fire in Scavenge Air Box

1. Cause 704-03
2. Warnings of Fire 704-04
3. Measures to be taken 704-04
4. Scavenge Air Drain Pipes 704-05
   - 4.1 Daily Check with the Engine Running 704-05
   - 4.2 Cleaning of Drain Pipes at Regular Intervals 704-06

Ignition in Crankcase

1. Cause 704-07
   - A. "Hot spots" in Crankcase 704-07
   - B. Oil Mist in Crankcase 704-08
2. Measures to be taken when Oil Mist has occurred 704-08

Turbocharger Surging

1. General 704-11
2. Causes 704-11
   - 2.1 Fuel Oil System 704-11
   - 2.2 Exhaust System 704-11
   - 2.3 Turbochargers 704-12
   - 2.4 Scavenge Air System 704-12
   - 2.5 Miscellaneous 704-12
3. Countermeasure 704-12

Running with Cylinders or Turbochargers out of Operation

1. General 704-13
2. How to put Cylinders out of Operation 704-15
3. Starting after putting Cylinders out of Operation 704-17
4. Running with one Cylinder Misfiring 704-18
5. How to put Turbochargers out of Operation 704-19
6. Putting an Auxiliary Blower out of Operation 704-20
7. Low Load Operation 704-20

Contents Page

Plates

Cutting Cylinders out of Action	70401
Scavenge Air Drain Pipes	70402A
Scavenge Air Drain Pipes	70402B
Cutting Turbochargers out of Action	70403
Turbocharger Surging	70404
Scavenge Air Space, Fire Extinguishing Systems	70405

Appendix

Low Load Operation	ME3423

Fire in Scavenge Air Box

1. Cause

⚠ If flakes of burning or glowing carbon deposits drop into the oil sludge at the bottom of the scavenge air box, this sludge can be ignited and serious damage can be done to the piston rod and the scavenge air box walls, possibly reducing the tension of the staybolts.

Ignition of carbon deposits in the scavenge air box can be caused by:

- prolonged blow-by,
- "slow combustion" in the cylinder, due to incorrect atomisation, or "misaligned" fuel jets,
- "blow-back" through the scavenge air ports, due to an incorrectly adjusted exhaust cam disc or large resistance in the exhaust system (back pressure).

△ To keep the exhaust resistance low, heavy deposits must not be allowed to collect on protective gratings, nozzle rings and turbine blades, in addition the back pressure after the turbochargers must not exceed 3.5 kPa.

⚠ If the auxiliary blowers do not start during low-load running, on account of a fault, or the switch for the blowers not being in “AUTO”-position, unburned fuel oil may accumulate on top of the pistons.
This will involve the risk of a scavenge air box fire.

In order to avoid such fire:

1) Obtain permission to stop the engine.

2) Stop the engine.

3) Remove any unburned fuel oil from the top of the pistons.

4) Re-establish the supply of scavenge air.

5) Start the engine.

The switch for the auxiliary blowers should be in “AUTO”-position during all modes of engine control, i.e.;

- remote control,
- control from engine side control console.

2. Warnings of Fire

If the engine stops on shut-down or if the operator performs a safety stop, the auxiliary blowers are stopped independently of the operating mode (AUTO or MANUAL).

A fire in the scavenge box manifests itself by:

– an increase in the exhaust temperature of the affected cylinder,
– the turbochargers may surge,
– smoke from the turbocharger air inlet filters when the surging occurs,
– the scavenge air box being noticeably hotter.

If the fire is violent, smoky exhaust and decreasing engine speed will occur.

⚠ WARNING
Violent blow-by will cause smoke, sparks, and even flames to be blown out when the corresponding scavenge box drain cock is opened. Therefore keep clear of the line of injection.

Monitoring device should be installed in the scavenge air space which give alarm and slow-down at abnormal temperature increase for unattended machinery space.

3. Measures to be taken

⚠ WARNING
Owing to the possible risk of a crankcase explosion, do not stand near the relief valves. Flames can suddenly be violently emitted.

⚠ WARNING
Do not open the scavenge air box or crankcase before the site of the fire has cooled down to under 100 °C. When opening, keep clear of possible fresh spurts of flame.

1) Reduce speed to SLOW and ask bridge for permission to stop.

2) When the engine STOP order is received, stop the engine and switch-off the auxiliary blowers.

3) Stop the fuel oil supply.

4) Stop the lub. oil supply.

5) Put the scavenge air box fire extinguishing equipment into function.
To prevent the fire from spreading to adjacent cylinder(s), the ball valve of the neighbouring cylinder(s) should be opened in case of fire in one cylinder.

6) Remove dry deposits and sludge from all the scavenge air boxes.

7) Clean the respective piston rods and cylinder liners, and inspect their surface condition, alignment, and whether distorted.
If in order, coat with oil.
Continue checking while the engine is being turned (cooling oil and water on).
Inspect the stuffing box and bottom of scavenge box for possible cracks.

⚠ If a piston caused the fire, and this piston cannot be overhauled at once, take the precautions referred to in Chapter 703, "Starting-up, Manoeuvring and running", Item 4.2, Point 7.

If the scavenge air box walls have been heated considerably, the staybolts should be retightened at the first opportunity.

4. Scavenge Air Drain Pipes

See *Plate 70402A* and *70402B*.

△ To ensure proper draining of oil sludge from the scavenge air boxes, thereby reducing the risk of fire in the scavenge air boxes, it is recommended as follows:

4.1 Daily Checks with the Engine Running

1) Open the valves between the drain tank and the sludge tank.

2) Close the valves when the drain tank is empty.

3) Check the pipes from flange "DC" to the drain tank venting pipe:

Does air escape from the drain tank venting pipe?
YES: This indicates free passage from flange "DC" to the drain tank venting pipe.
NO: Clean the pipes as described below, at the first opportunity.

4) Check the pipes from the test-cooks to flange "DC":

Open the test cocks, one by one, between the main drain pipe and the scavenge air boxes and between the main drain pipe and the scavenge air receiver/auxiliary blowers.
Begin at flange "DC", and proceed towards flange "DE".

Use this procedure to locate any blocking.

Does air or oil blow-out from the individual test-cock?

AIR: The scavenge air space is being drained correctly.
This indicates free passage from the actual test-cock to flange "DC".

OIL: The scavenge air space is not being drained correctly.
This indicates that the main drain pipe is blocked between the test-cock which blows-out oil, and the neighbouring test-cock towards flange "DC".
Clean the drain pipe as described below, at the first opportunity.

4.2 Cleaning of Drain Pipes at Regular Intervals

The intervals should be determined for the actual plants, so as to prevent blocking-up of the drain system.

Clean the main drain pipe and the drain tank discharge pipe by applying steam or air during engine standstill.

⚠ If leaking valves are suspected, dismantle and clean the main pipe manually.

If steam is used, the risk of corrosion on the piston rods must be considered, if a valve is leaking.

1) Check that the valve between flange "DC" and the drain-tank is opened.

2) Close all valves between the main drain pipe and the scavenge air boxes, and between the main drain pipe and the scavenge air receiver/auxiliary blowers.

⚠ If steam is used, it is very important to close all valves, to prevent corrosion on the piston rods.

3) Open the valve at flange "DE" on the main drain pipe.

This channels the cleaning medium to the main drain pipe.

4) When the main drain pipe is sufficiently clean, open the valve between the drain tank and the sludge tank.

This will clean the drain tank discharge pipe.

5) When the drain tank discharge pipe is sufficiently clean, close the valve between the drain tank and the sludge tank.

6) Close the valve at flange "DE".

7) Finally, open all valves between the main drain pipe and the scavenge air boxes, and between the main drain pipe and the scavenge air receiver/auxiliary blowers.

Ignition in Crankcase

1. Cause

When the engine is running, the air in the crankcase contains the same types of gas (N_2-O_2-CO_2) in the same proportions as the ambient air, but there is also a heavy shower of coarse oil droplets that are flung around everywhere in the crankcase.

If abnormal friction occurs between the sliding surfaces, or heat is otherwise transmitted to the crankcase (for instance from a scavenge air fire via the piston rod/stuffing box, or through the intermediate bottom), "hot spots" can occur on the heated surfaces which in turn will cause the oil droplets falling on them to evaporate.

When the oil vapour condenses again, countless minute droplets are formed which are suspended in the air, i.e. a milky-white oil mist develops, which is able to feed and propagate a flame if ignition occurs.
The ignition can be caused by the same "hot spot" which caused the oil mist.

If a large amount of oil mist has developed before ignition, the burning can cause a tremendous rise of pressure in the crankcase (explosion), which forces a momentary opening of the relief valves.
In isolated cases, when the entire crankcase has presumably been filled with oil mist, the resulting explosion blows off the crankcase doors and sets fire to the engine room.

Similar explosions can also occur in the chain casing and scavenge air box.

⚠ Every precaution should therefore be taken to:
A. avoid “hot spots”
B. Detect oil mist in time.

A. "Hot Spots" in Crankcase

Well-maintained bearings only overheat if the oil supply fails, or if the bearing journal surfaces become too rough owing to the lubricating oil becoming corrosive, or being polluted by abrasive particles, refer to Chapter 708, “Bearings”, Item 6.
For these reasons, it is very important to:

– purify the oil correctly,
– make frequent control analyses,
– ensure that the filter gauze is maintained intact.

Due to the high frictional speed of the thrust bearing, special care has been taken to ensure the oil supply to this bearing.

Monitoring equipment is included to give an alarm in the event of low circulating oil pressure and/or high temperature.
Keep this equipment in tip-top condition.

Feel over moving parts (by hand or with a "thermo-feel") at suitable intervals (15 ~ 30 minutes after starting, one hour later, and again at full load, see Chapter 703, “Starting-up, Manoeuvring and running”, Item 3.2, “Checks during Loading”, check 9).

⚠ Check 2.1, Chapter 702, is still the best safeguard against "hot spots" when starting up after repairs or alterations affecting the moving parts, and should never be neglected. If in doubt, stop and feel over.

B. Oil Mist in Crankcase

In order to ensure a fast and reliable warning of oil mist formation in the crankcase, constant monitoring is provided using an "Oil Mist Detector", which samples air from each crankcase compartment.

The detector gives alarm (and slow-down) at a mist concentration which is less than the lower explosion limit, LEL, to gain time for stopping the engine before ignition of the oil mist can take place.

See also the instructions book “COMPONENT DESCRIPTION (ACCESSORIES)”.

2. Measures to be taken when Oil Mist has occurred

⚠ WARNING
Do not stand near crankcase doors or relief valves - nor in corridors near doors to the engine room casing in the event of an alarm for:

a) Oil mist,
b) High lube oil temperature,
c) Piston cooling oil non-flow,
d) Fire in scavenge air box.

Alarms b), c) and d) should be considered as pre-cautions of a possible increasing oil mist level.
See also Service Letter SL97-348/ERO and SL00-377/CEE, issued by MAN Diesel A/S.

⚠ WARNING
Do not open the crankcase until at least 30 minutes after stopping the engine. When opening up, keep clear of possible spurts of flame. Do not use naked lights and do not smoke.

1) Reduce speed to slow-down level.

2) Contact the bridge for permission to stop.

3) When engine STOP order is received, stop the engine and close the fuel oil supply.

4) Switch-off the auxiliary blowers and engine room ventilation.

5) Open the skylight(s) and/or "stores hatch".

6) Leave the engine room.

7) Lock the casing doors and keep away from them.

8) Prepare the fire-fighting equipment.

9) Stop the circulating oil pump.
Take off/open all the crankcase doors.
Cut off the starting air, and engage the turning gear.

10) Locate the "hot spot". (with powerful lamps from the start.)

⚠ Feel over, by hand or with a "thermo-feel", all the sliding surfaces (bearings, thrust bearing, piston rods, stuffing boxes, crossheads, telescopic pipes, vibration dampers, moment compensators, etc.).

Look for signs of squeezed-out bearing metal, and discoloration caused by heat (blistered paint, burnt oil, oxidised steel).
Keep possible bearing metal found at bottom of oil tray for later analysing.

11) Prevent further "hot spots" by preferably making a permanent repair.

Ensure that the respective sliding surfaces are in good condition.
Take special care to check that the circulating oil supply is in order.

12) The complete flame arrester of the relief valves should be replaced.

13) Start the circulating oil pump and turn the engine by means of the turning gear.

Check the oil flow from all bearings and spray nozzles in the crankcase, chain case and thrust bearing (Check 2.1, Chapter 702).
Check for possible leakages from pistons or piston rods.

14) Start the engine.
After:
- 15 ~ 30 minutes,
- one hour later,
- when full load is reached:

– Stop and feel over.
– Look for oil mist.

Especially feel over (by hand or with a "thermo-feel") the sliding surfaces which caused the overheating. See Chapter 703, "Starting-up, Manoeuvring and running", Item 3.2, Check 9.

15) In cases where it has not been possible to locate the "hot spot", the procedure according to point 10) above should be repeated and intensified until the cause of the oil mist has been found and remedied.

There is a possibility that the oil mist is due to "atomisation" of the circulating oil, caused by a jet of air/gas, e.g. by combination of the following:

– Stuffing box leakages (not air tight).
– Blow-by through a cracked piston crown or piston rod (with direct connection to crankcase via the cooling oil outlet pipes).
– An oil mist could also develop as a result of heat from a scavenge fire being transmitted down the piston rod or via the stuffing box.
Hot air jets or flames could also have passed through the stuffing box into the crankcase.

Turbocharger Surging

1. General

During normal operation, a few sporadic surges will often occur, e.g. at crash stop or other abrupt manoeuvrings.
Such surges are harmless, provided the turbocharger bearings are in a good condition.

⚠ Continuous surges must be avoided, as there is a risk of damaging the rotor, especially compressor blades.

All cases of turbocharger surging can be divided into three main categories:

1. Restriction and the fouling the air / gas system.
2. Malfunction in the fuel system.
3. Rapid variations in engine load.

However, for convenience, the points in the "check lists" below are grouped according to specific engine systems.
See also *Plate 70404*.

2. Causes

2.1 Fuel Oil System

- Low circulating or booster pump pressure
- Air in fuel oil
- Water in fuel oil
- Low preheating temperature
- Malfunctioning of deaerating valve on top of venting tank
- Defective suction valve
- Defective puncture valve
- Sticking fuel pump plunger
- Sticking fuel valve spindle
- Damaged fuel valve nozzle
- Defect in overflow valve in fuel return pipe
- Camshaft timing, faulty load distribution

2.2 Exhaust System

- Exhaust valve not opening correctly
- Damaged or blocked protective grating before turbocharger
- Increased back pressure after turbocharger
- Pressure pulsations after turbocharger
- Pressure pulsations in exhaust receiver
- Damaged compensator before turbocharger

2.3 Turbochargers

- Fouled or damaged turbine side
- Fouled or damaged compressor side
- Fouled air filter boxes
- Damaged silencer
- Bearing failure

2.4 Scavenge Air System

- Fouled air cooler, water mist catcher, and/or ducts
- Stopped water circulation to cooler
- Coke in scavenge ports
- Too high receiver temperature

2.5 Miscellaneous

- Hunting governor
- Rapid changes in engine load
- Too rapid speed change:
  a) when running on high load
  b) during manoeuvring
  c) at shut downs/slow downs
  d) when running ASTERN
  e) due to "propeller racing" in bad weather

3. Countermeasure

Continuous surging can be temporarily counteracted by "blowing-off" from the valve at the top of the air receiver.

⚠ However, when doing this the exhaust temperature will increase and must not be allowed to exceed the limit values.

Running with Cylinders or Turbochargers out of Operation

1. General

The engine is designed and balanced to run with all cylinders as well as all turbochargers working.
If a breakdown occurs which disables one or more cylinders, or turbochargers, repair should preferably be carried out immediately.

⚠ If this is not possible, the engine can be operated with one or more cylinders or turbochargers out of operation, but with reduced speed owing to the following:

a) As, in such cases, the air supply is no longer optimal, the thermal load will be higher.
Therefore, depending upon the actual circumstances, the engine will have to be operated according to the restrictions mentioned in Item 4 and 5.

⚠ The exhaust temperatures can sometimes be high at about 30 ~ 40% load, corresponding to 67 ~ 73% of MCR speed.
It may be necessary to avoid operating in this range.

b) Pressure pulsations may occur in the scavenge and exhaust receivers, which can give a reduced air supply to any one of the cylinders, and as a result cause the respective exhaust temperatures to increase.

The fuel index for these cylinders must therefore be reduced to keep the exhaust temperatures (after valves) below the value stated in Chapter 703, Appendix “Guidance Alarm Limits and Measuring Values”.

c) Since the turbochargers will be working outside their normal range, surging may occur.
This can generally be remedied by "blowing off" from the scavenge air receiver.
The increased temperature level caused by this must be compensated for by reducing the engine speed, until the exhaust temperatures are in accordance with the values stated in Chapter 703.

If more than one cylinder must be cut out of operation, and the engine has two or more turbochargers, it may be advantageous to cut out one of the turbochargers.

d) When cylinders are out of operation, governor hunting may occur.
When this happens, the fuel index must be limited by decreasing "MAX. LIMITER" on electronic governor.

Regarding the Woodward mechanical governor, the stop screw, mounted at the emergency control stand, see *Plate 70302*, is screwed slightly downwards, until the hunting just ceased.
Before this is carried out, measure or mark the position of the stop screw, so that it can be returned to the original position, when maximum fuel index is no longer needed.

e) With one or more cylinders out of operation, torsional vibrations, as well as other mechanical vibrations, may occur at certain engine speeds.

The standard torsional vibration calculations cover both normal running and misfiring of one cylinder conditions.

The latter leads to load limitations, see Item 4, which in most cases are irrespective of the torsional vibration conditions; additional restrictions may occur depending on the specific conditions.

△ The above mentioned calculations do not deal with the situation where reciprocating masses are removed from the engine or where the exhaust valve remains open. In such specific cases, the engine builder has to be contacted.

⚠ Should unusual noise or extreme vibrations occur at the chosen speed, the speed must be further reduced.
Because the engine is no longer in balance, increased stresses occur in crankshaft, chain and camshaft.

If no abnormal vibrations occur, the engine can usually be run for a short period (for instance some days) without suffering damage.

△ If the engine is to be run for a prolonged period with cylinders out of operation, the engine builder should always be contacted in order to obtain advice concerning possible recommended barred speed ranges.

When only the fuel for the respective cylinders is cut off, and the starting air connections remain intact, the engine is fully manoeuvrable.

In cases where the starting air supply has to be cut off to some cylinders, starting in all crankshaft positions cannot always be expected.

If the engine does not turn on starting air in a certain crankshaft position, it must be immediately started for a short period in the opposite direction, after which reversal is to be made to the required direction of rotation.
Should this not give the desired result, it will be necessary to turn the engine to a better starting position, by means of the turning gear.

⚠ Cut off the starting air before turning, and open the indicator cocks.

2. How to put Cylinders out of Operation

See the instruction book "MAINTENANCE", for the respective procedure.

The following Case (A ~ E) describe five different "methods" of putting a single cylinder out of operation.
The extent of the work to be carried out depends, of course, on the nature of the trouble.

⚠ In cases where the crosshead and crankpin bearing are operative, the oil inlet to the crosshead must not be blanked-off, as the bearings are lubricated through the crosshead.

A summary of the various cases in given on *Plate 70401*.

Case A: Combustion cut out.
Piston and exhaust valve gear still working compression on.

Reasons: Preliminary measure in the event of, for instance: blow-by at piston rings or exhaust valve; bearing failures which necessitate reduction of bearing load; faults in the injection system.

Procedure: Cut out the fuel pump by lifting and securing the roller guide.

⚠ Piston cooling oil and cylinder cooling water must not be cut off.

Case B: Combustion and compression cut out.
Piston still working in cylinder.

(This way can not be applied for L/S42, 35, 26MC engines.)

Reasons: This measure is permitted in an emergency where, for instance, water leaking from the cooling jacket/liner or cylinder cover.

Running with the above it must be superseded as soon as possible by the precautions mentioned under Case D or Case E.

Procedure:

1) Cut out the fuel pump by lifting and securing the roller guide.

2) Put the exhaust valve out of action and lock it in open position.
Shut-off the air supply to the exhaust valve, stop the lube oil pumps.
Dismantle and block the actuator oil pipe.
Restart the lube oil pumps.

3) Close the cooling water inlet and outlet valves for the cylinders.
If necessary, drain the cooling water spaces completely.

4) Dismantle the starting air pipe, and blank off the main pipe and the control air pipe for the pertaining cylinder.

⚠ When operating in this manner, the speed level should not exceed 55% of MCR speed (see below).

The joints in the crosshead and crankpin bearings have a strength that, for a short time, will accept the loads at full speed without compression in the cylinder.
However, to avoid unnecessary wear and pitting at the joint faces when running a unit continuously with the compression cut-out, it is recommended that the engine speed is reduced to 55% of MCR speed, which is normally sufficient for manoeuvring the vessel.

During manoeuvres, if found necessary, the engine speed can be raised to 80% of MCR speed for a short period, for example 15 minutes.

⚠ In order to ensure that the engine speed is kept within a safe upper limit under these circumstances, the over-speed level of the engine must be lowered to 83% of MCR speed.

Case C: Combustion cut out.
Exhaust valve closed.
Piston still working in cylinder.

Reasons: This measure may be used if, for instance, the exhaust valve or the actuator is defective.

Procedure:

1) Cut out the fuel pump by lifting and securing the roller guide.

2) Put the exhaust valve out of action so that the valve remains closed (lift the guide or stop the oil supply and remove the hydraulic pipe).
Spring air must be supplied.

⚠ Piston cooling oil and cylinder cooling water must not be cut off.

Case D: Piston, piston rod, and crosshead suspended in the engine.
Connecting rod out.

Reasons: For instance, serious defects in piston, piston rod, connecting rod, cylinder cover, cylinder liner and crosshead.

Procedure:

1) Cut out the fuel pump by lifting and securing the roller guide.

2) Put the exhaust valve out of action so that the valve remains closed.

3) Dismantle the starting air pipe, and blank off the main pipe and the control air pipe for the actual cylinder.

⚠ In this case the blanking-off of the starting air supply is particularly important, as otherwise the supply of starting air will blow down the suspended engine components.

4) Suspend the piston, piston rod and crosshead, and take the connecting rod out of the crankcase.

5) Blank off the oil inlet to the crosshead.

6) Set the cylinder lub. oil for the actual cylinder, to "zero" delivery.

Case E: Piston, piston rod, crosshead, connecting rod, and telescopic pipe out

Reasons: This method is only used if lack of spare parts makes it necessary to repair the defective parts during the voyage.

Procedure:

1) Cut out the fuel pump by lifting and securing the roller guide.

2) Put the exhaust valve out of action so that the valve remains closed.

3) Dismantle the starting air pipe, and blank off the main pipe and the control air pipe for the actual cylinder.

4) Dismantle piston with piston rod and stuffing box, crosshead, connecting rod and crankpin bearing.
Blank off the stuffing box opening with two plates (towards scavenge air box and crankcase). Minimum plate thickness 5 mm.

5) Blank off the oil inlet hole from the telescopic pipe.

6) Set the cylinder lub. oil for the actual cylinder, to "zero" delivery.

3. Starting after putting Cylinders out of Operation

⚠ After carrying out any of the procedures described under Cases B, C, D, and E, it is absolutely necessary before starting to check the oil flow through the bearings, and the tightness of blanked-off openings.

After 10 minutes' running, and again after one hour, the crankcase must be opened for checking:
- the bearings,
- the temporarily secured parts,
- the oil flow through bearings,
- the tightness of blanked-off openings.

Load Restrictions:

Case A and C, see Item 4.

△ Case B, D and E, always contact the engine builder for calculation of allowable output and possible barred speed range.

4. Running with one Cylinder Misfiring

Misfiring is defined as no injection and compression present condition.

If only one cylinder is misfiring, it may be possible to run the engine with the remaining and the working cylinders, under two restriction:

a) The thermal load restriction:
The following speed and shaft powers may be obtained with fixed pitch propeller given by the thermal load of cylinders.

Total no. of cylinders	%Speed (of MCR)	%Load (of MCR)
4	83	57
5	86	63
6	88	67
7	89	71
8	90	73
9	91	75
10	91	77
11	92	78
12	92	78
14	93	80

b) Torsional vibration restrictions:

△ These restrictions, given as barred speed range, may be found from the class-approved report on the torsional vibration of the actual propeller shaft system, refer “INSTRUCTION MANUAL FOR ADJUSTMENT & MEASUREMENT” of this instruction book.

Only valid for misfiring, i.e. Item 2, Cases A and C, see *Plate 70401*.

With a CP-propeller, the same values apply when running according to the design pitch.
During the misfire operation keep the CP-propeller pitch fixed at the design pitch.

△ If more than one cylinder is misfiring, the engine builder must be contacted.

Running limitations in Cases B, D and E

△ In Cases B, D and E, the engine builder must always be contacted for calculation of allowable output and possible barred speed range.

5. How to put Turbochargers out of Operation

See also the instruction book “COMPONENT DESCRIPTION (ACCESSORIES)”.

If heavy vibrations, bearing failure, or other troubles occur in a turbocharger, preliminary measures can be taken in one of the following ways.

Case A: If the ship must be instantly manoeuvrable:

Reduce the load until the vibrations cease.

Case B: If the ship must be instantly manoeuvrable, but the damaged turbocharger cannot run even at reduced load:

⚠ This mode of operation is only recommendable if no time is available for removing the turbocharger rotor.

Engine with one turbocharger

1) Stop the engine.

2) Lock the rotor of the defective turbocharger.

3) Remove the compensator between the compressor outlet and the scavenge air duct.
This reduces the suction resistance.

4) Load restriction: See *Plate 70403*.

Engine with two or more turbochargers

1) Stop the engine.

2) Lock the rotor of the defective turbocharger.

3) Insert an orifice plate in the compressor outlet.
A small air flow is required through the compressor to cool the impeller.

4) Load restriction: See *Plate 70403*.

Case C: Running for an extended period with a turbocharger out of operation:

Engine with one turbocharger

1) Stop the engine.

2) Remove the rotor and nozzle ring of the turbocharger.

3) Insert blanking plates.

4) Remove the compensator between the compressor outlet and the scavenge air duct.
This reduces the suction resistance.

5) Load restriction: See *Plate 70403*.

Engine with two or more turbochargers

1) Stop the engine.

2) Lock the rotor of the defective turbocharger.

3) Insert an orifice plate in the compressor outlet.
A small air flow is required through the compressor to cool the impeller.
Insert blanking plates in both the turbine inlet and outlet.

4) Load restriction: See *Plate 70403*.

Case D: Repair to be carried out during voyage:

Engine with two or more turbochargers

1) Stop the engine.

2) Insert blanking plates in compressor outlet, turbine inlet and turbine outlet.

3) Load restriction: See *Plate 70403*.

6. Putting an Auxiliary Blower out of Operation

If one of the auxiliary blowers becomes inoperative, it is automatically cut out by built-in non-return valve.

See *Plate 70403*, for load restriction.

7. Low Load Operation

In case of long term (over 24 hours) running at low load, refer to special instruction in appendix ME3423.

Plate 70401 Cutting Cylinders out of Action

	Case A	Case B	Case C	Case D	Case E
Nature of emergency action	Combustion to be stopped	Compression and combustion to be stopped	Combustion to be stopped (due to faulty exhaust valve)	All reciprocating parts suspended or out	All reciprocating parts out
Some reasons for emergency action	Blow-by at piston rings or exhaust valve. Reduction of load on bearings. Faulty injection equipment.	Leaking cylinder cover or liner.	Exhaust valve, or exhaust valve actuating gear, malfunction.	Quickest and safest measure in the event of faults in large moving parts, or cylinder cover or cylinder liner	Only of interest if spare are not available.
Fuel pump with roller guide	Lifted	Lifted	Lifted	Lifted	Lifted
Exhaust valve	Working	Held open	Closed	Closed	Closed
Air for air spring	Open	Closed	Open	Open	Open
Exhaust valve actuator with roller	Working	Out or lifted	Out or lifted	Out or lifted	Out or lifted
Oil inlet for actuator	open	pipe dismantled and blanked	pipe dismantled and blanked	pipe dismantled and blanked	pipe dismantled and blanked
Starting valve	Working	Blanked	Working	Blanked	Blanked
Piston with rod	Moving	Moving	Moving	suspended	out
Crosshead	Moving	Moving	Moving	suspended	out
Connecting rod	Moving	Moving	Moving	out	out
Crankpin bearing	Moving	Moving	Moving	out	out
Oil inlet to crosshead	Open	Open	Open	Blanked	Blanked
Cooling oil outlet from crosshead	Open	Open	Open		
Cylinder lubricator	working	working	working min. delivery	zero	zero
Jacket cooling water	Open	Close	Open	Close	Close

Plate 70402A Scavenge Air Drain Pipes

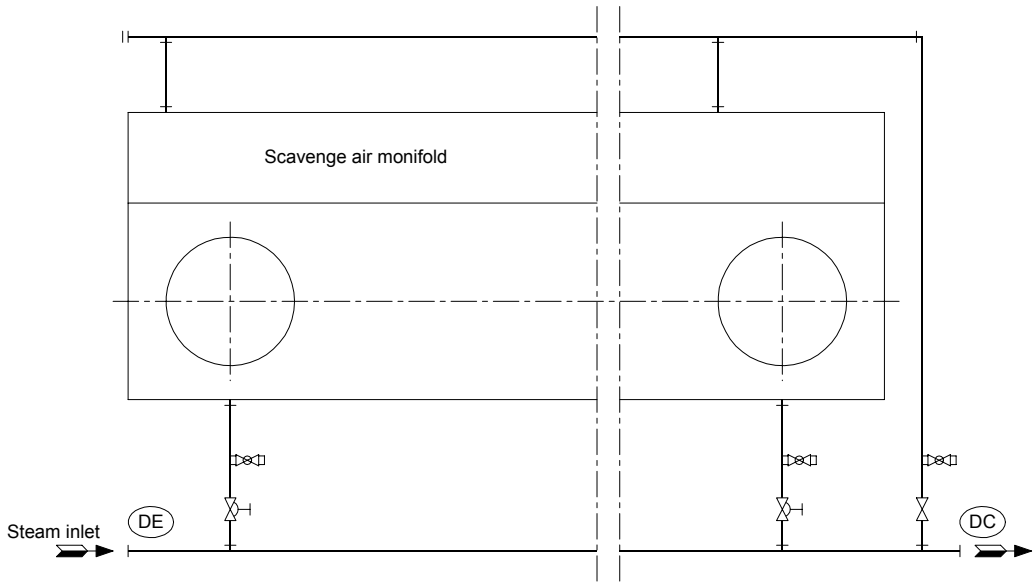

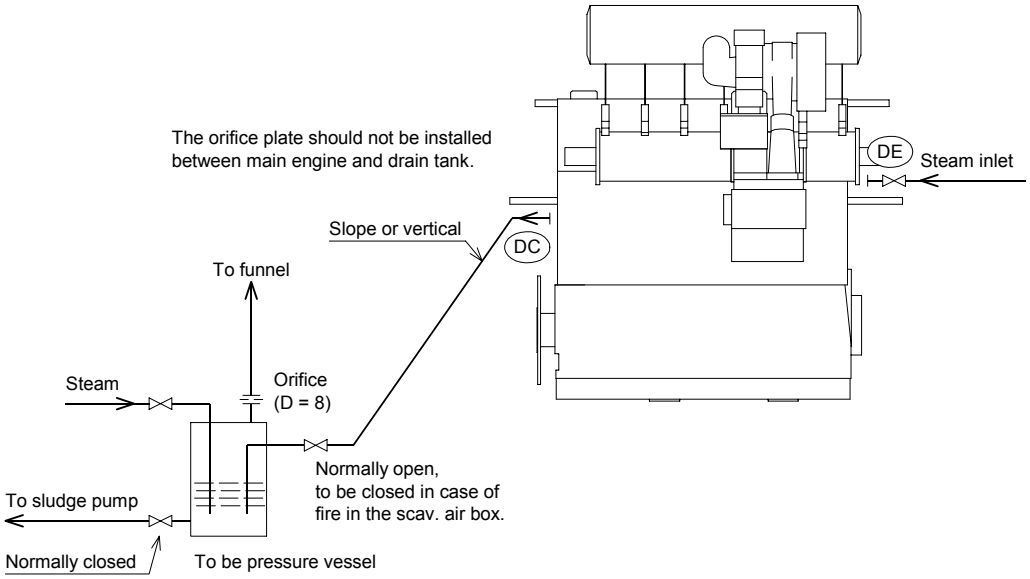

Plate 70402B Scavenge Air Drain Pipes

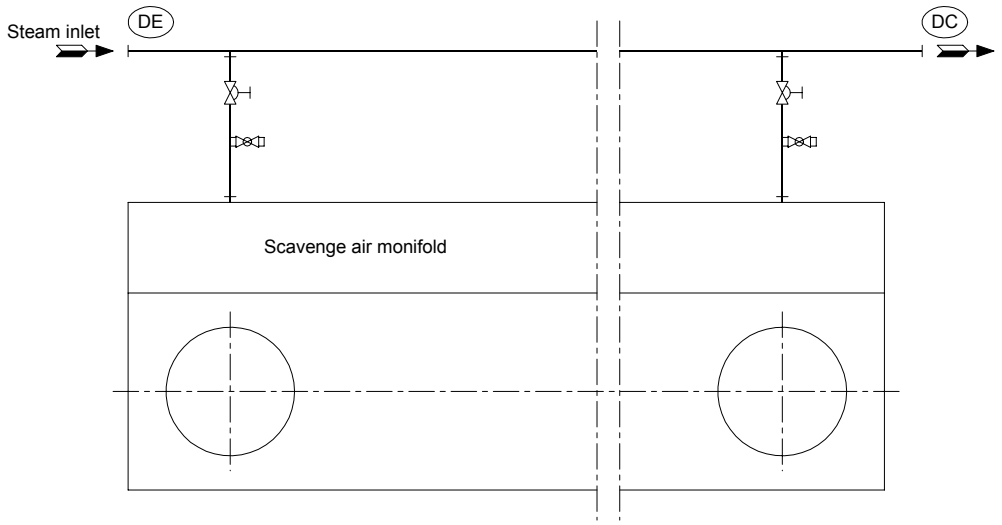

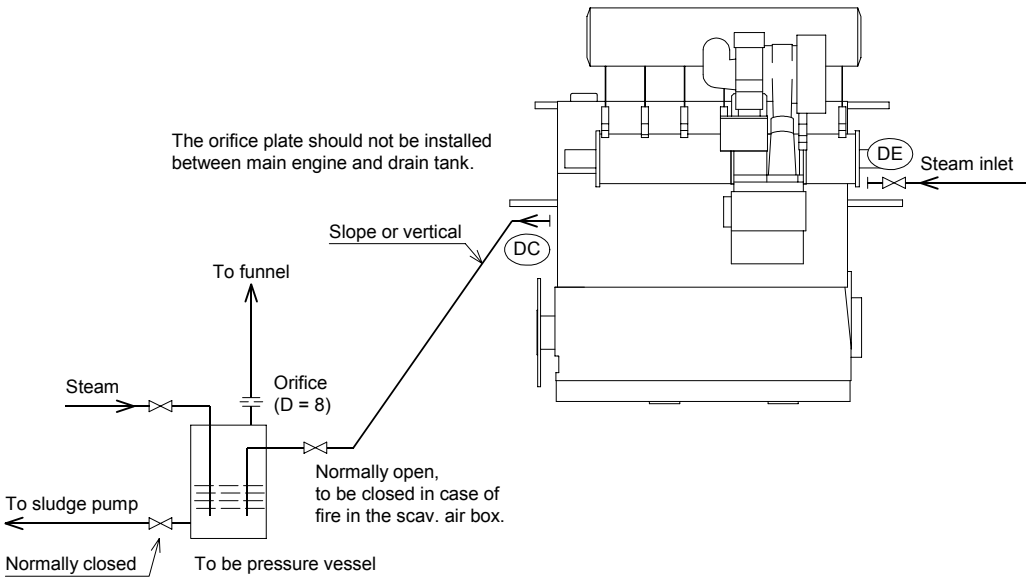

S26MC

Plate 70403 Cutting Turbocharger out of Action

Max % of M.C.R. load / (speed % M.C.R.)

Cut out /	Case B		Case C 1)		Case D
	Engine with one T/C	Engine with two or more T/C	Engine with one T/C	Engine with two or more T/C	Engine with two or more T/C
1 T/C / 1	15/(53) 2)	–	15/(53) 2)	–	–
1 T/C / 2	–	15/(53) 2)4)	–	50/(79) 2)5)	50/(79) 2)5)
1 T/C / 3	–	20/(58) 2)4)	–	66/(87) 2)5)	66/(87) 2)5)
1 T/C / 4	–	20/(58) 2)4)	–	75/(91) 2)5)	75/(91) 2)5)
1 Aux.bl. / 2 6)	10/(46) 3)	15/(53) 3)	10/(46) 3)	50/(79) 2)5)	50/(79) 2)5)
1 Aux.bl. / 3 6)	–	15/(53) 3)	–	66/(87) 2)5)	66/(87) 2)5)
1 Aux.bl. / 4 6)	–	15/(53) 3)	–	75/(91) 2)5)	75/(91) 2)5)

△ 1) The engine builder will, in each specific case, be able to give further information about engine load possibilities and temperature levels.

⚠ 2) The exhaust temperature must not, however, exceed the values(s) stated in Chapter 703. See also “Emergency Running with Cylinders or Turbochargers out of Operation”, Item 1.

⚠ 3) The exhaust gas temperature outlet / cyl. must not exceed 430 °C.

4) This is due to the loss of exhaust gas through the damaged turbocharger.

5) The mentioned exhaust temperature limit at emergency running is an average for the whole load range.

6) Simultaneous with turbocharger out of operation.

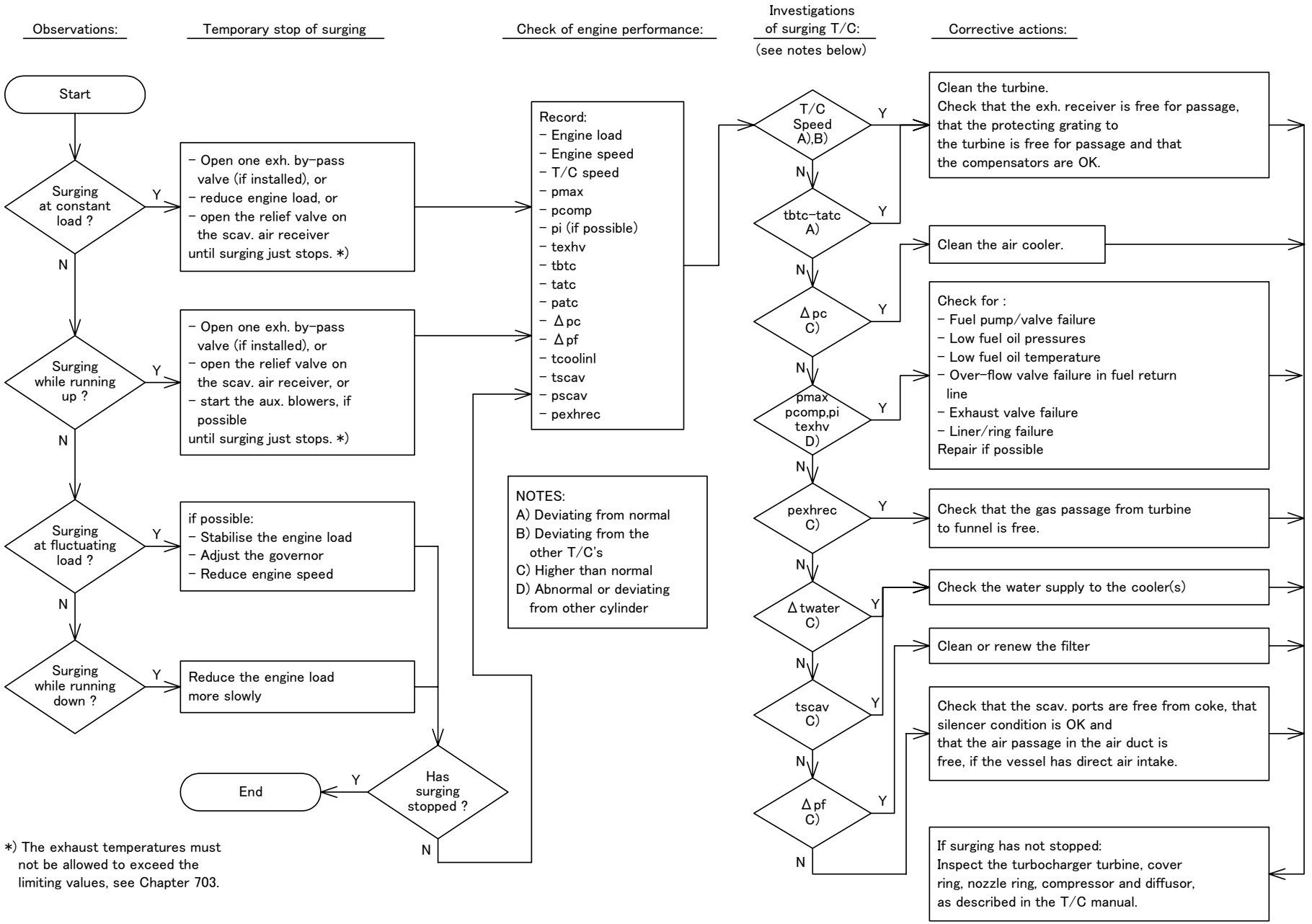

*) The exhaust temperatures must not be allowed to exceed the limiting values, see Chapter 703.

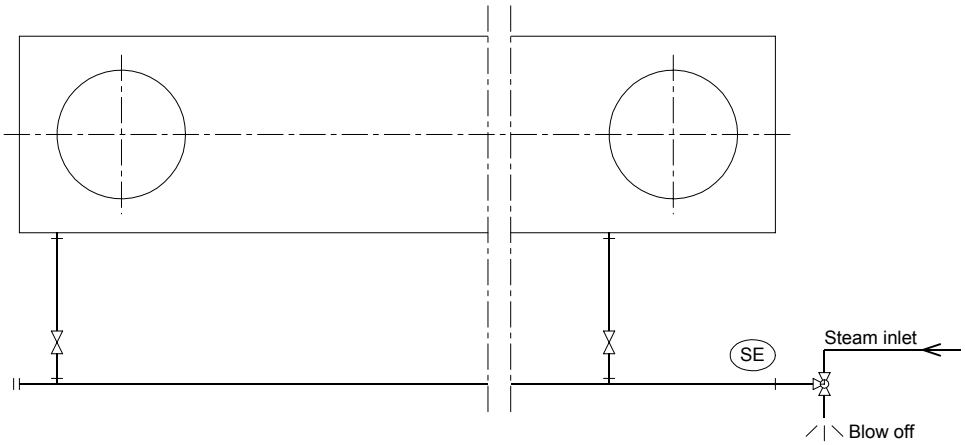

Seam extinguishing

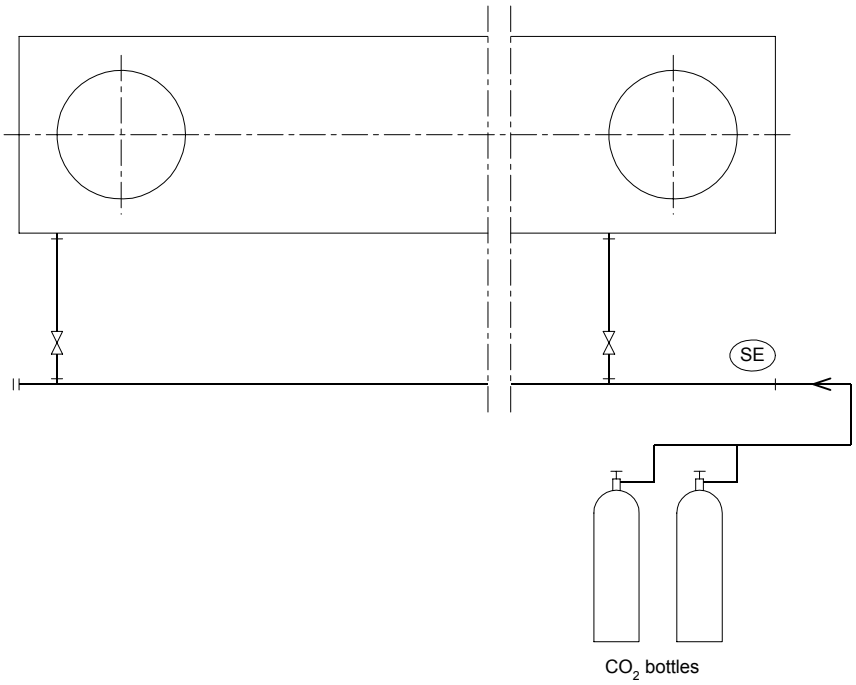

CO2 extinguishing (Option)

DRAWN	H.Uezono	MITSUI-MAN B&W MC ENGINES LOW LOAD OPERATION K/L/S-MC, K/L/S-MC-C (Mark5/6)	No.	20	114
CHECKED			ME 3423C		
APPROVED					

The procedure of low load operation for MITSUI-MAN B&W MC/MC-C (Mark5/6) engines is mentioned as below.

1. Low load operation procedure and load range

1) Fuel valve

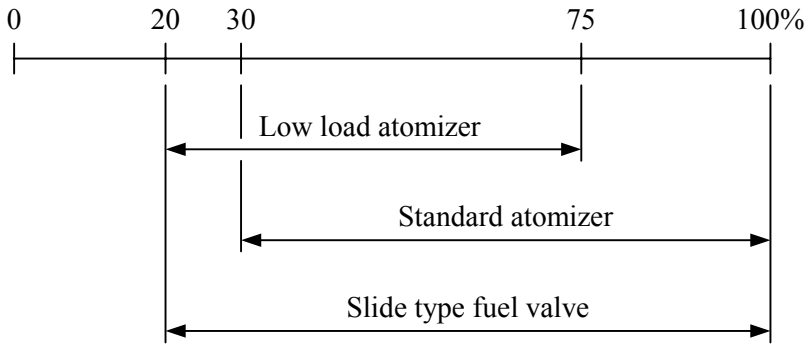

a. In case of long term running within load ranges of 20 to 75%, the fuel valves with atomizer for low load operation (Option) are recommended.
In case of the engines with Slide type fuel valve, of which scope of supply depends on the engine type, the lower limitation for operating the engine is expanded to same level of the conventional fuel valve with low load atomizer, which enables without for exchanging the fuel valve.

If your ship is complied with IMO NOx emission regulation, the “Technical File” must be modified and be approved by the administration of the flag state or its agency before any change of the engine components, which influences the NOx emission properties, such as fuel valve atomizer.
Therefore, if long term low load operation in service is expected previously, it is recommended that the fuel valve specification is taken into consideration before shop trial.

b. Any long term running for more than 24 hours below 20% load should only be carried out under engine builder's advice.

c. Any long term running with atomizers for low load operation should be avoided over 75% load.

d. Any long term running with standard atomizers should be avoided below the lower limit of the operation range.

e. The load ranges mentioned above can be applied to derated engines.
(100% load corresponds to the nominal M.C.O. or the derated M.C.O.)

2) Auxiliary blower and turbocharger adjustment

a. Auxiliary blowers should always be running below 0.05 MPa of scavenging air pressure.
Any long term operation in the range of repeated opening and closing the flap valves, where big noise is occurs in the scavenging air receiver, should be avoided.
If necessary, it is recommended that the setting point of the scavenging air pressure stop switch of auxiliary blower should be lowered according to the engine builder’s advice.

b. In case of engines with two or more turbochargers, turbocharger cut out running may reduce the specific fuel oil consumption.
The number of turbochargers that can be cut out during low load operation depends on engine type and thereby engine builder's advice is necessary.
In case of engines with two turbochargers, the maximum load with one turbocharger cut out running is up to 50% load.

2. Precautions of low load operation

1) Jacket cooling water outlet temperature should be kept to be 80 °C.

2) Running within barred engine speed ranges should be avoided.

3) In case of engines with Mechanical type lubricator, as the cylinder oil feed rate at part load is automatically decreased in proportion to the engine speed.
However, during low load operation, the cylinder oil dosage may tend to be in excess against the reduction of engine load.

a. During long term low load operation, the cylinder oil feed rate can be adjusted manually in proportion to ratio between mean effective pressure at part load and at M.C.O., if the cylinder oil dosage is proved excessive.
At any time the cylinder oil feed rate should not be below 40% of rate for M.C.O.
Remember to adjust the feed rate to the nominal level, after low load operation is finished.

In case of engines with optional item described below b), those feed rate regulation in proportion to MEP is carried out automatically.

b. If long term low load operation in service is expected previously, the following optional items can be effective against above situations.
- MEP dependent cylinder lubrication system (for Mechanical type lubricator)
- The electronically controlled Alpha lubricator system

4) Since the carbon deposits in the exhaust gas passage areas may increase during long term low load operation, it is recommended that the cleaning of those areas periodically, especially the grids before the turbocharger, turbocharger turbine side and exhaust gas boiler (if fitted).
If long term low load operation in service is expected previously, the following optional items can be effective against those situations.
- Cylinder cut-out device (Option)
- By-pass for exhaust gas boiler to prevent the soot fire.
(* The by-pass for exhaust gas boiler is normally in the supply scope of shipbuilders.)

701 SAFETY PRECAUTIONS AND ENGINE DATA

702 CHECKS DURING STANDSTILL PERIODS

703 STARTING, MANOEUVRING AND RUNNING

704 SPECIAL RUNNING CONDITINS

705 FUEL AND FUEL TREATMENT

706 PERFORMANCE EVALUATION & GENERAL OPERATION

707 CYLINDER CONDITION

708 BEARING AND CIRCULATING OIL

709 WATER COOLING SYSTEM

710 DATA

Chapter 705
Fuel and Fuel Treatment

Contents Page

Fuel Oil

1. Diesel Oil 705-02
2. Heavy Oil 705-02
3. Guiding Fuel Oil Specification 705-03

Pressurised Fuel Oil System

1. System Layout 705-05
2. Fuel Oil Pressure 705-06

Fuel Treatment

1. Cleaning 705-07
   - 1.1 General 705-07
   - 1.2 Centrifuging 705-07
   - 1.3 High Density Fuels 705-09
   - 1.4 Supplementary Equipment 705-09
2. Fuel Oil Stability 705-10
3. Preheating before Injection 705-10
   - 3.1 Precaution 705-11
   - 3.2 Fuel Preheating when in Port 705-11
   - 3.3 Starting after Staying in Port 705-11
4. Other Operational Aspects 705-12
   - 4.1 Circulating Pump Pressure 705-12
   - 4.2 Fuel Change-Over 705-12

Plates

Residual Marine Fuel Standards 70501
Fuel Oil System 70502
Fuel Oil Pipes on Engine 70503A
Fuel Oil Pipes on Engine 70503B
Fuel Oil Centrifuges, Mode of Operation 70504
Centrifuge Flow Rate and Separation Temperature (Preheating) 70505
Preheating of Heavy Fuel Oil (Prior to Injection) 70506

Fuel Oil

1. Marine Diesel Oil

ISO 8217 Classification and specification of marine fuel, edition 2005, Class DMB, or similar oils may be used.

2. Heavy Fuel Oil

For guidance on purchase, reference is made to ISO 8217 Classification and specification of marine fuel, edition 2005.
For reference purposes, an extract from relevant standards and specifications is shown in *Plate 70501*.

From these, the maximum acceptable grades are RMH700 and RMK700, however, due to ship's equipment, acceptable grades may be limited.
It is recommended to confirm ship's specification.

The data in the above heavy fuel oils standards and specifications refer to fuel as delivered to the ship, i.e. before on-board cleaning.

In order to ensure effective and sufficient cleaning of the heavy fuel oil - i.e. removal of water and solid contaminants - the fuel oil specific gravity at 15 °C should be below 0.991.
Higher densities can be allowed if special treatment systems are installed.

△ Current analysis information is not sufficient for estimating the combustion properties of the oil.
This means that service results depend on oil properties which cannot be known beforehand.
This especially applies to the tendency of the oil to form deposits in combustion chambers, gas passages and turbines.
It may therefore be necessary to rule out some oils that cause difficulties.

If the ship has been out of service for a long time without circulation of fuel oil in the tanks (service and settling), the fuel must be circulated before start of the engine.
Before starting the pump(s) for circulation, the tanks are to be drained for possible water settled during the stop.
The risk of concentration of dirt and water in the fuel caused by long time settling is consequently considerably reduced.

For treatment of fuel oil, see further on in this Chapter.

3. Guiding Fuel Oil Specification

Based on our general service experience, it has been, as a supplement to the above mentioned standards, drawn up the guiding heavy fuel oil specification shown in the Table below.

Heavy fuel oils limited by this specification have, to the extent of the commercial availability, been used with satisfactory results on MITSUI-MAN B&W two-stroke low speed diesel engines.

In the table the analysed data refers to fuel oils as delivered to the ship, i.e. before any on-board cleaning.

Guidance specification (maximum values)		
Density at 15 °C	kg/m^3	991 *1)
Kinematic viscosity at 100 °C at 50 °C	 mm^2/s mm^2/s	 55 700
Water	% (V/V)	0.5
Carbon residue	% (m/m)	22
Sulphur *2)	% (m/m)	4.5
Ash	% (m/m)	0.15
Vanadium	mg/kg	600
Flash point	°C	min. 60
Pour point, summer	°C	30
Pour point, winter	°C	30
Aluminium + Silicon	mg/kg	80
Total sediment, potential	% (m/m)	0.10
Zinc *3)	mg/kg	15
Phosphorus *3)	mg/kg	15
Calcium *3)	mg/kg	15
Equal to ISO 8217 RMH700		
m/m = mass V/V = volume		

*1 May be increased to 1010 kg/m^3, provided automatic modern clarifiers are installed.

*2 A Sulphur limit of 1.5% (m/m) will apply in SOx Emission Control Areas designated by the International Maritime Organization, when its relevant comes into force. There may be local variations.

*3 The Fuel shall be free of ULO (Used Lubricating Oil).
A fuel is considered to be free of ULO if one or more of the elements are below the limits. All three elements shall exceed the limits before deemed to contain ULO.

If heavy fuel oils with analysis data exceeding the above figures are to be used, especially with regard to viscosity and specific gravity, the engine builder should be contacted for advice regarding possible fuel oil system changes.

On account of the relatively low commercial availability of the above-mentioned residuals, most of service experience have been accumulated on fuels with data under (below) the following level:

Viscosity	450 mm^2/s / 50 °C
Conradson Carbon Residue	18%
Sulphur	4%
Vanadium	400 mg/kg

Therefore, in the case of fuels with analysis data exceeding these figures, a close notice should be kept on engine performance and cylinder condition.

Pressurised Fuel Oil System

1. System Layout (*Plate 70502*, *70503A* and *70503B*)

The system is normally arranged such that both diesel oil and heavy fuel oil can be used as fuel.

From the bunker tanks, the oil is pumped to an intermediate tank, from which the centrifuges can deliver it to the respective service tanks ("day-tank").

To obtain the most efficient cleaning, the centrifuges are equipped with preheaters, so that the oil can be preheated to about 95 ~ 98 °C (regarding the cleaning, see "Fuel Treatment").

From the particular service tank in operation, the oil is led to one of the two electrically driven booster pumps, which deliver the oil, under a pressure of about 0.4 MPa, through a flow meter, to the low pressure side of the fuel oil system.

The oil is thereafter drawn to one of two electrically driven circulating pumps, which passes it through the preheater, the viscosity regulator, the filter, and on to the fuel injection pumps.

The filter mesh shall correspond to an absolute fineness of 50 µm.

The return oil from the fuel valves and pumps is led back, via the venting tank, to the suction side of the circulating pump.

In order to make the required pressure in the main line at the inlet to the fuel pumps, the capacity of the booster and circulating pump should be followed our recommendation.

In addition, a spring-loaded over-flow valve is fitted in order to maintain a constant pressure installed at fuel main pipe on the engine

The fuel oil drain pipes are equipped with heat tracing, through which hot jacket cooling water flows, or by steam.
The drain pipe heat tracing must be in operation during running on heavy fuel.

To ensure an adequate flow of heated oil through the fuel pumps and fuel valves at all loads (including stopped engine), the fuel valves are equipped with a slide and circulating bore, see the instruction book "COMPONENTS DESCRIPITION (CODE BOOK)".
By means of the "built-in" circulation of preheated fuel oil, the fuel pumps and fuel valves can be maintained at service temperature, also while the engine is stopped.
Consequently, it is not necessary to change to diesel oil when entering harbour, provided that the circulating pump is kept running and preheating of the circulated fuel oil is maintained.
However, change-over to diesel oil can become necessary, see Item 4.2.

2. Fuel Oil Pressure

Carry out adjustment of the fuel oil pressure, during engine standstill, in the following way:

1) Adjust the valves in the system as for normal running, thus permitting fuel oil circulation.

2) Start the booster and circulating pumps, and check that the fuel oil is circulating.

3) Booster Pumps:
Adjust the spring-loaded safety valve at booster pump No. 1 to open at 0.5 MPa.
Carry out the same adjustment with booster pump No. 2.

4) Regulate the fuel oil pressure, by means of the pressure control valve (or by-pass valve) installed in the booster pump's discharge line.
Adjust so that the pressure in the low pressure part of the fuel system is 0.4 MPa.

5) Circulating Pumps:
With the booster pumps running at 0.4 MPa outlet pressure, adjust the spring-loaded safety valve at circulating pump No. 1 to open at 1.1 MPa.
Carry out the same adjustment with circulating pump No. 2.

6) Fuel Line:
Regulate the fuel oil pressure by means of the spring-loaded over-flow valve installed at fuel main pipe on the engine.
Adjust the over-flow valve so that the pressure in the main inlet pipe is 0.7 ~ 0.8 MPa.

7) With the engine running, the pressure will fall a little.
Re-adjusted to the desired value at MCR.

Fuel Treatment

1. Cleaning

1.1 General

Fuel oils should always be considered as contaminated upon delivery and should therefore be thoroughly cleaned to remove solid as well as liquid contaminants before use.
The solid contaminants in the fuel are mainly rust, sand, dust and refinery catalysts; liquid contaminant are mainly water, i.e., either fresh or salt water.

These impurities in the fuel can:
– cause damage to fuel pumps and fuel valves.
– result in increased cylinder liner wear.
– deterioration of the exhaust valve seats.
– give increased fouling of gasways and turbocharger blades.

1.2 Centrifuging

Effective cleaning can only be ensured by means of centrifuges.

The ability to separate water depends largely on the specific gravity of the fuel oil relative to the water - at the separation temperature.
In addition, the fuel oil viscosity (at separation temperature) and flow rate, are also influencing factors.

The ability to separate abrasive particles depends upon the size and specific weight of the smallest impurities that are to be removed; and in particular on the fuel oil viscosity (at separation temperature) and flow rate through the centrifuge.

It is recommended that the capacity of the installed centrifuges should accord to the centrifuge maker's instructions.

To obtain optimum cleaning, it is of the utmost importance that:

a) The centrifuge is operated with as low a fuel oil viscosity as possible.

A sufficiently low viscosity is obtained by operating the centrifuge preheater at the maximum allowable temperature for the fuel concerned.
For fuels above 180 mm^2/s at 50 °C, It is especially important that the highest possible preheating temperature, 98 °C, should be maintained in the centrifuge preheater.
See *Plate 70505*.

b) The fuel oil is allowed to remain in the centrifuge bowl for as long as possible.

The fuel is kept in the centrifuge as long as possible by adjusting the flow rate through the centrifuge so that it corresponds to the amount of fuel required by the engine without excessive re-circulating.
Consequently, the centrifuge should operate for 24 hours a day except during necessary cleaning.

On centrifuges equipped with gravity discs and/or adjusting screws, their correct choice and adjustment is of special importance for the efficient removal of water.
The centrifuge manual states the disc or screw adjustment should be chosen on the basis of the density of the fuel.

Centrifuge Capacity :

The normal practice is to have at least two centrifuges available for fuel cleaning purposes.

Series operation: *Plate 70504* Fig. 1

Results from experimental work on the centrifuge treatment of today's residual fuel qualities have shown that the best cleaning effect, particularly in regard to removal of catalyst fines, is achieved when the centrifuges are operated in series, i.e., in purifier - clarifier mode.

Series operation of centrifuges (ensuring a maximum of safety), is therefore a fully acceptable alternative to the previously recommended parallel operation.
Each centrifuge must however be able to handle the total amount of fuel required by the engine, without exceeding the flow-rate recommended by the centrifuge maker.

This recommendation is valid for conventional centrifuges.
For modern type, suitable for treating fuels with densities higher than 991 kg/m^3 at 15 °C, it is recommended to follow the maker's specific instructions, see Item 1.3 below.

Parallel Operation: *Plate 70504* Fig. 2

If the installed centrifuge capacity is on the low side, in relation to the specific viscosity of the fuel oil in question, and if more than one centrifuge is available, parallel operation may be considered as a means of obtaining an even lower flow rate.
However, in view of the above recommendations, serious considerations should be given to the possible advantages of installing new equipment in compliance with today's fuel qualities and flow recommendations.

For determination of the centrifuging capacity, it is generally advised that the recommendations of the centrifuge maker to be followed, but the curves shown on *Plate 70505* can be used as a guide.

1.3 High Density Fuels

In view of the fact that some fuel oil standards incorporate fuel grades without a density limit, and also the fact that the traditional limit of 991 kg/m^3 at 15 °C is occasionally exceeded on actual deliveries, some improvements in the centrifuging treatment have been introduced to enable treatment of fuels with higher density.

Since the density limit used so far is, as informed by centrifuge makers, given mainly to ensure interface control of the purifier, new improved clarifies, with automatic de-sludging, have been introduced, which means that the purifier can be dispensed with.
With such equipment, adequate separation of water and fuel can be carried out in the centrifuge, for fuels up to a density of 1010 kg/m^3 at 15 °C.
Therefore, this has been selected as the density limit for new high density fuel grades.

Thus we have no objections to the use of such high density fuels for our engines provided that these types of centrifuges are installed.
They should be operated in parallel or in series according to the centrifuge maker's instructions.

1.4 Supplementary Equipment

In a traditional system, the presence of large amounts of water and sludge will hamper the functioning of a clarifier, for which reason a purifier has been used as the first step in the cleaning process.
With the new automatic de-sludging clarifiers, the purifier can, as mentioned, be dispensed with; it is considered that the removal of solids to be the main purpose of fuel treatment.

Although not necessarily harmful in its own right, the presence of an uncontrolled amount of water and sludge in the fuel makes it difficult to remove the solid particles by centrifuging.
Therefore, additional equipment has been developed;

a) Homogenisers

Homogenisers are used to disperse any sludge and water remaining in the fuel after centrifuging.
A homogeniser placed after the centrifuge will render fresh water (not removed by centrifuging) harmless to the engine, and eventually lead to the acceptance of fuels with no density limit.

Homogenising may also be a means to cope with the more and more frequently occurring incompatibility problems, which are not really safeguarded against in any fuel specification.

b) Fine filters

Fine filters are placed directly after the centrifuge, or in the supply line to the engine, in order to remove any solid particles not taken by centrifuging. The mesh is very fine, i.e. down to 5 µm.

Homogenising before a fine filter may reduce the risk of fine filter blocking by agglomeration of asphaltenes.

c) Super decanters

This is, in principle, a “horizontal clarifier”; the aim is to remove sludge before normal centrifuging, and thus prevent blocking of the centrifuge.

2. Fuel Oil Stability

△ Fuel oils are produced on the basis of widely varying crude oils and refinery processes.
Due to incompatibility, such fuels occasionally tend to be unstable when mixed, for which reason mixing should be avoided to the widest possible extent. See also "Fuel change-over", point 4.2.

A mixture of incompatible fuels in the tanks may result in rather amount of sludge being taken out by the centrifuges or even lead to centrifuge blocking.

Stratification can also take place in the service tank, leading to a fluctuating preheating temperature, when this is controlled by a viscorator.

Inhomogeneity in the service tank can be counteracted by recirculating the contents of the tank through the centrifuge.
This will have to be carried out at the expense of the benefits derived from a low centrifuge flow rate as mentioned above.

3. Preheating before Injection

In order to ensure correct atomisation, the fuel oil temperature must be adjusted according to the specific fuel oil viscosity in question.

Inadequate temperature will influence the combustion and may cause increased wear on cylinder liners and piston rings, as well as deterioration of the exhaust valve seats.
Too low a heating temperature, i.e., too high viscosity, may also result in too high injection pressures, leading to excessive mechanical stresses in the fuel oil system.

In most installations, preheating is carried out by means of steam.
The viscosity is regulated by controlling the steam supply on the specified temperature level by the thermostatic valve in the steam system, or the viscosity regulator (if equipped).

Depending upon the viscosity / temperature relationship (the viscosity index), an outlet temperature after preheater of up to 150 °C may be necessary, as indicated on the guidance curves shown in *Plate 70506*, which illustrated the expected preheating temperature as a function of the fuel oil viscosity.

The recommended viscosity meter setting is 10 ~ 15 mm^2/s.
However, service experience has shown that the viscosity of the fuel before the fuel pump is not too critical a parameter, for which reason it is allowed a viscosity of up to 20 mm^2/s after the preheater.

⚠ In order to avoid too rapid fouling of the preheater, the temperature should not exceed 150 °C.

3.1 Precaution

⚠ Caution must be taken to avoid heating the fuel oil pipe by means of the heat tracing when changing from heavy fuel to diesel oil, and during running on diesel oil.

Under these circumstances excessive heating of the pipes may reduce the viscosity too much, which will involve the risk of the fuel pumps running hot, thereby increasing the risk of sticking of the fuel pump plunger and damage to the fuel oil sealings. See point 4.3.

3.2 Fuel Preheating when in Port

During engine standstill, the circulation of preheated fuel oil does not require the viscosity to be as low as is recommended for injection.
Thus, in order to save energy, the preheating temperature may be lowered some 20 °C , giving a viscosity of about 30 mm^2/s.

3.3 Staring after Staying in Port

If the engine has been stopped on heavy fuel, and if the heavy fuel has been circulated at a reduced temperature during standstill, the preheating and viscosity regulation should be made operative about one hour before starting the engine, so as to obtain required viscosity.

4. Other Operational Aspects

4.1 Circulating Pump Pressure

The fuel oil pressure measured on the engine at fuel oil inlet main pipe should be from 0.7 ~ 0.8 MPa.
This maintains a pressure margin against gasification and cavitation in the fuel system, even at 150 °C.

The booster pump may be stopped when the engine is not in operation.
See *Plate 70502*.

4.2 Fuel Change-over

See also "Pressurised fuel oil system" section.

The engine is equipped with uncooled, "all-symmetrical", light weight fuel valves - with built-in fuel circulation.
This automatic circulation of the preheated fuel (through the high-pressure pipes and the fuel valves) during engine standstill, is the background for our recommending constant operation on heavy fuel.

However, change-over to diesel oil can become necessary, for instance:

– the vessel is expected to have a prolonged inactive period with cold engine, e.g. due to:
  • a major repair of the fuel oil system etc.
  • a docking
  • more than 5 days' stop (incl. laying-up)
– environmental legislation requiring the use of low-sulphur fuels.

Changer-over can be performed at any time:

– during engine running, see Items 4.2.A and 4.2.B
– during engine standstill, see Item 4.2.C

⚠ In order to prevent:
– fuel pump and injector sticking/scuffing,
– poor combustion,
– fouling of the gasways,
it is very important to carefully follow the temperature / load requirements of the changer-over procedures. See Items 4.2.A, 4.2.B and 4.2.C.

△ It should not be reversed the engine, while heating-up the diesel oil for fuel oil change-over procedure.
However, in the event of reversing situation during such procedure, it is necessary to cancel "The fuel limiter by scavenging air pressure" manually, see the instruction book "MANOEUVRING SYSTEM".

A. Change-over from Diesel Oil to Heavy Fuel during Running

⚠ To protect the injection equipment against rapid temperature changes, which may cause sticking / scuffing of the fuel valves and of the fuel pump plungers and suction valves, the change-over is carried out as follows.

1) Ensure that the heavy oil in the service tank is at normal temperature level.

2) Reduce the engine load to 75% of MCR load.

3) By means of the thermostatic valve in the steam system, or by manual control of the viscosity regulator if equipped, the diesel oil is heated to maximum 60 ~ 80 °C.
Regulate the preheating so as to give a temperature rise of about 2 °C per minute.

The diesel oil viscosity should not drop below 2 mm^2/s, as this might cause fuel pump and fuel valve scuffing, with the risk of sticking, due to failing lubrication ability of the diesel oil.
For some light diesel oils (gas oil), this will limit the upper temperature to somewhat below 80 °C.

Due to the above-mentioned risk of sticking / scuffing of the fuel injection equipment, the temperature of the heavy fuel oil in the service tank must not be more than 25 °C higher than the heated diesel oil in the system (60 ~ 80 °C) at the time of change-over.

4) When the temperature requirements have been fulfilled, the change to heavy oil is performed by turning the change-over cock.
The temperature rise is then continued at a rate of about 2 °C per minute, until reaching the required viscosity.

B. Change-over from Heavy Fuel to Diesel Oil during Running

⚠ To protect the injection equipment against rapid temperature changes, which may cause sticking / scuffing of the fuel valves and of the fuel pump plungers and suction valves, the change-over is carried out as follows.

1) Preheat the diesel oil in the service tank to about 50 °C, if possible.

2) Cut off the steam supply to the fuel oil preheater and heat tracing.

3) Reduce the engine load to 75% of MCR load.

4) Change to diesel oil when the temperature of the heavy oil in the preheater has dropped to about 25 °C above the temperature in the diesel oil service tank, however, not below 75 °C.

If, after the change-over, the temperature (at the preheater) suddenly drops considerably, the transition must be moderated by supplying a little steam to the preheater, which now contains diesel oil.

C. Change-over from Heavy Fuel to Diesel Oil during Standstill

1) Stop the preheating.
Regarding temperature levels before change-over, see Item B.

2) Change position of the change-over valves at the fuel tanks, so that diesel oil is led to the booster pumps.

3) Start the booster pumps, if not already running.

4) Change position of the change-over valve at the venting tank, so that the fuel oil if pumped to the HFO-tank.

5) When the heavy fuel oil is replaced by diesel oil, turn the change-over valve at the venting tank back to its normal position, so that the heavy oil in the venting tank is now mixed with diesel oil.

6) Stop the booster pumps.

7) Stop the circulating pumps.

Plate 70501 Residual Marine Fuel Standards

Parameter	Unit	Limit	RMA 30	RMB 30	RMD 80	RME 180	RMF 180	RMG 380	RMH 380	RMK 380	RMH 700	RMK 700
Density at 15 °C	kg/m^3	max.	960.0	975.0	980.0	991.0		991.0		1010.0	991.0	1010.0
Viscosity at 50 °C	mm^2/s	max.	30.0		80.0	180.0		380.0			700	
Water	% (V/V)	max.	0.5		0.5	0.5		0.5			0.5	
Carbon residue	% (m/m)	max.	10		14	15	20	18	22		22	
Sulphur 2)	% (m/m)	max.	3.50		4.00	4.50		4.50			4.50	
Ash	% (m/m)	max.	0.10		0.10	0.10	0.15	0.15	0.15		0.15	
Vanadium	mg/kg	max.	150		350	200	500	300	600		600	
Flash point	°C	min.	60		60	60		60			60	
Pour point, summer	°C	max.	6	24	30	30		30			30	
Pour point, winter	°C	max.	0	24	30	30		30			30	
Aluminium + Silicon	mg/kg	max.	80		80	80		80			80	
Total sediment, Potential	% (m/m)	max.	0.10		0.10	0.10		0.10			0.10	
Zinc 3)	mg/kg	max.	15									
Phosphorus 3)	mg/kg	max.	15									
Calcium 3)	mg/kg	max.	30									

Source: ISO 8217 Third Edition 2005-11-01
Petroleum products - Fuels (class F) - Specification of marines fuels

1) Approximate equivalent viscosities (for information only).

Kinematic viscosity (mm^2/s)	at 100 °C	6	10	15	25	35	45	55
Kinematic viscosity (mm^2/s)	at 50 °C	22	40	80	180	380	500	700

2) A Sulphur limit of 1.5% (m/m) will apply in SOx Emission Control Areas designated by the International Maritime Organization, when its relevant comes into force. There may be local variations.

3) The Fuel shall be free of ULO (Used Lubricating Oil).
A fuel is considered to be free of ULO if one or more of the elements are below the limits. All three elements shall exceed the limits before deemed to contain ULO.

Plate 70502 Fuel Oil System

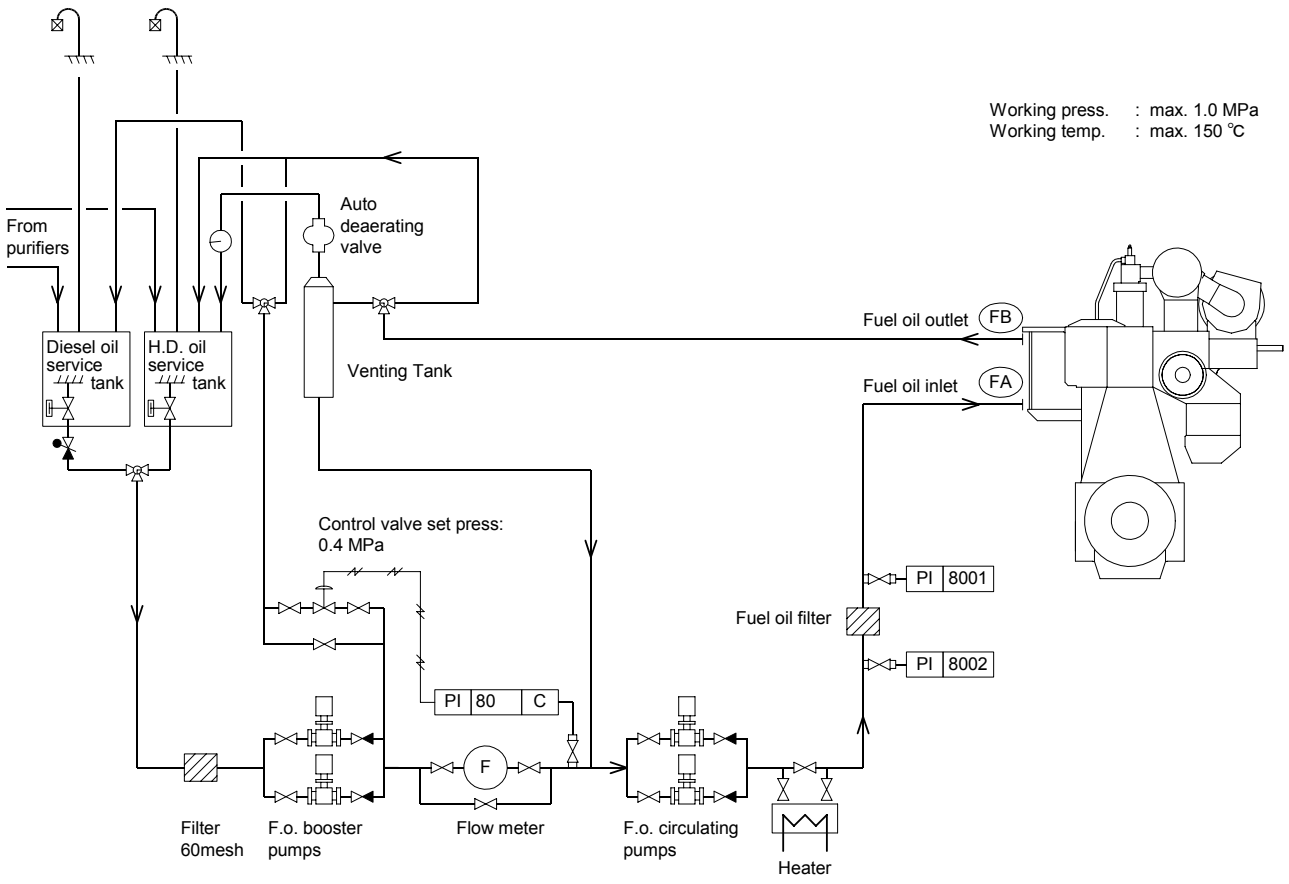

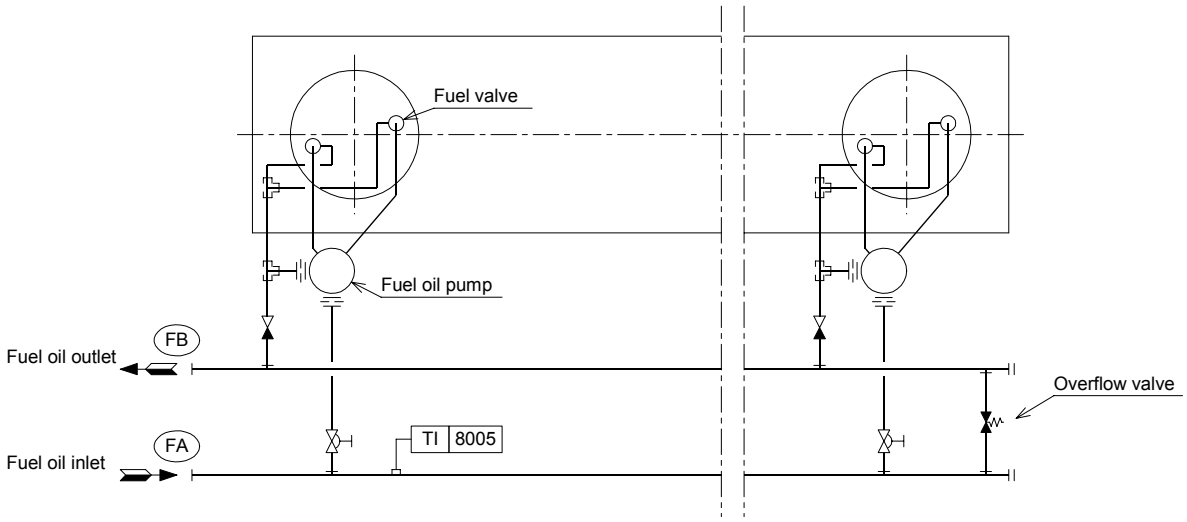

S90MC-C
S80MC-C, S80MC, L80MC
S70MC-C, S70MC, L70MC-C, L70MC
S60MC, L60MC
S50MC, L50MC

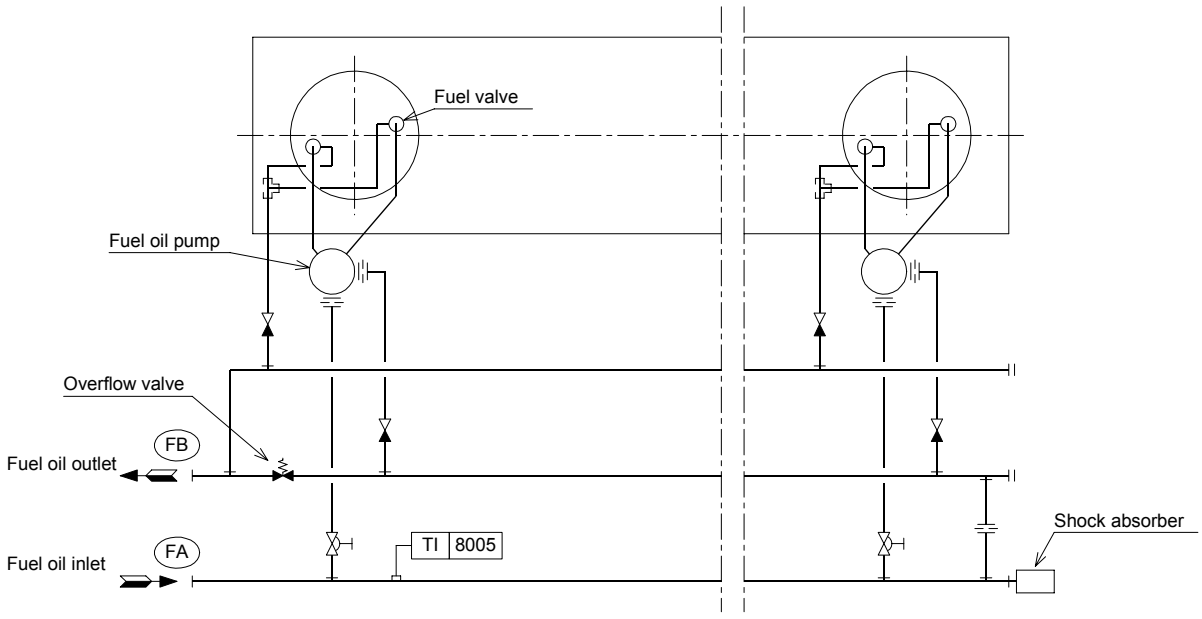

S60MC-C, L60MC-C
S50MC-C
S46MC-C
S42MC, L42MC
S35MC, L35MC
S26MC

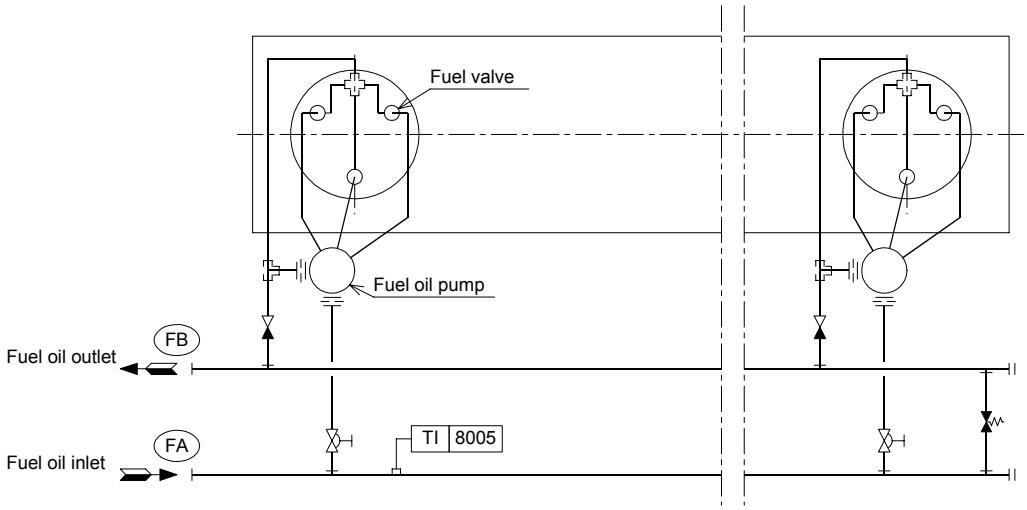

K98MC, K98MC-C
K90MC, K90MC-C
K80MC-C

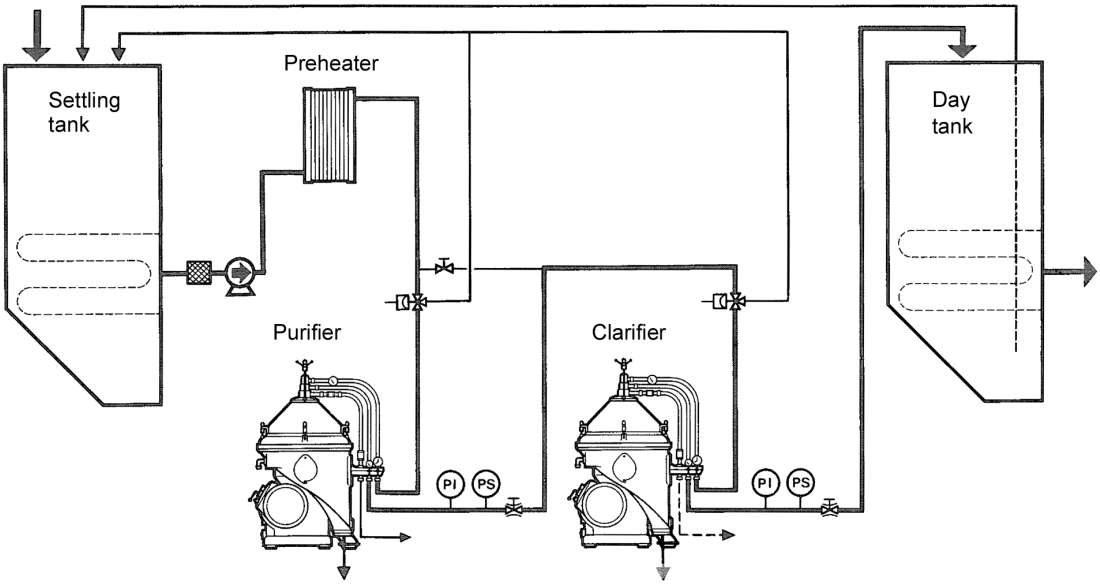

Fig.1

In Series

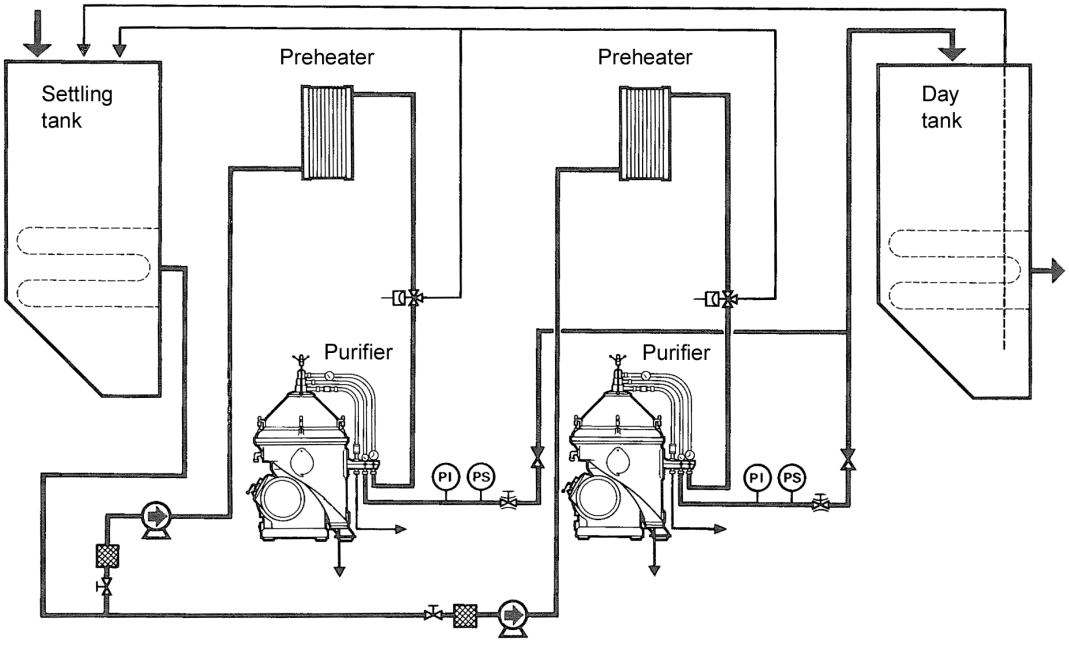

Fig.2

In Parallel

Plate 70505 **Centrifuge Flow Rate and Separation Temperature**
(Preheating)

Rate of flow

Relate to rated capacity of centrifuge

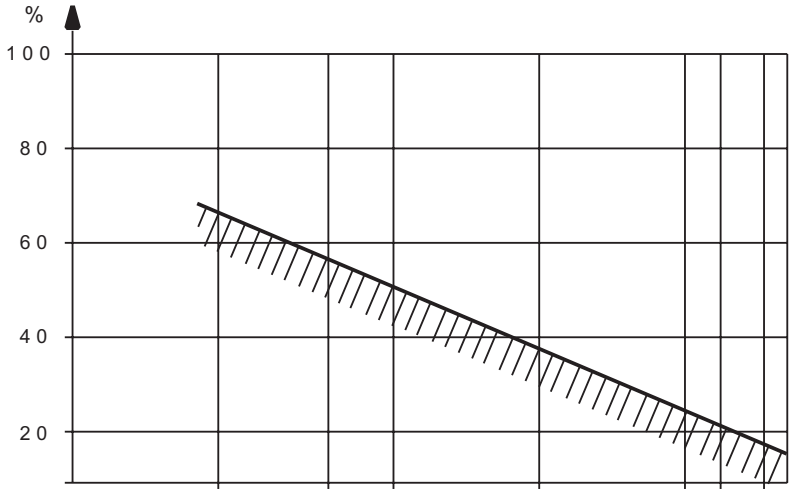

Separation temperature

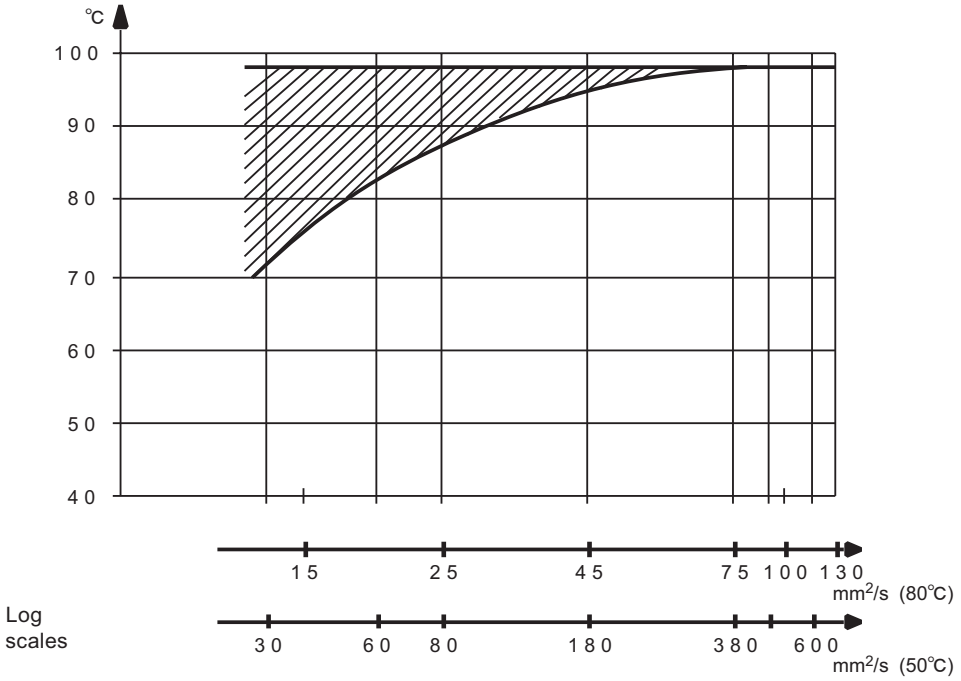

Plate 70506 Preheating of Heavy Fuel Oil
(Prior to Injection)

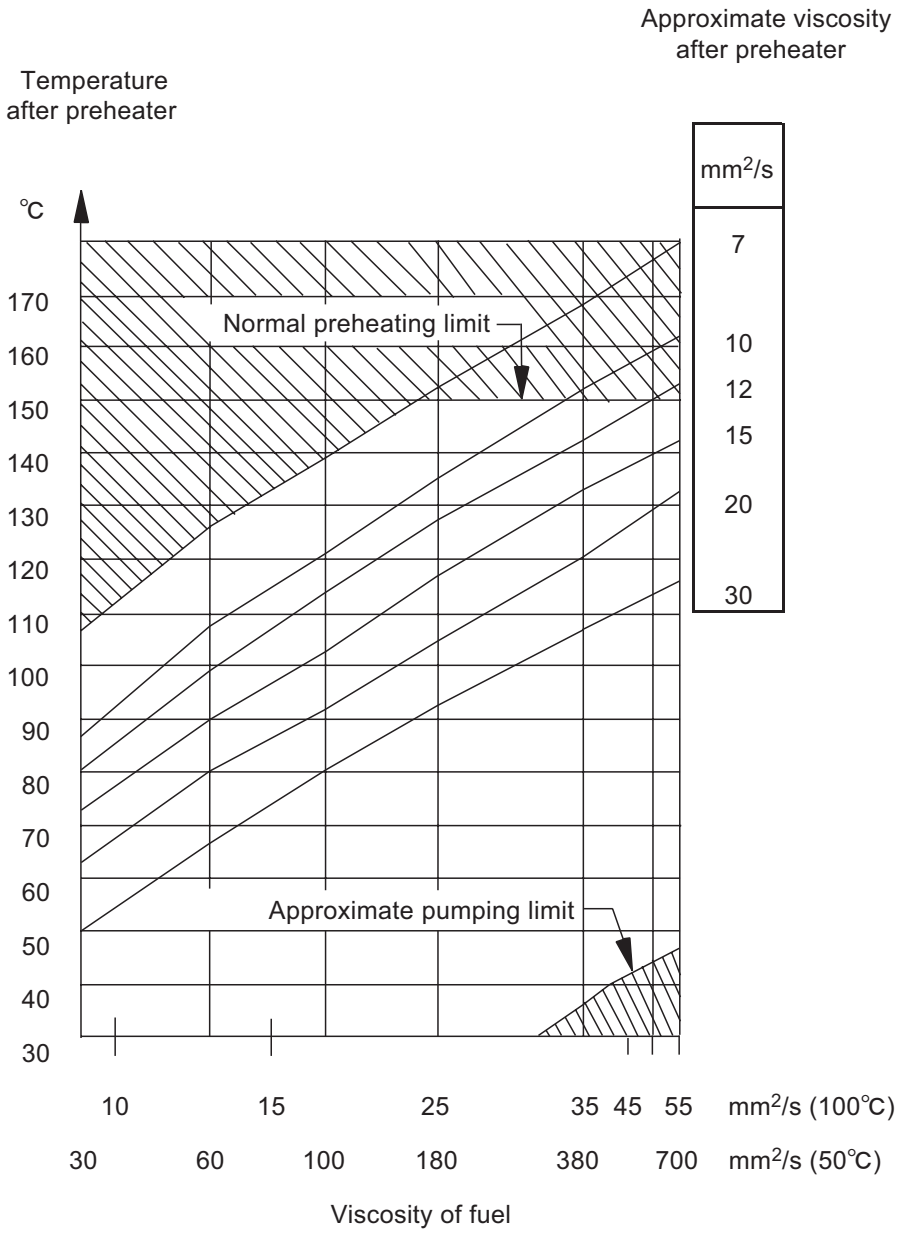

This chart is based on information from oil suppliers regarding typical marine fuels with viscosity index from 70 to 80.
Since the viscosity after the preheater is the controlled parameter, the preheating temperature may vary, dependent on the viscosity and viscosity index of the fuel.

Recommended viscosity meter setting is about from 10 to 15 mm^2/s.

701 SAFETY PRECAUTIONS AND ENGINE DATA

702 CHECKS DURING STANDSTILL PERIODS

703 STARTING, MANOEUVRING AND RUNNING

704 SPECIAL RUNNING CONDITINS

705 FUEL AND FUEL TREATMENT

706 PERFORMANCE EVALUATION & GENERAL OPERATION

707 CYLINDER CONDITION

708 BEARING AND CIRCULATING OIL

709 WATER COOLING SYSTEM

710 DATA

Chapter 706
Performance Evaluation and General Operation

Contents Page

Observations during Operation

1. Symbols and Units 706-05
2. Operating Range 706-06
   - 2.1 Load Diagram 706-06
   - 2.2 Definitions 706-06
   - 2.3 Limits for Continuous Operation 706-06
   - 2.4 Limits for Overload Operation 706-06
   - 2.5 Recommendations 706-07
   - 2.6 Propeller Performance 706-07
3. Performance Observations 706-07
   - 3.1 General 706-07
   - 3.2 Key Parameters 706-08
   - 3.3 Measuring Instruments 706-08
   - 3.4 Intervals between Checks 706-09
   - 3.5 Evaluation of Observations 706-09

Evaluation of Records

1. General 706-10
2. Engine Synopsis 706-10
   - 2.1 Parameters related to the Mean Indicated Pressure 706-10
     - Mean Draught 706-11
     - Mean Indicated Pressure 706-11
     - Engine Speed 706-11
     - Maximum Combustion Pressure 706-12
     - Fuel Index 706-12
   - 2.2 Parameters related to the Effective Engine Power 706-13
     - Temperature after Exhaust Valves 706-13
     - Increased Exhaust Temperature Level - Fault Diagnosing 706-14
     - Compression Pressure 706-15
     - Mechanical defects which can cause reduced compression pressure 706-17

Contents Page

3. Turbocharger Synopsis 706-17
Scavenge Air Pressure 706-18
Turbocharger Speeds 706-18
Pressure Drop across Turbocharger Air Filter 706-18
Turbocharger Efficiency 706-19
4. Air Cooler Synopsis 706-19
Temperature Difference between Air Outlet and Water Inlet 706-19
Cooling Water Temperature Difference 706-19
Pressure Drop across Air Cooler 706-19
4.1 Evaluation 706-20
4.2 Adjustment of Scavenge Air Temperature 706-21
5. Specific Fuel Oil Consumption 706-22

Cleaning of Turbochargers and Air Coolers

1. Turbocharger 706-24
1.1 General 706-24
1.2 Cleaning the Turbine Side 706-24
2. Air Cooler Cleaning System 706-25
3. Drain System for Water Mist Catchers 706-25
3.1 Condensation of Water 706-25
3.2 Drain System 706-27
3.3 Checking the Drain System 706-27

Contents Page

Appendix 1 Measuring Instruments

1. Thermometers and Pressure Gauges 706-29
2. The Indicator 706-29
   - 2.1 Indicator and Draw Diagrams 706-29
   - 2.2 Maintenance of the Indicator 706-30
   - 2.3 Indicator valve 706-31
   - 2.4 Fitting the Indicator 706-31
   - 2.5 Taking the Diagrams 706-32
   - 2.6 Diagram Faults 706-33
   - 2.7 Adjustment of Indicator Drive 706-33
3. PMI system 706-34

Appendix 2 Pressure Measurements and Engine Power Calculations

1. Compression Pressure, Maximum Pressure, and Faults 706-35
2. Area of Indicator Diagram 706-36
3. Calculation of Indicated and Effective Engine Power 706-36

Appendix 3 Correction of Performance Parameters

1. General 706-39
2. Correction 706-39
3. Example of Calculations 706-40
4. Maximum Exhaust Temperature 706-41

Appendix 4 Turbocharger Efficiency

1. General 706-43
2. Calculating the Efficiencies 706-43
   - 2.1 Plants without TCS and Exhaust By-Pass 706-43
   - 2.2 Plants with TCS and/or Exhaust By-Pass 706-45

Appendix 5 Estimation of the Effective Engine Power without Indicator Diagrams

1. General 706-46
2. Methods 706-46

Contents Page

Plates

Load Diagram for Propulsion alone 70601
Load Diagram for Propulsion and Main Engine Driven Generator 70602
Engine Data in Service 70603
Readings relating to Thermodynamic Conditions 70604
Synopsis Diagrams
for Engine 70605 - 70607
for Turbocharger 70608 - 70609
for Air Cooler 70610
Specific Fuel Oil Consumption 70611
Air Cooler Cleaning System 70614
Normal Indicator Diagram 70615
Adjustment of Indicator Drive 70616
Faulty Indicator Diagram 70617
Information from Indicator and Draw Diagrams 70618
Using the Planimeter 70619
Correction to ISO Reference Ambient Conditions
Maximum Combustion Pressure 70620
Exhaust Temperature 70621
Compression Pressure 70622
Scavenge Pressure 70623
Example of Readings 70624
Correction Factor for Fuel Pump Index 70627
Turbocharger Compressor Wheel Diameter and Slip Factor 70628

Cleaning Procedure for Turbocharger (TCA type) ME4069
(NA type) ME2899
(TPL type) ME4014
(VTR type) ME3488
(MET type) ME3444

Turbocharger Cleaning with Water (TCA type) ME4070
(NA type) ME2839
(TPL type) ME4015
(VTR type) ME1086

Cleaning of Air Cooler ME2890

Observations during Operation

1. Symbols and Units

Parameter	Symbol	Unit 1	Unit 2
Effective engine power	*Pe*	kW	bhp
Engine speeds	*speed*	min^{-1}	rpm
Indicated engine power	*Pi*	ikW	ihp
Fuel index	*Index*	(mm)	No.
Specific fuel oil consumption	*SFOC*	g/kWh	g/bhph
Fuel oil lower calorific value	*LCV*	kJ/kg	kcal/kg
Turbocharger speeds	*T/C speed*	min^{-1}	rpm
Barometric pressure	*pbaro*	Pa	mmHg
Pressure drop across T/C air filters	Δ *pf*	Pa	mmWC
Pressure drop across air coolers	Δ *pc*	Pa	mmWC
Scavenge air pressure	*pscav*	MPa *)	mmHg
Mean indicated pressure	*pi*	MPa *)	bar *)
Mean effective pressure	*pe*	MPa *)	bar *)
Compression pressure	*pcomp*	MPa *)	bar *)
Maximum combustion pressure	*pmax*	MPa *)	bar *)
Exhaust receiver pressure	*pexh*	MPa *)	mmHg
Pressure after turbine	*patc*	Pa	mmWC
Air temperature before T/C filters	*tinl*	°C	°C
Air temperature before cooler	*tbcoo*	°C	°C
Cooling water inlet temp. ,air cooler	*tcoolinl*	°C	°C
Cooling water outlet temp. ,air cooler	*tcoolout*	°C	°C
Scavenge air temperature	*tscav*	°C	°C
Temperature after exhaust valves	*texhv*	°C	°C
Temperature before turbine	*tbtc*	°C	°C
Temperature after turbine	*tatc*	°C	°C

Conversion factors:
1 bar = 0.1 MPa = 1/0.9807 kgf/cm^2
1 PS = 0.7355 kW
1 mbar = 1 hPa = 10.2 mmWC = 0.75 mmHg

*) Pressure stated in MPa (bar) is the measured value, i.e. read from an ordinary pressure gauge.
The official designation of MPa (bar) is ABSOLUTE PRESSURE.

2. Operating Range

2.1 Load Diagram

The specific ranges for continuous operation are given in the '"Load Diagrams":

– For propulsion alone, *Plate 70601*.
– For propulsion and main engine driven generator, *Plate 70602*.

2.2 Definitions

The load diagram, in logarithmic scales defines the power and speed limits for continuous as well as overload operation of an installed engine having a specified MCR point 'M' according to the ship's specification.

2.3 Limits for Continuous Operation

The continuous service range is limited by four lines:

Line ③: Represents the maximum speed which can be accepted for continuous operation.
Running at low load above 100% of the nominal speed of the engine is, however, to be avoided for extended periods.

Line ④: Represents the limit at which an ample air supply is available for combustion and gives a limitation on the maximum combination of torque and speed.

Line ⑤: Represents the maximum mean effective pressure (mep) level, which can be accepted for continuous operation.

Line ⑦: Represents the maximum power line for continuous operation.

2.4 Limits for Overload Operation

Many parameters influence the performance of the engine.
Among these is: overloading.
The overload service range is limited as follows:

Line ⑧: Represents the overload operation limitations.

The area between line ④, ⑤, ⑦ and the heavy dotted line ⑧ is available as overload for limited periods only (1 hour per 12 hours).

2.5 Recommendations

Continuous operation without limitations is allowed only within the area limited by lines ④, ⑤, ⑦ and ③ of the load diagram.

The area between lines ④ and ① is available for running conditions in shallow water, heavy weather and during acceleration, i.e. for non-steady operation without actual time limitation.

After some time in operation, the ship's hull and propeller will be fouled, resulting in heavier running of the propeller, i.e. loading the engine more.
The propeller curve will move to the left from line ⑥ to line ② and extra power is required for propulsion.
The extent of heavy running of the propeller will indicate the need for cleaning the hull and possibly polishing the propeller.

Point 'A' is a 100% speed and power reference point of the load diagram.
Point 'M' is normally equal to point 'A' but may in special cases, for example sometimes when a shaft generator is installed, be placed to the right of point 'A' on line ⑦.

2.6 Propeller Performance

Experience indicates that ships are - to a greater or lesser degree - sensitive to bad weather (especially with heavy waves, and with head winds and seas), sailing in shallow water with high speeds and during acceleration.

⚠ It is advisable to notice the power/speed combination in the load diagram and to take precautions when approaching the limit lines.

3. Performance Observations (*Plates 70603* and *70604*)

3.1 General

During engine operation, several basic parameters need to be checked and evaluated at regular intervals.

The purpose is to follow alterations in:
– the combustion conditions
– the general cylinder condition
– the general engine condition
in order to discover any operational disturbances.

This enables the necessary precautions to be taken at an early stage, to prevent the further development of trouble.
This procedure will ensure optimum mechanical condition of the engine components, and optimum overall plant economy.

3.2 Key Parameters

The key parameters in performance observations are:

- Barometric pressure
- Engine speed
- Ship's draught
- Mean indicated pressure
- Compression pressure
- Maximum combustion pressure
- Fuel index
- Exhaust gas pressures
- Exhaust gas temperatures
- Scavenge air pressure
- Scavenge air temperature
- Turbocharger speed
- Exhaust gas back pressure in exhaust pipe after turbocharger
- Air temperature before turbocharger filters
- Δp air filter
- Δp air cooler
- Air and cooling water temperatures before and after scavenging air cooler

3.3 Measuring Instruments

The measuring instruments for performance observations comprise:

- thermometers
- pressure gauges
- tachometers
- PMI system (Option); cylinder pressure measuring equipment
- CoCoS-EDS (Option) ; Computer Controlled Surveillance - Engine Diagnostics System
- indicator

It is important to check the measuring instruments for correct functioning. Regarding check of thermometers and pressure gauges as well as check and functioning of the indicator, see Appendix 1 in this Chapter.

3.4 Intervals between Checks

Constantly:

⚠ Temperature and pressure data should be constantly monitored, in order to protect the engine against overheating and failure.

In general, automatic alarms and slow-down or shut-down equipment are installed for safety.
Guiding values of permissible deviations from the normal service data are given in Chapter 703, "GUIDANCE LIMITS & MEASURING VALUES".

Daily:

Fill-in the Performance Observation record, *Plate 70603*.

Every two weeks:

Take indicator cards and fill-in the complete Performance Observations record, *Plates 70603*, see also Appendix 1 in this Chapter.

3.5 Evaluations of Observations

Compare the observations to earlier observations and to the test bed / sea trial result.
From the trends, determine when cleaning, adjustment and overhaul should be carried out.
See Chapter 703, regarding normal service values and alarm limits.

Not all parameters can be evaluated individually.
This is because a change of one parameter can influence another parameter.
For this reason, these parameters must be compared to the influencing parameters to ensure correct evaluations.

A simple method for evaluation of these parameters is presented in the next section, “Evaluation of Records”

Evaluation of Records

1. General

Record the performance observations as described in previous Section "Observations during Operation", Item 3.

Use the synopsis diagrams to obtain the best and most simple method of plotting and evaluating the parameters:

Engine: *Plates 70605, 70606, 70607*
Turbocharger: *Plates 70608, 70609*
Air cooler: *Plate 70610*

Plates 70605, 70606 and *70607* are sufficient to give a general impression of the overall engine condition.

The plates comprise:

Model curve:
shows the parameters as a function of the parameter on which it is most dependent (based on the test bed / sea trial results).

Time based deviation curve:
shows the deviation between the actual service observations and the model curve, as a function of time.
The limits for maximum recommended deviation are also show.

From the deviation curves, it is possible to determine what engine components should be overhauled.

Blank sheets:
Blank "Time based deviation" sheets which can be copied.
Use these sheets for plotting the deviation values for the specific engine.

The following items describe the evaluation of each parameter in detail.

2. Engine Synopsis

2.1 Parameters related to the Mean Indicated Pressure (*pi*).

Plates 70605 and 70606 (engine synopsis diagrams) show model curves for engine parameters which are dependent upon the mean indicated pressure (*pi*).

Plate 70605 also includes three charts for plotting the mean draught, the average mean indicated pressure, and the engine speed deviation as a function of the engine running hours.

Plate 70606 also includes two charts for plotting the *pmax* deviation, and the fuel index deviation as a function of the engine running hours.

For calculation of the mean indicated pressure, see Appendix 2 in this Chapter.
For engines without indicator drive or PMI-system, the estimated mean indicated pressure is read from *Plate 70606*.

Mean Draught

The mean draught is depicted here because, for any particular engine speed, it will have an influence on the engine load.

Mean Indicated Pressure (*pi*) (Indicator gear is as an option.)

The average calculated value of the mean indicated pressure is depicted in order that an impression of the engine's load can be obtained.

Load balance: the mean indicated pressure for each cylinder should not deviate more than 0.05 MPa from the average value for all cylinders.

⚠ The load balance must not be adjusted on the basis of the exhaust gas temperatures after each exhaust valve.

The fuel index must be steady.
Unbalances in the load distribution may cause the governor to be unstable.

Depending on the ship's specification, the PMI-system may be applied instead of indicator drive for easy access to P-V diagram (work diagrams), as an option.
It is recommended to confirm ship's specification.

Engine Speed (*speed*)

The model curve shows the relationship between the engine speed and the average mean indicated pressure (*pi*).

The engine speed should be determined by counting the revolutions over a sufficiently long period of time.

Deviations from the model curve show whether the propeller is light or heavy, i.e. whether the torque on the propeller is small or large for a specified speed.
If this is compared with the draught (under the same weather conditions), then it is possible to judge whether the alterations are owing to:

– changes in the draught, or
– an increase in the propulsion resistance, for instance due to fouling of the hull, shallow water, etc.

Valuable information is hereby obtained for determining a suitable docking schedule.

If the deviation from the model curve is large, (e.g. deviations from shop trial to sea trial), it is recommended to plot the results on a load diagram, and from that judge the necessity of making alterations on the engine, or to the propeller.

See also “Observations during Operation”, Item 2 in this Chapter.

Maximum Combustion Pressure (*pmax*)

The model curve shows the relationship between the average *pmax* (corrected to ISO reference ambient conditions) and the average mean indicated pressure (*pi*).
For correction to reference conditions, see Appendix 3 in this Chapter.

Deviations from the model curve are to be compared with deviations in the compression pressure and the fuel index (see further on).

At loads lower than 85 ~ 90% of specified MCR power, the *pmax* will increase in proportion to the fuel index.
At loads higher than 85 ~ 90%, the *pmax* is kept constant.
Such pressure pattern can be obtained only for engines equipped with Variable Injection Timing (VIT) fuel pump system.

⚠ If an individual *pmax* value deviates more than 0.3 MPa from the average value, the reason should be found and the fault corrected.

⚠ The pressure rise *pmax* – *pcomp* must not exceed the specified limit, i.e. 3.5 MPa.

Fuel Index

The model curve shows the relationship between the average fuel index and the average mean indicated pressure (*pi*).

Deviations from the model curve give information on the condition of the fuel injection equipment.
Worn fuel pumps, and leaking suction valves, will show up as an increased fuel index in relation to the mean pressure.
However, the fuel index is also dependent on:

– The viscosity of the fuel oil, (i.e. the viscosity at the preheating temperature).
  Low viscosity will cause larger leakage in the fuel pump, and thereby necessitate higher fuel indexes for injecting the same volume.

– The calorific value and the specific gravity of fuel oil.
  These will determine the energy content per unit volume, and can therefore also influence the fuel index.

– All parameters that affect the fuel oil consumption (ambient conditions, *pmax*, etc.)

Since there are many parameters that influence the fuel index, and thereby also the *pmax*, it can be necessary to adjust the *pmax* from time to time.

It is recommended to overhaul the fuel pumps when the fuel index has increased by about 10%.
In case the engine is operating with excessively worn fuel pumps, the starting performance of the engine will be seriously affected.

2.2 Parameters related to the Effective Engine Power (*Pe*)

Plate 70607 shows model curves for each engine parameters which are dependent on the effective engine power (*Pe*).

Regarding the calculation of effective engine power, see Appendix 2 in this Chapter.
For engines without indicator drive, the estimated effective engine power is found by using the fuel index as parameters, see Appendix 5 in this Chapter.

Depending on the ship's specification, the PMI-system may be applied instead of indicator drive for easy access to P-V diagram (work diagrams) and thereby the effective engine power, as an option.
It is recommended to confirm ship's specification.

Temperature after exhaust valves (*texhv*)

The model curve shows the average exhaust temperatures (after the valves), corrected to reference conditions, and drawn up as a function of the effective engine power (*Pe*).

For correction to ISO reference conditions, see Appendix 3 in this Chapter.
Regarding maximum exhaust temperatures, see also Appendix 3.

The exhaust temperature is an important parameter, because the majority of faults in the air supply, combustion and gas systems manifest themselves as increases in the exhaust temperature level.

The most important parameters, which influence the exhaust temperature, are listed in the following table, together with a method for direct diagnosing, where possible.

Increased Exhaust Temperature Level - Fault Diagnosing

Possible Causes	Diagnosis
a. Fuel injection equipment – Leaking or incorrectly working fuel valves (defective spindle and seat) – Worn fuel pumps	As these faults occur in individual cylinders, compare: – fuel indexes – indicator and draw diagrams See Appendix 2 in this Chapter. Check the fuel valves: – visually – by pressure testing Inadequate cleaning of the fuel oil can cause defective fuel valves and worn fuel pumps. If a higher wear rate occurs, the cause for this must be found and remedied.
b. Cylinder condition: – Bow-by, piston rings – Leakage exhaust valve	These faults occur in individual cylinders. – Compare the compression pressures from the indicator and draw diagrams. See Appendix 2 in this Chapter. – During engine standstill: Carry out scavenge port inspection. See Chapter 707, “Cylinder Condition”, Item 3. Check the exhaust valves.
c. Air coolers: – Fouled air side – Fouled water side	Check the cooling capability. See Item 4.
d. Climatic conditions: – Extreme conditions	Check cooling water and engine room temperature. Correct *texhv* to reference conditions. See Appendix 3 in this Chapter.
e. Turbocharger: – Fouling of turbine side – Fouling of compressor side	Use the turbocharger synopsis methods for diagnosing. See Item 3.
f. Fuel oil: – Type – Quality	Using heavy fuel will normally increase *texhv* by approx. 5 °C, compared to the use of gas oil. Further increase of *texhv* will occur when using fuel oils with particularly poor combustion properties. In this case, a reduction of *pmax* can also occur.

Compression Pressure (*pcomp*)

The model curve shows the relationship between the compression pressure (corrected to ISO reference ambient conditions) and the effective engine power (*Pe*).

For correction to ISO reference conditions, see Appendix 3 in this Chapter.

Deviation from the model curve can be due to:

a) a scavenge air pressure reduction.
b) – mechanical defects in the engine components (blow-by past piston rings, defective exhaust valves, etc. - see the following table).
   – excessive grinding of valve spindle and bottom piece.

It is therefore expedient and useful to distinguish between a) and b), and investigate how large a part of a possible compression reduction is due to a) or b).
This distinguishing is based on the ratio between
absolute compression pressure (*pcomp* + *pbaro*) and absolute scavenging pressure (*pscav* + *pbaro*) which, for a specific engine, is constant over the largest part of the load range (load diagram area).

The ratio is first calculated for the "new" engine, either from the test bed results, or from the model curve.
See the example below regarding:
– Calculating the ratio
– Determining the influence of mechanical defects

It should be noted that, the measured compression pressure, for the individual cylinders, could deviate from the average, owing to the natural consequence of air/gas vibrations in the receivers.
The deviations will, to some degree, be dependent on the load.
However, such deviations will be “typical” for the particular engine, and should not change during the normal operation.

When evaluating service data for individual cylinders, comparison must be made with the original compression pressure of the cylinder concerned, at the corresponding load.

Example:

The following four values can be assumed read from the model curves:

The barometric pressure	:	0.100 MPa
The scavenge pressure	:	0.225 MPa
This gave an absolute scavenge pressure	:	0.325 MPa
The average (or individual) compression pressure	:	11.5 MPa

which gave
an absolute compression pressure : 11.5 + 0.100 = 11.6 MPa

pcomp abs / *pscav abs* = 11.6 / 0.325 = 35.7

This value is used as follows for evaluating the data read during service.

Service Values:

pcomp = 10.1 MPa (average or individual)
pscav = 0.20 MPa
pbaro = 0.102 MPa

Calculated on the basis of *pscav* and *pbaro*, the absolute compression pressure would be expected to be:

pcomp abs = 35.7 × (0.20 + 0.102) = 10.78 MPa
i.e.
pcomp = 10.78 – 0.102 = 10.68 MPa

The difference between the expected 10.68 MPa and the measured 10.1 MPa could be owing to mechanical defects or grinding of exhaust valve spindle and bottom piece.

Concerning the pressure rise *pmax* – *pcomp*, see Item 2.1.

Mechanical defects which can cause reduced compression pressure

Possible cause	Diagnosis / Remedy
a. Piston rings: – Leaking	Diagnosis: See table “Increased Exhaust Temperature Level – Fault Diagnosing”, point b. Remedy: See Chapter 703, “Starting-up, Manoeuvring, and Arrival in Port”, Item 4.2, point 7.
b. Piston crown: – Burnt	Check the piston crown by means of a template. See instruction book “MAINTENANCE”, Procedure 902-3.
c. Cylinder liner: – Worn	Check the liner be means of the measuring tool. See instruction book “MAINTENANCE”, Procedure 903-2.
d. Exhaust valve: – Leaking – Timing	The exhaust temperature rises. A hissing sound can possibly be heard at reduced load. Remedy: See Chapter 703, “Starting-up, Manoeuvring, and Arrival in Port”, Item 4.2, point 7. Check: – Cam lead – Hydraulic oil leakage, e.g. misalignment of high pressure pipe between exhaust valve actuator and hydraulic cylinder. – Damper arrangement for exhaust valve closing.
e. Piston rod stuffing box: – Leaking	Air is emitted from the check funnel from the stuffing box. Small leakages may occur, but this is normally considered a cosmetic phenomenon. Remedy: (extreme case) Overhaul the stuffing box, See instruction book “MAINTENANCE”, Chapter 902.

3. Turbocharger Synopsis

Plates 70608 and *70609* (Turbocharger synopsis diagrams) show model curves for turbocharger parameters.

Regarding cleaning of the turbochargers, see Section “Cleaning of Turbochargers and Air Coolers”, further on in this Chapter.

Scavenge Air Pressure (*pscav*)

The model curve shows the scavenge air pressure (corrected to ISO reference conditions) as a function of the effective engine power (*Pe*).

See Appendices 2 and 5 regarding the effective engine power.
For correction to ISO reference ambient conditions, see Appendix 3.

Deviations in the scavenge air pressure are, like the exhaust temperature, an important parameter for an overall estimation of the engine condition.

A drop in the scavenge air pressure, for a given load, will cause an increase in the thermal loading of the combustion chamber components.

A simple diagnosis, made only from changes in scavenge air pressure, is difficult.
Fouled air filters, air coolers and turbochargers can greatly influence the scavenge air pressure.

Changes in the scavenge air pressure should thus be seen as a "consequential effect" which is closely connected with changes in:
– the air cooler condition
– the turbocharger condition
– the cam timing

Turbocharger Speeds (*T/C speed*)

The model curve shows the speed of the turbocharger as a function of the scavenge air pressure (*pscav*).

Corroded nozzle ring or turbine blades will reduce the turbine speed.
The same thing will happen in case of a too large clearance between the turbine blades and the cover ring.

Deviation from the model curve, in the form of too high speed, can normally be attributed to a fouled air filter, scavenge air cooler, or compressor side.

A more thorough diagnosing of the turbocharger condition can be made as outlined in the below, "turbocharger efficiency"

Pressure Drop across Turbocharger Air Filter (Δpf)

The model curve shows the pressure drop across the air filter as a function of the scavenge air pressure (*pscav*).

Deviations from this curve give direct information about the cleanliness of the air filter.

Like the air cooler, the filter condition is decisive for the scavenge air pressure and exhaust temperature levels.
The filter elements must be cleaned when the pressure drop is 50% higher than the test bed value.

Turbocharger Efficiency (η *T/C*)

The model curves show the compressor and turbine efficiencies as a function of the scavenge air pressure (*pscav*).

In order to determine the condition of the turbocharger, the calculated efficiency values are compared with the model curves, and the deviations plotted.
Calculation of the efficiency is explained in Appendix 4 to this Chapter.

As the efficiencies have a great influence on the exhaust temperature, the condition of the turbocharger should be checked if the exhaust temperature tends to increase up to the prescribed limit.

Efficiency reductions can normally be related to "flow deterioration", which can be counteracted by regular cleaning of the turbine side.

4. Air Cooler Synopsis

Plate 70610 (Air cooler synopsis diagrams) shows model curves for air cooler parameters which are dependent upon the scavenge air pressure (*pscav*).

Regarding cleaning of air coolers, see Section “Cleaning of Turbochargers and Air Coolers”, further on in this Chapter.

Temperature Difference between Air Outlet and Water Inlet (Δ *tair/water*)

The model curve shows the temperature difference between the air outlet and the cooling water inlet, as a function of the scavenge air pressure (*pscav*).

This difference in temperature is a direct measure of the cooling ability, and as such an important parameter for the thermal load on the engine.
The evaluation of this parameter is discussed in Item 4.1.

Cooling Water Temperature Difference (Δ *twater*)

The model curve shows the cooling water temperature increase across the air cooler, as a function of the scavenge air pressure (*pscav*).

The evaluation of this parameter is discussed in Item 4.1.

Pressure Drop across Air Cooler (Δ *pair*)

The model curve shows the scavenge air pressure drop across the air cooler, as a function of the scavenge air pressure (*pscav*).

The evaluation of this parameter is discussed in Item 4.1.

4.1 Evaluation

Generally, for the above three parameters, changes of approximately 50% of the test bed value can be considered as a maximum.
However, the effect of the altered temperatures should be kept under observation in accordance with the remarks in Item 2.2, “Exhaust Temperature”.

In the case of pressure drop across air cooler, for purposes of simplification, the mentioned "50% margin" includes deviations caused by alterations of the suction temperature, scavenge air temperature, and efficiency of the turbochargers.

Of the three air cooler parameters, the temperature difference between air outlet and water inlet, is to be regarded as the most essential one.

Deviations from the model curves, which are expressions of deteriorated cooling capability, can be due to:

a) Fouling of the air side: manifests itself as an increased pressure drop across the air side.

   However, the heat transmission can also be influenced by an "oily film" on tubes and fins, and this will only give a minor increase in the pressure drop.

   Before cleaning the air side, it is recommended that the U-tube manometer is checked for tightness, and that the cooler is visually inspected for deposits.

   Make sure that the drainage system from the water mist catcher functions properly, as a high level of condensed water (condensation) - up to the lower measuring pipe - might greatly influence the Δ *pair* measuring.
   See also "Cleaning of turbochargers and Air Coolers", Item 3.

b) Fouling of the water side: Normally involves a reduction of the cooling water temperature difference, because the heat transmission (cooling ability) is reduced.

   However, if the deposits reduce the cross sectional area of the tubes, so that the water quantity is reduced, the cooling water temperature difference may not be affected, whereby diagnosis is difficult. (i.e. lower heat transmission, but also lower flow volume).

   Furthermore, a similar situation will arises if such tube deposits are present simultaneously with a fault in the salt water system, (corroded water pump, erroneous operation of valves, etc.).
   Here again the reduced water quantity will result in the temperature difference remaining approximately unaltered.

In cases where it is suspected that the air cooler water side is obstructed, the resistance across the cooler can be checked by means of a differential pressure gauge.
A mercury manometer pressure should not be used, because of environmental considerations.

Before dismantling the air cooler, for piercing of the tubes, it is recommended that the remaining salt-water system is examined, and the cooling ability of the other heat exchangers is checked.

⚠ Be careful when piecing because the pipes are thin-walled.

4.2 Adjustment of Scavenge Air Temperature

⚠ If adjustment of scavenge air temperature is carried out by operating the valve(s) of cooling water for scavenge air cooler, following troubles may arise.

- In case that the water quantities is reduced, the cooling sea water temperature is increased, and thus the salt may condense inside the tubes. This may cause the blocking of the tubes.
- The cooling water velocity is too low, the scale and/or bacterium may adhere on the tubes, which also block the tube.

⚠ Adjust the scavenge air temperature according to below procedure.

1) The valve for scavenging air cooler should be opened to keep the designed flow.
For a specific plant, refer the piping diagrams supplied by the shipyard.

2) It can be recommend that the cooling water inlet temperature for scavenge air cooler is adjust within 25 ~ 28 °C, by adjusting the temperature control valve for cooling water.

For engine performance, lower scavenge air temperature is better, however, this may given an amount of condensed water.
This adjustment can minimise such condensed water, and thus not to fill a clean drain tank in short period.

Also, the cooling sea water outlet temperature is to be bellow 50 °C.

<u>In service operation:</u>
- Temperature difference between inlet and outlet of cooling water for air cooler is around 13 ~ 17 °C.
- Temperature difference between scavenging air cooler cooling water inlet and scavenging air temperature is around 7 ~ 15 °C.

If the temperature difference(s) are over these values, fouling of air cooler and/or reduced cooling water quantity, by operating valves for cooling water, is to be considered.

5. Specific Fuel Oil Consumption (*Plate 70611*)

Calculation of the specific fuel oil consumption requires that engine power, and the consumed fuel oil amount , are known for a certain period of time.

The method of determining the engine power is illustrated in Appendix 2.
For engine without indicator drive, see Appendix 5.

The fuel oil amount is measured as described below.

To achieve a reasonable measuring accuracy, it is recommended to measure over a suitably long period.
The measurements should always be made under calm weather conditions.

– If a day tank is used, the time for the consumption of the whole tank contents will be suitable.
– If a flow-meter is used, a minimum of 1 hour is recommended.

Since both of the above-mentioned quantity measurements will be in volume units, it will be necessary to know the oil density, in order to convert to weight units.
The density is to correspond to the fuel oil temperature at the measuring point (i.e. in the day tank or flow-meter).

The specific gravity, (and thus density) can be determined by means of a hydrometer immersed in a sample taken at the measuring point, but the density can also be calculated on the basis of bunker specifications.
Normally, in bunker specifications, the specific gravity is indicated at 15 °C.

The actual density at the measuring point is determined by using the curve on *Plate 70611*, where the change in density is shown as a function of temperature.

The consumed oil quantity is obtained by multiplying the measured volume by the density.

In order to be able to compare consumption measurements carried out for various types of fuel oil, allowance must be made for the differences in the lower calorific value (*LCV*) of the fuel concerned.

Normally, on the test bed, diesel oil will have been used.
If no other instructions have been given by the ship owner, measured value is converted to lower calorific value of approximately 42,700 kJ/kg.

Usually, the lower calorific value of a bunker oil is not specified by the oil companies.
However, by means of the graph, *Plate 70611*, the LCV can be determined with sufficient accuracy, on the basis of the sulphur content, and the specific gravity at 15 °C.

The corrected consumption can then be determined by multiplying the "measured consumption":

LCV / 42700
(*LCV* : the specific calorific value, in kJ/kg, of the bunker oil concerned)

Example: (6S60MC-C)

Effective Engine Power (*Pe*)	:	13560 kW
Consumption (*Co*)	:	8.357 m^3
Measuring period (*h*)	:	3 hours
Measuring point temperature	:	119 °C
Fuel data	:	Specific gravity 0.9364 g/cm^3 at 15°C, 3% sulphur

Density at 119 °C (see *Plate 70611*):
$\rho 119$ = 0.9364 – 0.068 = 0.8684 g/cm^3

Specific consumption:
$Co \times \rho 119 \times 10^6 / (h \times Pe)$
$= 8.357 \times 0.8684 \times 10^6 / (3 \times 13560)$
= 178.4 g/kW-h

Correction to ISO reference conditions regarding the specific lower calorific value:

Consumption corrected for calorific value:

LCV = 40700 kJ/kg, derived from *Plate 70611*.
178.4 × 40700 / 42700 = 170.0 g/kW-h

The ambient conditions (blower inlet temperature and pressure and scavenge air coolant temperature) will also influence the fuel consumption. Correction for ambient conditions is not considered important when comparing service measurements.

Cleaning of Turbochargers and Air Coolers

1. Turbocharger

1.1 General

It is recommended to clean the turbochargers regularly during operation.
This prevents the build-up of heavy deposits on the rotating parts and keeps the turbochargers in the best running condition between manual overhauls.

The intervals between cleaning during operation should be determined from the degree of fouling of the turbocharger in the specific plant.
This is because the tendency to form deposits depends, among other things, on the combustion properties of the actual fuel oil.

Guiding intervals between cleaning are given for each cleaning method in the following items.

If the cleaning is not carried out at regular intervals, the deposits may not be removed uniformly.
This will cause the rotor to be unbalanced, and excite vibrations.

– If vibrations occur after cleaning:
  clean again.
– If vibrations occur after repeated cleaning:
  see Chapter 704, “Running with Cylinders or Turbochargers out of Operation”, Item 5, and clean the turbochargers manually at the first opportunity,

Manual overhauls are still necessary to remove deposits which the cleaning during operation does not remove, in particular on the non-rotating parts.
Regarding intervals between the manual overhauls, see the instructions book “COMPONENT DESCRIPTION (ACCESSORIES)”.

1.2 Cleaning the Turbine Side

Dry Cleaning

Carry out the cleaning according to the instruction given on attached:
– ME4069 (for the TCA type of T/C)
– ME2899 (for the NA type of T/C)
– ME4014 (for the TPL type of T/C)
– ME3488 (for the VTR type of T/C)
– ME3444 (for the MET type of T/C)
and also refer the instructions book “COMPONENT DESCRIPTION (ACCESSORIES)”.

Water Cleaning

Carry out the cleaning according to the instruction given on attached:
– ME4070 (for the TCA type of T/C)
– ME2839 (for the NA type of T/C)
– ME4015 (for the TPL type of T/C)
– ME1086 (for the VTR type of T/C)
and refer also the instructions book “COMPONENT DESCRIPTION (ACCESSORIES)”.

2. Air Cooler Cleaning System (*Plate 70614*)

⚠ Carry out the cleaning only when the engine is standstill.

This is because the water mist catcher is not able to retain the cleaning fluid. Thus there would be a risk of fluid being blown into the cylinders, causing excessive liner wear.

The procedure is described in attached ME2890, and refer also the instruction book "MAINTENANCE", Chapter 910.

3. Drain System for Water Mist Catcher

3.1 Condensation of Water

A combination of high air humidity and low cooling water temperature tends to cause an amount of condensed water to be separated from the scavenge air in the water mist catcher.

Estimation of condensate from the water mist catcher drain

The amount of condensate from the water mist catcher(s) can be estimated based on the below listed measurements and *Plate 70713A* and *70713B*.

- *Engine load* [kW]
- Ambient air temperature [°C]
- Relative humidity of ambient air [%]
- Scavenge air pressure [MPa abs]
- Scavenge air temperature [°C]

Calculation procedure

1) The amount of water vapour in the intake air, *Mambient* [kg/kWh], is found in *Plate 70713A* based on measurements of ambient air temperature and relative humidity.

2) The maximum amount of water vapour in the scavenge air, *Mscavenge* [kg/kWh], is found in *Plate 70713B* based on measurements of scavenge air pressure and temperature.

3) The expected amount of condensate, *Mcondens* [kg/h], is calculated by:

Mcondens = *k* × *Engine load* × (*Mambient* – *Mscavnege*)

where
k : 1.05 for K80 ~ K98 type engines
1.00 for S50 ~ S90 and L50 ~ L70 type engines
0.90 for S26 ~ S46 and L35 ~ L42 type engines

*) The tolerance of the result is ± 10%
No water condensation occurs, if the result is negative.

The sea water temperature may alternatively be used in *Plate 70713A* instead of the ambient air temperature.
The 100% relative humidity curve applies, if the sea water temperature is used.

Example of estimation of condensate amount:

Readings:
- Engine type : 7K80MC-C
- *Engine load* : 22,700 kW
- Ambient air temperature : 30 °C
- Relative humidity : 85 %
- Scavenge air pressure : 0.325 MPa abs
- Scavenge air temperature : 45 °C

Calculation procedure:

1) *Mambient* = 0.21 kg/kWh, found from *Plate 70713A*.

2) *Mscavenge* = 0.17 kg/kWh, found from *Plate 70713B*.

3) Mcondens = *k* × *Engine load* × (*Mambient* – *Mscavnege*)
= 1.05 × 22700 × (0.21 – 0.17)
= 953.4 kg/h

where
k = 1.05 for K80 type engine

The condensate amount is estimated to be 950 kg/h (22.8 t/day) ± 10% in this example.

The estimation of condensate amount is based on nominal air amount for the engine and even distribution of the air outlet temperature from the scavenge air cooler.
The expected condensate amount should, therefore, be taken as rough guidance in case of small amounts of condensate (between –0.01 and 0.01 kg/kWh).

3.2 Drain System (*Plate 70614*)

– Orifice with by-pass valve type
Condensed water will be drained off from the water mist catcher through the sight glass, the orifice with manually operated by-pass valve to clean drain tank.

The size of the orifice in the drain system is designed to be able to drain off the amount of condensed water under average running conditions.

In case of running under special conditions with high humidity, it can be necessary to open the by-pass valve on discharge line a little by manual.
Close the by-pass valve when possible to reduce the loss of scavenge air.

A level-alarm will set off alarm in case of too high water level at the drain.
Check the alarm device regularly to ensure correct functioning.

– Auto drain trap type
Condensed water will be drained off from the water mist catcher through the sight glass, and the valve with orifice to clean drain tank.
The auto drain trap valve is connected in parallel to the valve with orifice.

The size of the orifice in the drain system is designed to be able to drain off the amount of condensed water under average running conditions.

In case of running under special conditions with high humidity, the auto drain trap valve automatically discharges the drain.
The valve closes automatically when the drain quantity is reduced.

– Orifice with stop valve type
Condensed water will be drained off from the water mist catcher through the sight glass, the manually operated stop valve to clean drain tank.

In case of running under special conditions with high humidity, it can be necessary to open the by-pass valve on discharge line a little by manual.
Close the by-pass valve when possible to reduce the loss of scavenge air.

3.3 Checking the Drain System

During the engine running, discharging condition of the condensed water is to be observed from the sight glass on mist catcher drain pipe line.
If staying of water is seen, it is recommended to discharge it by opening the by-pass valve or the stop valve, to avoid the invasion of condensed water into the combustion chamber.

However, if opening the by-pass valve or the stop valve fully, scavenging air pressure may abnormally lower.
So opening degree of said valve should be adjusted watching the discharging condition of condensed water through the sight glass.

⚠ The inside of auto drain trap valve, if equipped, to be checked regularly and cleaned at least every 3 months.
If this valve is clogged, the condensed water will enter into the cylinder, and thus may cause excessive liner wears.

Moreover, in case the sight glass can not be seen through, it should be cleaned and it is recommended to clean the sight glass in a fixed period.

– A mixed flow of air and water indicates a correctly working system where condensation takes place.
– A flow of water only, indicates malfunctioning of the system.
  Check the orifice for blocking
  Check the auto drain trap valve function, if equipped.
  Check for any restrictions in the discharge pipe.
  Check the level alarm, if equipped.
– A flow of air is only normal when running under dry ambient conditions.
  A sight glass which is completely filled with clean water, and with no air flow, visually looks like an empty air-filled sight glass.

Appendix 1 Measuring Instruments

1. Thermometers and Pressure Gauges

The thermometers and pressure gauges fitted on the engine are often duplicated with instruments for remote indication.
Owing to differences in the installation method, size of sensing elements, and design of pockets, the two sets of instruments cannot be expected to give exactly the same readings.

During shop test and sea trials, readings are taken from these local instruments.
Use these values as the basis for all evaluations.
Check the thermometers and pressure gauges at intervals against calibrated control apparatus.

Thermometers should be shielded against air currents from the engine room ventilation.
If the temperature permits, keep thermometer pockets filled with oil to ensure accurate indication.

Keep all U-tube manometers perfectly tight at the joints.
Check the tightness from time to time by using soap-water.
To avoid polluting environment, do not use mercury instruments.

Check that there is no water accumulation in tube bends.
This would falsify the readings.

If cocks or throttle valves are incorporated in the measuring equipment, check these for free flow, prior to taking readings.

If an instrument suddenly gives values that differ from normal, consider the possibility of a defective instrument.
The easiest method of determining whether an instrument is faulty or not, is to exchange it for another.

2. The Indicator

The indicator is employed for taking indicator/draw diagrams, whereby the combustion chamber pressures can be measured while the engine is running.

Indicator cams and indicator driving gears are OPTION item.
If they are not installed on the engine, only draw diagrams can be taken.

2.1 Indicator and Draw Diagrams

The draw diagram is used for measuring the compression pressure and maximum pressure, and for evaluating the ignition characteristics of the fuel oil.

The indicator diagram (P-V diagram: work diagram), illustrates the pressure variations in the engine cylinder as a function of the main piston position.
The indicator diagram area can be integrated by means of a planimeter, and the mean indicated pressure calculated.

The power developed in the particular cylinder can then be found by multiplication by the engine speed and the cylinder constant, see Appendix 2, Item 3.

In order to ensure true indicator/draw diagrams, and correct evaluation of data, the following instructions should be followed in detail.

2.2 Maintenance of the Indicator

Friction in the indicator piston movement, as well as slackness in the stylus (writing) mechanism, will distort both the shape and the area of the indicator diagram.
Test and maintain the indicator in the following way:

Friction and tightness of piston

1) Remove the indicator spring.
Dismantle the upper part of the indicator, and remove the piston from the cylinder.
Wipe the piston and cylinder with a clean cloth.
Mount the upper part again.
During mounting, check the piston sinks slowly down the liner, by its own weight, when the cylinder is held vertically.

2) Hold the indicator upright.
Pull the piston to the upper position.
Block the bottom of the cylinder with a finger.
Check that the piston fits so tightly that it remains in the upper position.
Push the piston downwards and release.
Check that the piston springs back to the upper position.

3) Tighten the top screw, which retains the spring, firmly against the ball-head of the spring.
Check that the ball is not loose on the spring (older spring types).
Check that the coils of the spring have not worked loose at the soldered joint in the base.

Stylus (writing) mechanism

1) Check that the stylus is sharp.
Check for slackness in the writing mechanism.
Replace any worn parts.

2) Adjusted the stylus so that, with a light writing pressure, a single passage over the paper can just be seen.
To obtain a sufficiently distinct work diagrams, the stylus should be sharp, but not sharp enough to scratch the paper.

3) Lubricate the mechanism with thin oil.

2.3 Indicator Valve

During the running of the engine, soot and oil will accumulate in the indicator bore of the cylinder cover.
Clean the bore by opening the indicator valve for a moment, before mounting the indicator.

⚠ **WARNING**
When opening the indicator valve, keep clear of the line of ejection, as burning combustion gas can be blown out.

⚠ To protect the valve against burning:
- open the valve only partially,
- close the valve after one or two ignitions.

2.4 Fitting the Indicator

1) Dismantle the upper part.
Give the piston a little cylinder oil.

2) Check that the various recesses are clean.
Otherwise the parts could be positioned askew, and this would cause the piston to move sluggishly in the cylinder.

3) Mount the upper part.
Fit the indicator and the cord.
Engage the indicator drive.

4) Check the cord alignment.
Adjust the length of the indicator cord so that:
- the diagram is traced in the centre of the paper
- the cord is tight in all positions

2.5 Taking the Diagrams

For diagram descriptions and nomenclature, see *Plate 70615*.

1) Atmospheric line:

Keep the indicator valve closed.
Press the stylus against the paper.
Release the stylus when the indicator drive has turned the drum one or two times.

2) Indicator/draw diagram:

a) Indicator diagram: for engines fitted with indicator drive or PMI-system.

Open the indicator valve.
Press the stylus against the paper.
Release the stylus, when the drum has turned two or three times.
Close the indicator valve.

b) Draw diagram: for engines fitted without indicator drive.

Release the cord.
Open the indicator valve.
Watch the movement of the stylus.
At the moment it moves upwards, simultaneously
– press it against the paper
– pull the cord just quickly enough for the stylus to traces the compression and ignition sequence
Close the indicator drive.

This operation requires some practice to ensure that both compression and maximum pressure are clearly recorded.

If the indicator quickly becomes very hot, and the piston is black after use, then this means that there is a leakage.
In such a case, exchange the piston and liner.
See also Item 2.2.

3) Check that the diagrams have been correctly taken and are distinct.

Normal indicator and draw diagrams are shown in the illustration, *Plate 70615*.
Example of incorrect diagrams and possible causes are shown on *Plate 70617*. See also Item 2.6.
Regarding pressure evaluation and engine power calculation, see Appendix 2.

4) Repeat Item 2.3, 2.4 and 2.5 for the remaining cylinders.

Lubricate the piston with a drop of cylinder oil after about six diagrams have been taken.

When diagram taking is finished, unscrew the indicator head.
Clean and lubricate both the cylinder and the piston with cylinder oil.

2.6 Diagram Faults

The most common faults are shown on *Plate 70617*, in Figs. 1 to 6.

Fig.1: For engines fitted with indicator drive:
Vibrations in the cord, or drive, give a wavy indicator diagram, but a smooth draw diagram.

Fig.2 and 3: For engines fitted with indicator drive:
The drum hits the stop at one of the end points, before the diagram is completed.
The cord is too long or too short.

Fig. 4: The indicator piston works sluggishly in the cylinder, and moves by jerks.
If only the expansion curve is wrong (wavy), the cause may be gas pulsations in the combustion chamber or indicator bore.

Fig. 5: The indicator spring is too weak.
The piston strikes against the top of the indicator cylinder.
Change to a more rigid spring.

Fig.6: The indicator valve leaks.
Gives an untrue atmospheric line.

2.7 Adjustment of Indicator Drive (*Plate 70616*)

The paper drum of the indicator is driven by the indicator drive, which is activated by the indicator cam on the camshaft, in line with the corresponding cylinder.

The indicator drive must be adjusted so that the position of the paper drum at any moment corresponds to the position of the main piston, when taking the diagrams.
This ensures correct indicator diagrams.

Check the adjustment of the individual indicator drives regularly, and after disassembling in the following way:

1) Prepare the indicator valve and indicator for taking diagrams.
See Items 2.3 and 2.4.

2) Cut-off fuel injection in one cylinder:
– Reduce the load to 35 ~ 50 % of MCR power (70 ~ 80% of MCR speed).
– Pull the fuel rack for the cylinder concerned to '0' index.

Alternatively, lift the roller guide, and then start the engine and load to 35 ~ 50 % of MCR power (70 ~ 80% MCR speed), see instruction book "MAINTENANCE", Procedure 909-5.

3) Trace the compression and expansion lines.
Follow the procedure in Item 2.5, point 2).
The compression line is traced when the engine piston moves upwards, and the expansion line is traced when the engine piston moves downwards.

4) Evaluate the diagram:

Do the compression line and the expansion line coincide ?

YES: The indicator drive correctly adjusted.
See also *Plate 70616*, Fig 1.

NO: The indicator drive is incorrectly adjusted.
See also *Plate 70616*, Fig 2.
Adjust the indicator drive.
See also *Plate 70616*, Case A and Case B.

3. PMI system

The PMI-System (option) is designed to provide engineers and service personnel onboard ship with a computerized tool for pressure measurements and analysis on two-stroke diesel engines.

The main advantages of the system are:

– Off line / On line measurement of cylinder pressure.
– Graphic display and print out of PT, PV and Balance Diagram, together with Mean Indicated Pressure and Maximum Pressure deviation limits.
– Calculated values of Effective engine power (*Pe*), Mean Indicated pressure (*pi*), Compression pressure (*pcomp*), Maximum combustion pressure (*pmax*), and Scavenge air pressure (*pscav*), including proposed values for index adjustments, etc.
– Software interface for use with engine performance and engine diagnostics software, e.g. CoCoS-EDS (option).

Appendix 2 Pressure Measurements and Engine Power Calculations

Regarding taking the diagrams, see Appendix 1 in this Chapter.

1. Compression Pressure, Maximum Pressure, and Faults (*Plate 70618 ,70615*)

Measure the compression pressure and maximum pressure on the cards, responds to the stiffness of the indicator spring used.

Compare the measurement results to the normal values for the actual engines.
Figs. 1 ~ 3 show some typical examples of engine maladjustment and faults which can be derived from the indicator and draw diagrams.

Fig. 1: Maximum pressure too low, but compression pressure correct.

Fuel injection delayed, check:
- the fuel pressure at engine (after the filter).
- the fuel valves function.
- the fuel pump suction valve, puncture valve, and shock absorber.
- VIT index, if equipped.

If the above are in order, the fuel oil is injected too late in relation to its ignition characteristics.
Exceptionally heavy residual fuels can have very poor ignition qualities.

Increase the fuel pump lead.
See the instruction book "MAINTENANCE", Chapter 909.

Fig. 2: Maximum pressure too high, but compression pressure normal.

Too early injection.
Check VIT index, if equipped.
If this is in order, reduce the fuel pump lead.
See the instruction book "MAINTENANCE", Chapter 909.

Fig. 3: Compression and maximum pressures both too low.

Possible causes:
- piston ring blow-by.
- leaking exhaust valve.
- increased combustion space volume, e.g. piston crown burnt.
- low scavenge air pressure, e.g. fouling of exhaust and/or air system.
- defective or maladjusted damping arrangement in the exhaust valve.

See also Appendix 3, and “Evaluating of Records”, Item 2.2.

2. Area of Indicator Diagram (*Plate 70619*)

For engines fitted with indicator drive:

If the planimeter is adjustable, check the setting before use.
For checking, use the reference template, or the area of an accurately drawn rectangle or circle.

Place the planimeter and indicator card on a piece of plane card board (not too smooth), as shown in the illustration.
Trace the diagram as described in *Plate 70619*.

Only consider the result satisfactory, when two readings are obtained which do not differ more than “1” on the planimeter vernier scale.

3. Calculation of the Indicated and Effective Engine Power

For engines without indicator drive, see Appendix 5 in this Chapter.

Calculation of the indicated and effective engine power consists of the following steps:

- the mean indicated pressure (*pi*)
- the mean effective pressure (*pe*)
- the cylinder constant (*k2*)
- the indicated engine power (*Pi*)
- the effective engine power (*Pe*)

The mean indicated pressure (*pi*)

$pi = A / (L \times Cs)$ [MPa]

where
A : area of the indicator diagram, as found by planimetering. [mm^2]
L : length of the indicator diagram (= atmospheric line). [mm]
Cs : spring constant [mm/MPa]
= vertical movements of the indicator stylus [mm] for a 0.1 MPa pressure rise in the cylinder.

pi corresponds to the height of a rectangle with the same area and length as the indicator diagram.
i.e., if *pi* was acting on the piston during the complete downward stroke, the cylinder would produce the same total work as actually produced in one complete revolution.

The mean effective pressure (*pe*)

$pe = pi - k1$ [MPa]

where:
k1 : the mean friction loss

The mean friction loss has proved to be practically independent of the engine load and engine type.

By experience, *k1* has been found to be approximately:
- 0.10 MPa : for except below engines,
- 0.12 MPa : for S/L35MC engines,
- 0.17 MPa : for S26MC engine.

The cylinder constant (*k2*) (See Table 1)

k2 is determined by the dimensions of the engine, and the units in which the power is wanted.

For power in kW : $k2 = 13.0900 \times D^2 \times S$
For power in BHP : $k2 = 17.7974 \times D^2 \times S$

where:
D : cylinder diameter [m]
S : piston stroke [m]

The indicated engine power (*Pi*)

$Pi = k2 \times speed \times pi$ [ikW/cyl. or ihp/cyl.]

where:
speed : engine speeds [min^{-1}]

The effective engine power (*Pe*)

$Pe = k2 \times speed \times pe$
$= k2 \times speed \times (pi - k1)$ [kW/cyl. or bhp/cyl.]

Due to the friction in the thrust bearing, the shaft power is approximately 1% less than the effective engine power.

Table 1 The cylinder constant (*k2*)

Engine type	*k2*	
	For power in kW	For power in BHP
K98MC	33.441	45.466
K98MC-C	30.172	41.022
S90MC-C	33.802	45.958
K90MC	27.037	36.761
K90MC-C	24.387	33.157
S80MC-C	26.808	36.449
S80MC	25.602	34.809
L80MC	21.715	29.524
K80MC-C	19.268	26.198
S70MC-C	17.959	24.418
S70MC	17.151	23.319
L70MC-C	15.137	20.581
L70MC	14.547	19.779
S60MC-C	11.310	15.377
S60MC	10.801	14.685
L60MC-C	9.5285	12.955
L60MC	9.1609	12.455
S50MC-C	6.5450	8.8987
S50MC	6.2505	8.4983
L50MC	5.3015	7.2079
S46MC-C	5.3513	7.2758
S42MC	4.0732	5.5380
L42MC	3.1403	4.2697
S35MC	2.2449	3.0523
L35MC	1.6837	2.2892
S26MC	0.86719	1.1790

Appendix 3 Correction of Performance Parameters

1. General

Some measured performance parameters need to be corrected to ISO ambient conditions to facilitate reliable evaluation.

These parameters are: *pmax*, *texhv*, *pcomp* and *pscav*.
See also “Observations during Operation“, Item 3.

Making such corrections enables comparison to earlier (corrected) readings or model curves, regardless of deviations of the actual *tinl* and *tcoolinl* from reference conditions.

I.e. the correction provides the values, which would have been measured, if *tinl* and *tcoolinl* had been 25 °C.

Record the corrected value as described in Section, “Evaluation of Records” in this Chapter.

Use the following reference conditions:

Air temperature before T/C filters : *tinl* = 25 °C
Cooling water inlet temperature, air cooler : *tcoolinl* = 25 °C

The air inlet temperature can vary greatly, depending on the position in which it is measured on the T/C filter.
Experience has shown that two thermometers situated at ten o’clock and four o’clock positions (i.e. 180° apart) and at the middle of the filter give a good indication of the average temperature.

See also *Plate 70610*, regarding Δt (= *tscav* – *tcoolinl*), the difference between the scavenging air temperature and the cooling water inlet temperature.

2. Correction

The correction for variations in *tinl* and *tcoolinl* from reference conditions can be carried out in two ways:

a) By reading:

See *Plate 70624*, which shows how to use *Plates 70620 ~ 70623* to determine the correction.

b) By calculation:

The corrections can be determined by the general equation:

Acorr = (*tmeas* – *tref*) × *F* × (*K* + *Ameas*)

where:

Acorr : the correction to be applied to the parameter
tmeas : measured *tinl* or *tcoolinl*
tref : reference *tinl* or *tcoolinl* (in case of Standard Conditions, 25 °C)
F1, *F2* : constant, see the table below
K : constant, see the table below
Ameas : the measured parameter to be corrected, i.e. *pmax*, *texh*, *pcomp* or *pscav*

See *Plates 70620 ~ 70623*, which show how to use the formulas.

parameter to be corrected	*F1*: for air inlet temp	*F2*: for cooling water inlet temp	*K*
texhv	-2.466×10^{-3}	-0.590×10^{-3}	273
pscav	$+2.856 \times 10^{-3}$	-2.220×10^{-3}	*pbaro* 0.1 MPa
pcomp	$+2.954 \times 10^{-3}$	-1.530×10^{-3}	*pbaro* 0.1 MPa
pmax	$+2.198 \times 10^{-3}$	-0.810×10^{-3}	*pbaro* 0.1 MPa

3. Examples of Calculations

See *Plate 70624*, which states a set of service readings.

a) Correction of *texhv* (*Plate 70621*)

Measured: Temperature after exhaust valves : 425 °C
Air temperature before T/C filters : 42 °C
Cooling water inlet temp.,air cooler : 40 °C

Correction for air inlet temperature:
$(42 - 25) \times (-2.466 \times 10^{-3}) \times (273 + 425) = -29.3$ °C

Correction for cooling water inlet temperature:
$(40 - 25) \times (-0.590 \times 10^{-3}) \times (273 + 425) = -6.2$ °C

The corrected *texhv* value:
425 – 29.3 – 6.2 = 389.5 °C

b) Correction of *pscav* (*Plate 70623*)

Measured:	Scavenge air pressure	:	0.20 MPa
	Air inlet temperature	:	42 °C
	Cooling water inlet temperature	:	40 °C

Correction for air inlet temperature:
$(42 – 25) \times (2.856 \times 10^{-3}) \times (0.1 + 0.20) = 0.0146$ MPa

Correction for cooling water inlet temperature:
$(40 – 25) \times (– 2.220 \times 10^{-3}) \times (0.1 + 0.20) = – 0.010$ MPa

The corrected *pscav* value:
$0.20 + 0.0146 – 0.010 = 0.2046$ MPa

Corrections of *pcomp* (*Plate 70622*) and *pmax* (*Plate 70620*) can be made in a similar manner.

4. Maximum Exhaust Temperature

The engine is designed to allow a limited increase of the thermal loading, i.e. increased of *texhv*.
This enables the engine to operate under climatic alterations and under normal deteriorated service condition.

Whether the engine exceeds this built-in safety margin for thermal loading can be evaluated as follows.

The factors contributing to increased exhaust temperature levels (and thereby thermal loads) and the largest permissible deviation values are:

• due to fouling of turbocharger (including air intake filters) and exhaust uptake	:	+ 30 °C
• due to fouling of air coolers	:	+ 10 °C
• due to deteriorated mechanical condition (estimate)	:	+ 10 °C
• due to climatic (ambient) conditions	:	+ 45 °C
• due to operation on heavy fuel, etc.	:	+ 15 °C
Total	:	+ 110 °C

Regarding increasing exhaust temperatures, see also "Evaluation of Records", Item 2.2.

For new engines it is not unusual to observe a temperature increase of 50 ~ 60 °C from the shop test to the sea trial.
This is due to the operation on heavy fuel oil and altered climatic conditions.

If the temperature increases further during service:
– Find the cause of the temperature increase.
– Clean, repair or overhaul the components in question at the first opportunity, to improve the engine performance.

⚠ The exhaust temperature must not exceed the alarm limit, see Chapter 703, “Guidance Alarm Limits and Measuring Values”.

To evaluate the exhaust temperature correctly, it is important to distinguish between:
– exhaust temperature increase due to fouling and mechanical condition
– exhaust temperature increase due to climatic alterations

The method to distinguish between the factors is shown in the example.

Example: (approximately 95% engine load)

Measured: Temperature after exhaust valves (*texhv*) : 425 °C
Air temperature before T/C filters (*tinl*) : 42 °C
Cooling water inlet temp.,air cooler (*tcoolinl*) : 40 °C

Estimated: Exhaust temperature according to a model curve : 375 °C

Exhaust temperature increase due to climatic alteration:

The total correction 33 °C (= 27 + 6), to be applied to the estimated exhaust temperature 375 °C, is due to:

Correction due to increased engine room temperature : 27 °C
$(42 – 25) \times (– 2.466 \times 10^{-3}) \times (273 + 375) = – 27.2$ °C

Correction due to increased cooling water inlet temperature : 6 °C
$(40 – 25) \times (– 0.590 \times 10^{-3}) \times (273 + 375) = – 5.7$ °C

Distinguish between the factors:

The actual exhaust temperature increase of 50 °C (= 425 – 375), is distinguished between:
– due to climatic alterations : 33 °C
– due to fouling and mechanical condition : 17 °C (= 50 – 33)

Appendix 4 Turbocharger Efficiency

1. General

To record the turbocharger efficiencies, see “Evaluation of Records”, Item 3.
Plate 70609 shows model curves for compressor and turbine efficiencies, based on the scavenge air pressure.

For general evaluation of the engine performance, it is unnecessary to calculate turbocharger efficiencies.
However, if such calculations are desired, they can be carried out as described below.

2. Calculating the Efficiencies

The total turbocharger efficiency is the product of the compressor, turbine, and mechanical efficiencies.
However, the last one has almost no effect on the efficiency calculations, and is therefore omitted.

When calculating the turbocharger efficiency, it is necessary to distinguish between:
– plants without Turbo Compound System (TCS) and exhaust by-pass.
– plants with TCS and/or exhaust by-pass.

2.1 Plants without TCS and Exhaust By-Pass

Measure the parameters listed in Table 1.
It is essential that, as far as possible, the measurements are taken simultaneously.
Convert all pressures to the same unit.

Table 1: Measurement items for calculation of efficiencies

Parameter	Symbol	Unit	Example
barometric pressure	*pbaro*	MPa	0.1006 MPa
Pressure drop across air coolers	Δ *pc*	MPa	0.0034 MPa
Air temperature before T/C filters	*tinl*	°C	31.2 °C
Turbocharger speeds	*T/C speed*	min^{-1}	12100 min^{-1}
Scavenge air pressure	*pscav*	MPa	0.2560 MPa *)
Exhaust receiver pressure	*pexh*	MPa	0.2450 MPa *)
Pressure after turbine	*patc*	MPa	0.0023 MPa *)
Temperature before turbine	*tbtc*	°C	412.9 °C

*) gauge pressure, note that the official designation of bar is "absolute pressure"

The total efficiency (η *tot*)

$$\eta\ tot = 0.9265 \times MA / MX \times T1 / T2 \times (R1^{0.286} - 1) / (1 - R2^{0.265})$$

T1 : *tinl* + 273
T2 : *tbtc* + 273
R1 : (*pbaro* + *pscav* + Δ *pc*) / *pbaro*
R2 : (*pbaro* + *patc*) / (*pbaro* + *pexh*)
MF : Fuel mass flow through turbine
MX : Exhaust gas mass flow through turbine
MA : Air mass flow through compressor
= *MX* – *MF*
If *MA* or *MX* unknown ; *MA* / *MX* = 0.9817

The compressor efficiency (η *compr*)

$$\eta\ compr = 3628800 \times T1 \times (R1^{0.286} - 1) / (\mu \times U^2)$$

μ : slip factor, see *Plate 70628*.
D : Diameter of compressor wheel, see *Plate 70628*.
U : The peripheral speed of the compressor wheel
= π × *D* × *T/C speed*

The turbine efficiency (η *turb*)

$$\eta\ turb = \eta\ tot / \eta\ compr$$

Example:

The turbocharger used in this example is MITSUI-MAN B&W TCA77, and measurement results is obtained as table 1:

T1 = *tinl* + 273.15 = 31.2 + 273 = 304.35 K
T2 = *tbtc* + 273.15 = 412.9 + 273.15 = 686.05 K
R1 = (*pbaro* + *pscav* + Δ *pc*) / *pbaro*
= (0.1006 + 0.2560 + 0.0034) / 0.1006
= 3.579
R2 = (*pbaro* + *patc*) / (*pbaro* + *pexh*)
= (0.1006 + 0.0023) / (0.1006 + 0.2450)
= 0.2977
D = 0.752
μ = 0.745
U = π × *D* × *T/C speed* = 3.14159 × 0.752 × 12100 = 28590
MF = 0.63 kg/s
MX = 31.85 kg/s
MA = *MX* – *MF* = 31.85 – 0.63 = 31.22 kg/g

Therefore,

$$\eta\ tot = 0.9265 \times MA / MX \times T1 / T2 \times (R1^{0.286} - 1) / (1 - R2^{0.265})$$
$$= 0.9265 \times 31.22 / 31.85 \times 304.35 / 686.05 \times (3.579^{0.286} - 1) / (1 - 0.2977^{0.265})$$
$$= 0.646$$

$$\eta\ compr = 3628800 \times T1 \times (R1^{0.286} - 1) / (\mu \times U^2)$$
$$= 3628800 \times 304.35 \times (3.579^{0.286} - 1) / (0.745 \times 28590^2)$$
$$= 0.798$$

$$\eta\ turb = \eta\ tot / \eta\ compr = 0.646 / 0.798$$
$$= 0.810$$

2.2 Plants with TCS and/or Exhaust By-Pass

The equation $\eta\ tot$ stated in Item 2.1 is based on a situation where
(the mass flow through the turbine)
= (the mass flow through the compressor + the fuel oil amount).

If a TCS or an exhaust by-pass is fitted, the mass flow through the turbine is reduced by the mass flow through the TCS or the exhaust by-pass.

The mass flows through the turbine and the TCS or through the turbine and exhaust by-pass are proportional to the effective areas in the turbines or the orifice in the exhaust by-pass.

Calculate the turbocharger efficiency as described in Item 2.1.
Then correct the results in accordance with the following:

<u>The total efficiency</u> ($\eta\ tot$)

$$\eta\ tot = (Aeff + aeff) / Aeff \times 0.9265 \times MA / MX \times T1 / T2 \times (R1^{0.286} - 1) / (1 - R2^{0.265})$$

where
Aeff : Effective area in turbocharger turbine
aeff : Effective area in TCS or exhaust by-pass

The relation (*Aeff* + *aeff*) / *Aeff* can vary from plant to plant, but is most often about 1.07.
This value can be used when evaluating the trend of the efficiency in service.

<u>The compressor efficiency</u> ($\eta\ compr$)

$\eta\ compr$ is unchanged, as it is not affected by whether the plant operates with TCS/by-pass or not.

<u>The turbine efficiency</u> ($\eta\ turb$)

$$\eta\ turb = (Aeff + aeff) / Aeff \times 0.9265 \times MA / MX \times T1 / T2 \times (R1^{0.286} - 1) / (1 - R2^{0.265}) / \eta\ compr$$

Appendix 5 Estimation of the Effective Engine Power without Indicator Diagrams

1. General

The estimation is based on nomograms involving the engine parameter measurements taken on test bed.
A condition for using following method is that the engine timing and turbocharger matching are unchanged from the test bed.

2. Methods (See *Plate 70627* and "INSTRUCTION MANUAL FOR ADJUSTMENT & MEASUREMENT")

Corrected fuel pump index method

To estimate the effective engine power accuracy, use the following "corrected fuel pump index".

Corrected fuel pump index is obtained by correcting average fuel pump index for the differences in fuel quality, gravity, lower calorific value and preheating temperature and for the change of the ambient conditions.
Mean effective pressure can be found in the sheet in which the relation between the corrected fuel pump index and the mean effective pressure is shown on the basis of the test bed results.

The relation between the corrected fuel oil pump index and the mean effective pressure is obtained for each engine form the test bed.
The sheet showing this relation and the procedure for power calculation and the *Plate 70627* are attached in the "INSTRUCTION MANUAL FOR ADJUSTMENT & MEASUREMENT" which is issued for each engine.

The effective power calculated by this method may include some amount of errors.
These are caused mainly by that reading accuracy of fuel pump index is influenced by the stability of the engine load during the measuring period, and that the relation between the fuel pump index and the mean effective pressure may be different from that at the test bed if an operating point of the engine is on a different propeller curve.

So, this effective power is to be basically used as a parameter for relative evaluation of the engine performance and diagnosis of the engine condition in service.

When more accurate effective power as an absolute value is required at the official sea trial, it is necessary to decide the effective power after comparing the other engine data such as turbocharger speed and scavenge air pressure and etc. with the test bed results and confirming propriety of the obtained value.

Data necessary for power calculation:

Fuel oil data:	Density (at 15 °C) Lower calorific value of fuel [MJ/kg or kcal/kg] (if this is not known, it is possible to estimate it from fuel gravity and sulphur content.)
Engine observations:	Engine speeds [min^{-1}] Average fuel pump index ($P\theta$) Air temperature before T/C filters (*tinl*) Scavenge air temperature (*tscav*)

Corrected fuel pump index ($P\theta'$)

$P\theta' = P\theta \times K$
$K = K1 \times K2 \times$ (fuel oil density at 15 °C)

where
$P\theta$: average fuel pump index.
K : correction factor for fuel pump index.
K1 : correction factor for fuel oil quality and change of ambient conditions.
K2 : correction factor for fuel oil gravity at preheated condition. (NB: capital letter)

From the density scale, a line is drawn to the right in the monogram to the sulphur content and vertically up to the line for fuel oil lower calorific value. If the caloric value of the fuel is known, it is able to start at this value and continue as follows:

From the lower calorific value, a line is drawn vertically to the line, which is the sum of *tinl* and *tscav*, and from that point horizontally to the left.
A correction factor *K1* for the fuel oil quality and the change of ambient conditions is found.

From the density scale, a line is drawn to the left, up to the temperature line for fuel oil before fuel pump, and form that point vertically up.
A correction factor *K2* for the fuel oil gravity at preheated condition is found.

Estimated effective power (*Pe*)

$Pe = k2 \times speed \times pe$

where
k2 : cylinder constant (see Appendix 2 in this part) (NB: lowercase letter)
speed: engine speeds [min^{-1}]
pe : mean effective pressure [MPa]

Example

Engine type:	6L60MC		
Fuel oil data:	Density (15 °C)	:	0.947 g/cm^3
	Lower calorific value of fuel	:	40610 kJ/kg
	(Sulphur content	:	2.9%)
Engine observations:	Engine speeds	:	111 min^{-1}
	Average fuel pump index	:	70.6
	Air temp. before T/C filters	:	30 °C
	Scavenge air temperature	:	32 °C
	Fuel oil temp. before fuel pump	:	104 °C

From *Plate 70627* :
K1 = 0.953, *K2* = 0.926

Therefore, corrected fuel pump index $P\theta'$ is

$P\theta'$ = 70.6 × 0.953 × 0.926 × 0.947 = 59

If *pe* = 1.155 MPa is obtained from the relation the corrected fuel pump index and the mean effective pressure, the estimated effective power is:

Pe = *k2* × *n* × *pe*
= 9.1609 × 111 × 1.155
= 1174 kW/cyl.

Plate 70601 Load Diagram for Propulsion alone

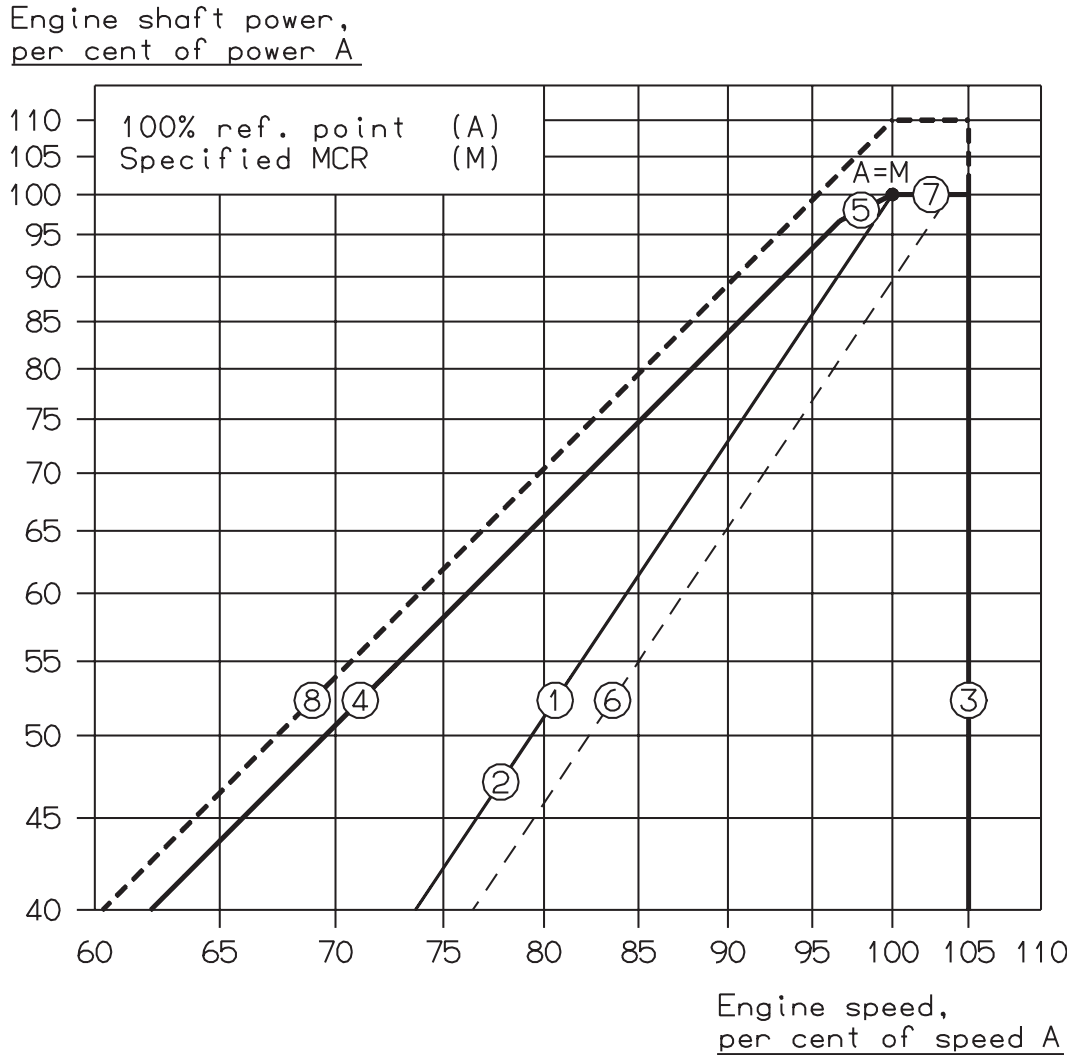

Line 1	:	Propeller curve through point A.
Line 2	:	Propeller curve – heavy running, recommended limit. for fouled hull at calm weather conditions.
Line 3	:	Speed limit.
Line 4	:	Torque/speed limit.
Line 5	:	mean effective pressure limit.
Line 6	:	Propeller curve – light running (range: 2.5 ~ 5.0 %) for clean hull and calm weather conditions.
Line 7	:	Power limit for continuous running.
Line 8	:	Overload limit.

Plate 70602 Load Diagram for Propulsion and Main Engine Driven Generator

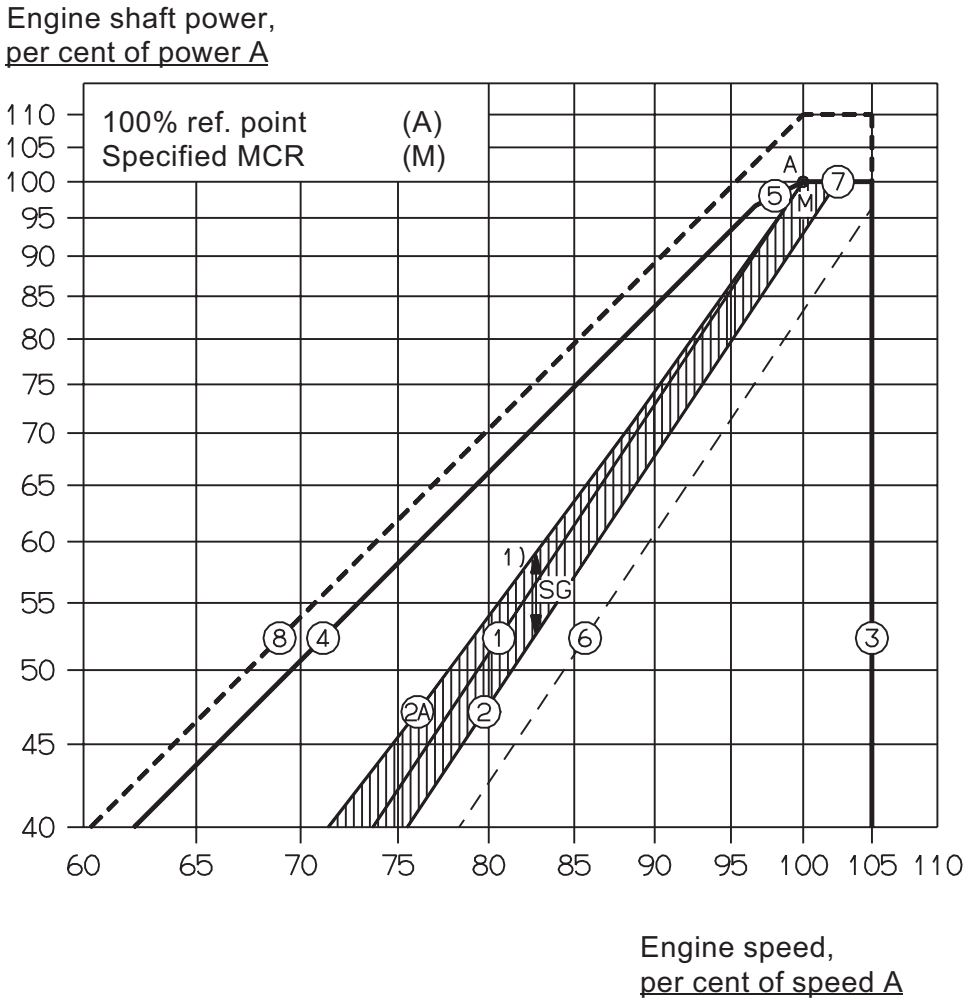

Line 1	:	Propeller curve through point A.
Line 2	:	Propeller curve for propulsion alone – heavy running, recommended limit. for fouled hull at calm weather conditions.
Line 2A	:	Engine service curve for propulsion (line 2) and shaft generator (SG).
Line 3	:	Speed limit.
Line 4	:	Torque/speed limit.
Line 5	:	mean effective pressure limit.
Line 6	:	Propeller curve for propulsion alone – light running (range: 2.5 ~ 5.0 %) for clean hull and calm weather conditions.
Line 7	:	Power limit for continuous running.
Line 8	:	Overload limit.

Note : The propeller curve for propulsion alone in found by subtracting the actual shaft generator power (incl. generator efficiency) from the effective engine power at maintained speed.

Data Sheet for Main Engine

SHIP NAME													
Main Engine Type	**Mitsui B&W**		S. No.		MES ENo.		TE No.						
Voyage No.		From:		To:		Total Run. Hours:							
Date & Hour		Hour From:		Hour To:		Last Docking Date							
Loading/Unloading		Draft. Fore:		Draft. Aft:		Number of F.Notch or L.I. :		RPM:					
Weather		Wind Direct		Wind Force		State of Sea:		Slip(%)					
Temperature	Eng. Room		Speed	By O.G.		k'ts	Sea Margine		%	Barometric Press			
	Sea Water			By Pitch		k'ts	Displacement		KT		hPa		

No. of Cylinder		Ave.	1	2	3	4	5	6	7	8	9	10	11	12
Max. Pressure	MPa													
Pressure Compression	MPa													
Pressure Indication	MPa													
I.P.S	kW													
Exhaust Temp.	deg C													
Pump Mark														
VIT Index														
F.W. Outlet	deg C													
P.C.O Outlet	deg C													
Cyl. Oil Feed Amount	l/day													
Stuffing Box Drain	l/day													

No. of Turbo Charger		Ave.	1	2	3	4
R.P.M						
Exhaust Gas Temperature (deg C)	Inlet					
	Outlet					
T/C Suction Temperature (deg C)						
Pressure Drop kPa	T/C Filter					
	Air Cooler					
Scavenge Air Temperature (deg C)	Inlet					
	Outlet					
A/C Cooling Water Temperature (deg C)	Inlet					
	Outlet					

Exh. receiver pressure	MPa													
Exh. inlet pressure	MPa													
Exh. back pressure	kPa													
Economizer draft loss	kPa													
Press:	MPa	L.O.		P.C.O		Jacket. W		S.W.		F.O.		Scav. Air		
Temp:	deg C	L.O.		P.C.O		Jacket. W		S.W.		F.O.		Scav. Air		
F.O. Received at:			LCV:		MJ/kg	Density@15deg C:		vis.: @50deg C:			cSt			
Fuel Oil Consumption:			m3/Hr	at:		deg C	mass:		Ton/day	Sulpher:		(%)		
Cyl. Oil MAKER/TYPE:			Cyl. Oil Consumption:			l/day		kg/day	Density@15deg C:					
Scav. Box drain:				l/day	Axial Vibration Monitor(Peak to Peak displacement):							mm		
Fuel Consumption Rate:				g/kWh	Cylinder Oil Consumption Rate:							g/kWh		
ENTRY:					APPROVAL:									

kW = PS x 0.7355
MPa = kg/cm2 x 0.0980665
g/kWh = g/PS/hr x 1/0.7355

EXHAUST TEMPERATURE,
measured at turbocharger inlet.

EXHAUST TEMPERATURE:
increaing on all cylinders indicates:
a) Air systen fouled
(air filter / blower / cooler /
scavenge ports)
b) Exhaust system fouled
(nozzle ring / turbine wheel /
exhaust gas boiler

INLET AIR TEMPERATURE:
Rising ambient temperature
will give increasing exhaust
temperature.

PRESSURE DROP across air filer:
Increasing Δp indicates fouling.
Cleaning required when Δp is
50% greater than on testbed.

PRESSURE DROP across
air cooler:
Increasing Δp indicates fouling
of air side.
Cleaning required when Δp is
50% greater than on testbed.

TEMPERATURE RISE of cooling
water:
Increasing temperature difference
indicates reduced water flow.

TEMPERATURE DIFFERENCE
air after cooler and at water inlet:
Increasing temperature difference
indicates fouling air cooler.

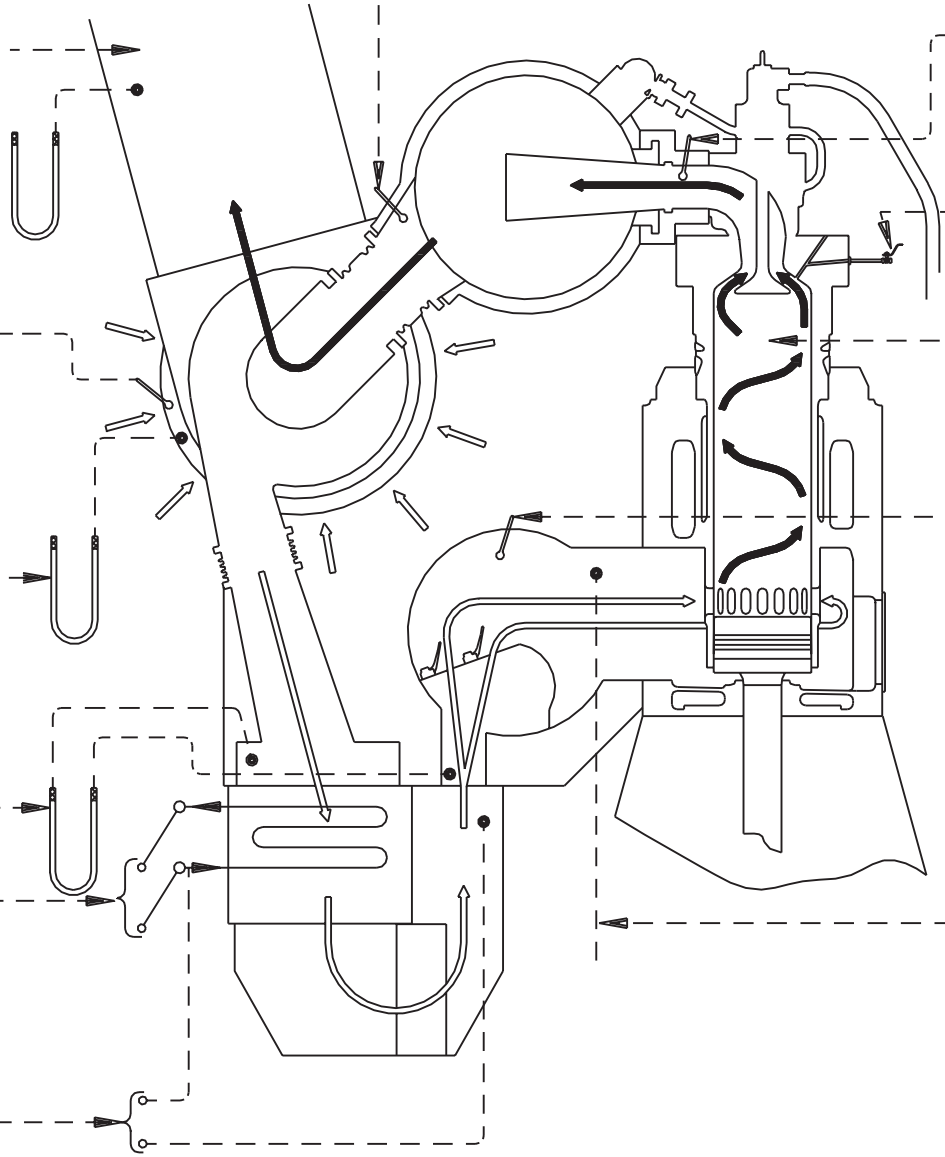

EXHAUST TEMPERATURE
increasing on a single cylinder indicates:
a) Fuel valves nedd overhaul
b) Compression pressure too low
owing to exhaust valve leakage
or blow-by past piston rings.

Draw diagram:
Draw diagram give compression and
maximum combustion pressure.

PRESSURES in combustion
chamber will be reduced by
piston ring blow-by; burnt piston
top; leaking exhaust valve;
defective fuel valves; etc.

SCAVENGE AIR TEMPERATURE:
Rising scavenge air temperature
will give increasing exhaust temperature.

SCAVENGE AIR PRESSURE:
Decreasing air pressure implies
decreasing air quantity and
indicates fouling of air or gas system.

Plate 70605 Synopsis Diagram – for Engine

Time based deviation charts for :
mean draught , average mean indicated pressure (pi).
Model curves + time based deviation charts for :
speed as a function of pi

M/V	Engine Type		Time Based Deviation Charts	Checked by :
	Builder	No.		
Yard	Built Year			Date :

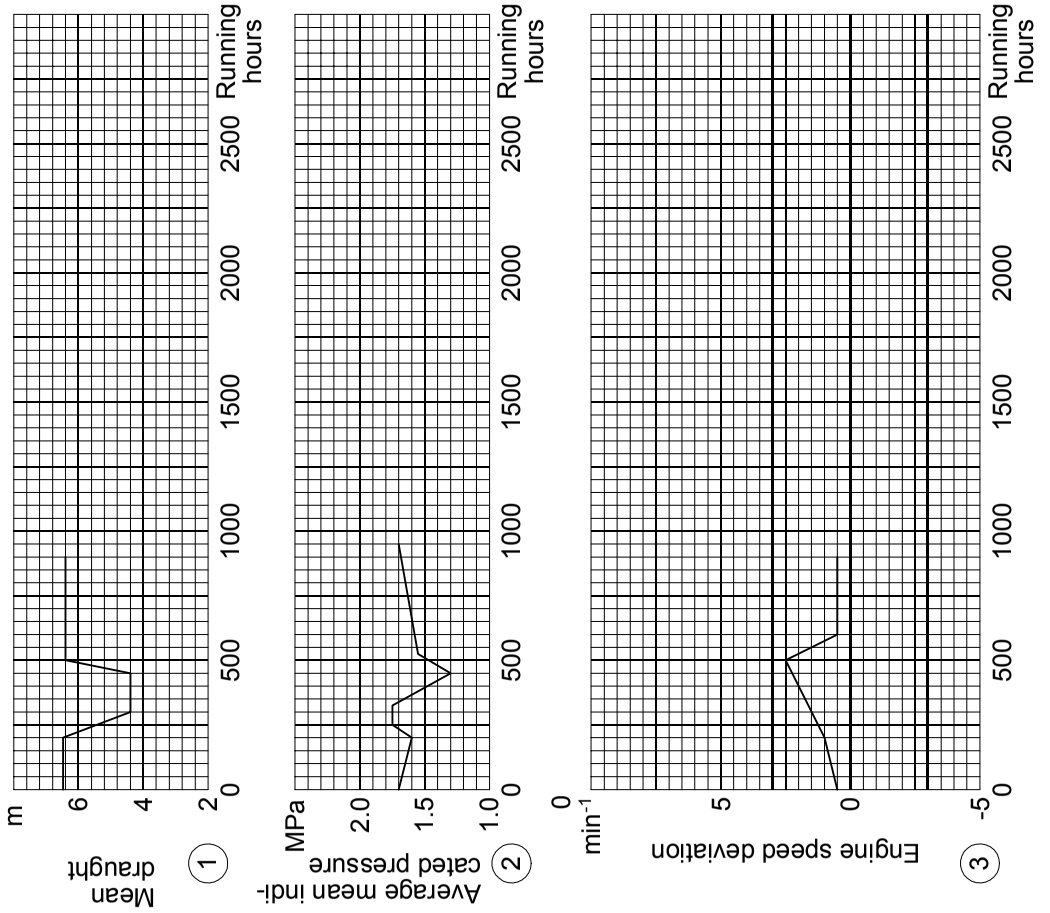

All the model curves are based on test results from shop trial or sea trial.

Direction for use:
Service results are plotted faintly in the Model Curve diagrams. The vertical deviations are transferred to the pertaining Time based Deviation-chart (on the right hand side).

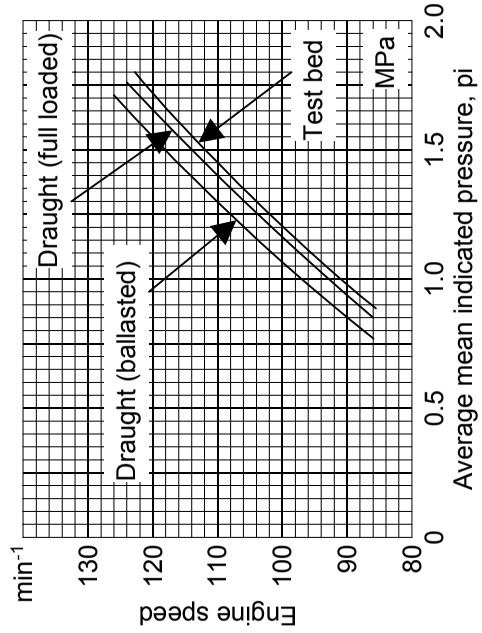

Plate 70605 Synopsis Diagram – for Engine
(Blank Copy)

Time based deviation charts for :
mean draught, average mean indicated pressure (pi), and speed.

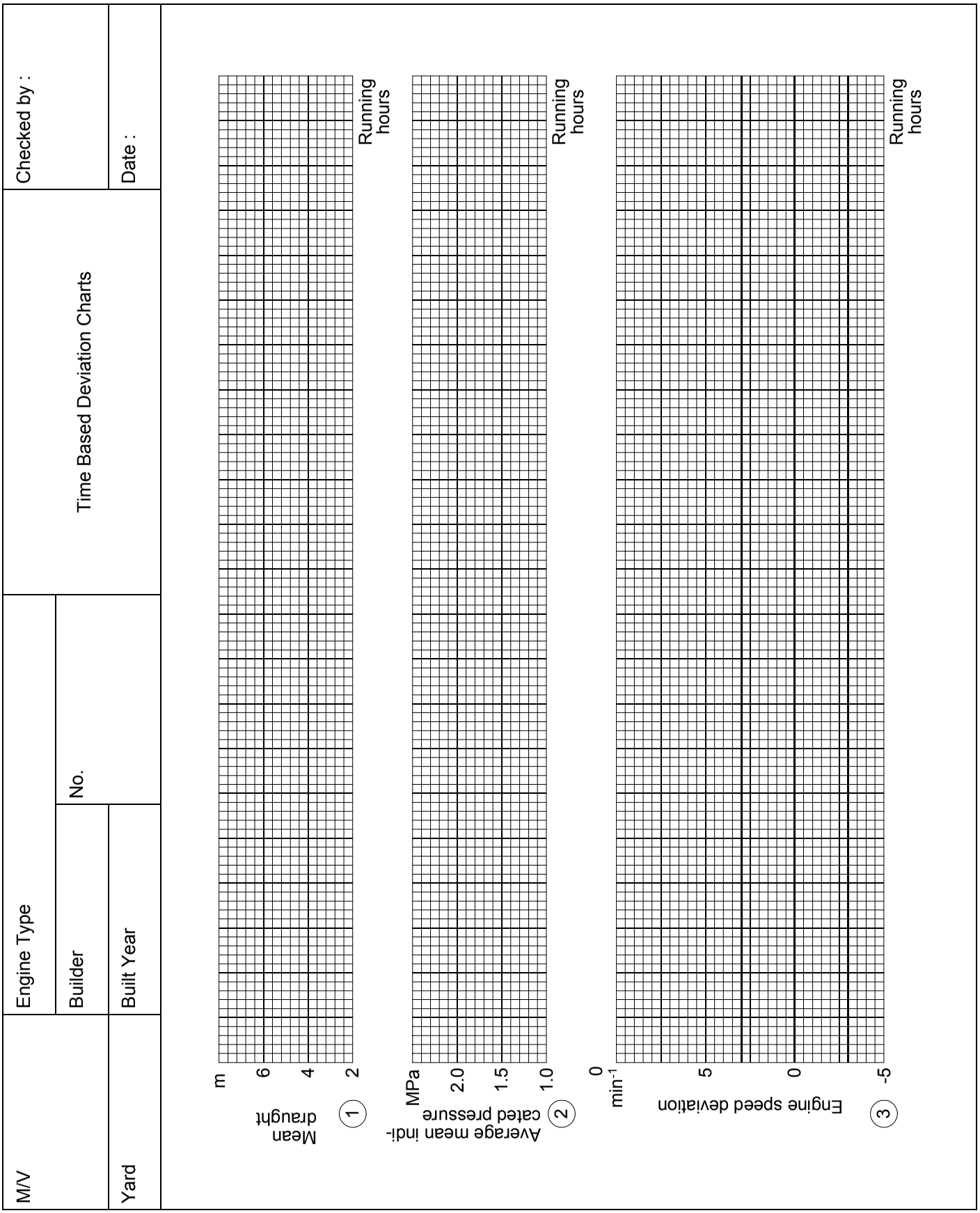

Plate 70606 Synopsis Diagram – for Engine

Model curves and time based deviation charts for :
pmax and fuel pump index as a function of pi

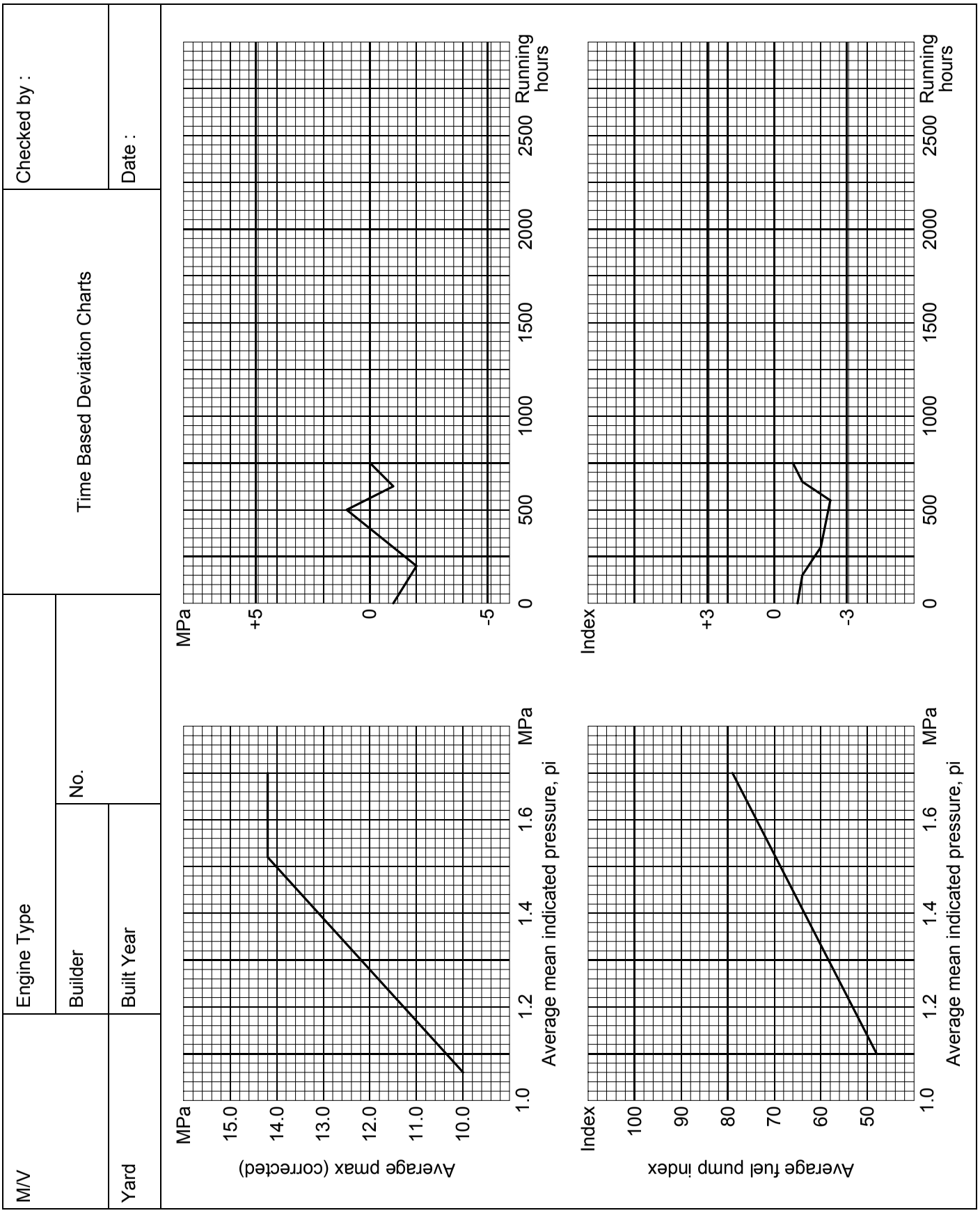

Plate 70606 **Synopsis Diagram – for Engine**
(Blank Copy)

Time based deviation charts for :
pmax and fuel pump index

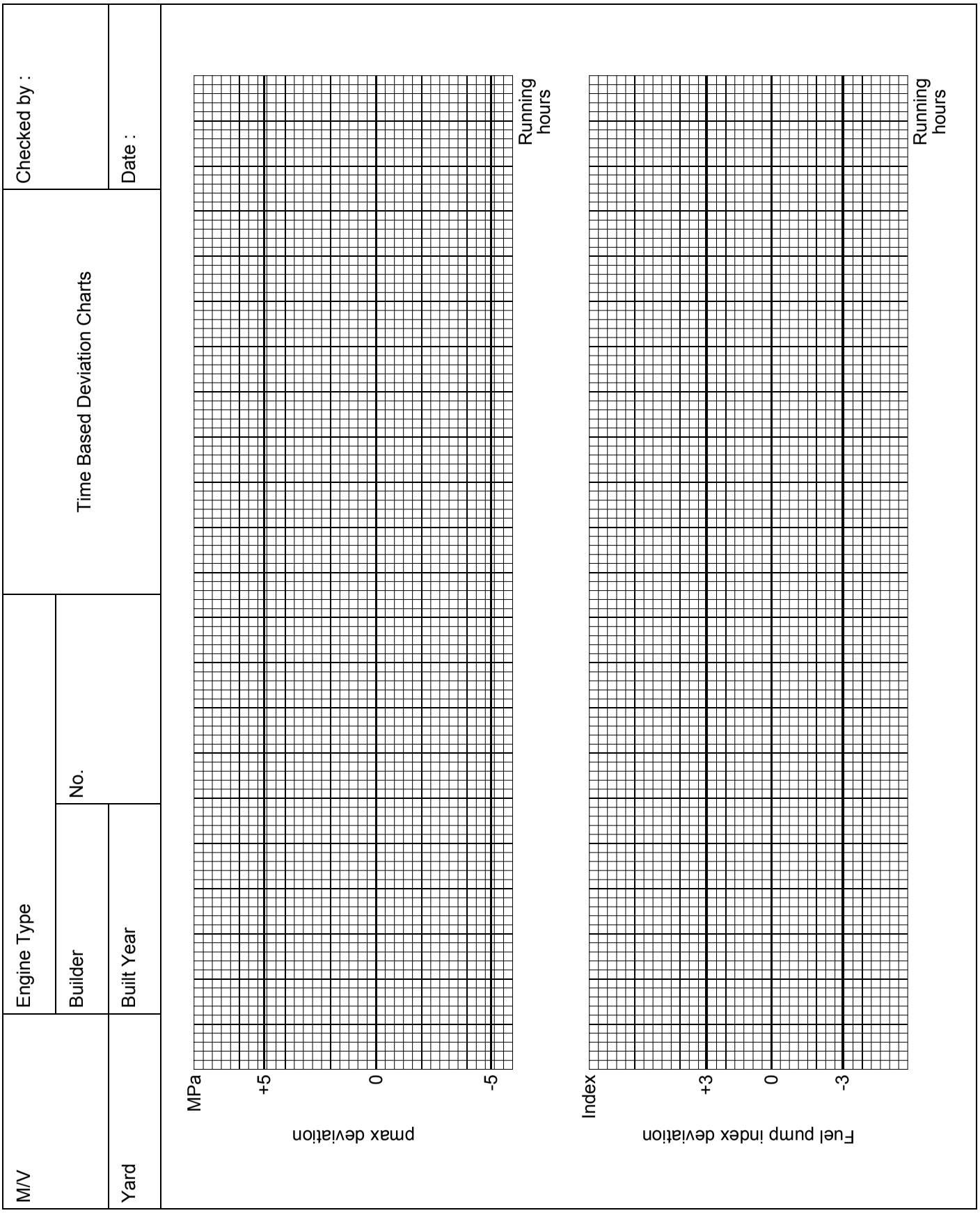

Plate 70607 Synopsis Diagram – for Engine

Model curves and time based deviation charts for :
texhv and pcomp as a function of pe

M/V	Engine Type		Time Based Deviation Charts	Checked by :
	Builder	No.		
Yard	Built Year			Date :

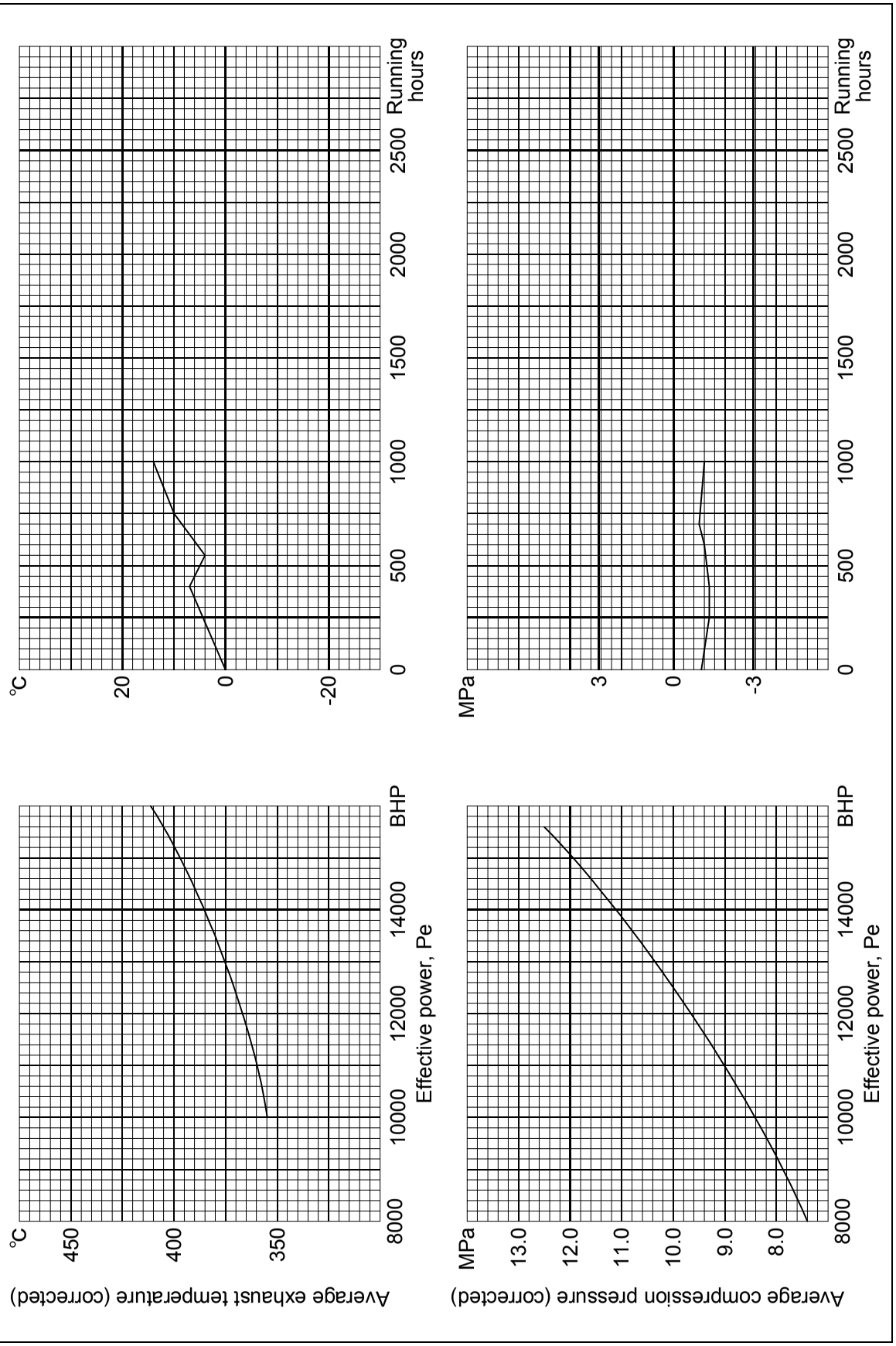

Plate 70607 Synopsis Diagram – for Engine
(Blank Copy)

Time based deviation charts for :
texhv and pcomp

M/V	Engine Type		Time Based Deviation Charts	Checked by :
	Builder	No.		
Yard	Built Year			Date :

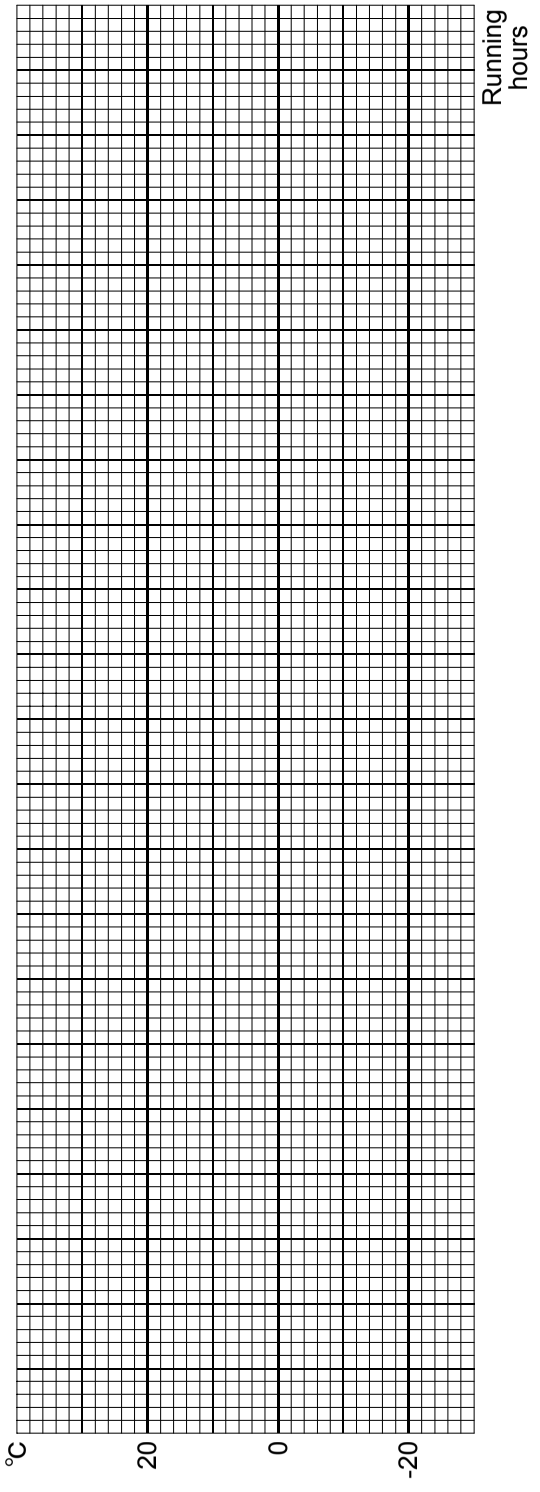

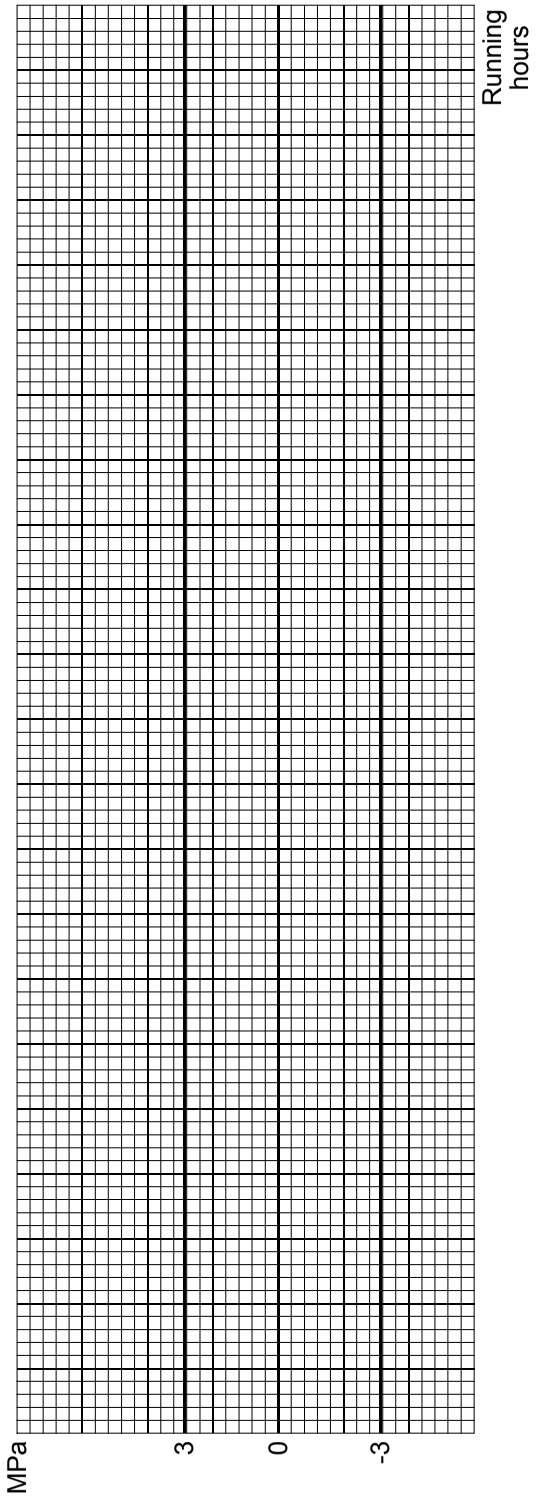

Plate 70608 Synopsis Diagram – for Turbocharger

Model curves and time based deviation charts for :
pscav as a function of pe
T/C speed and ∆pf as a function of pscav

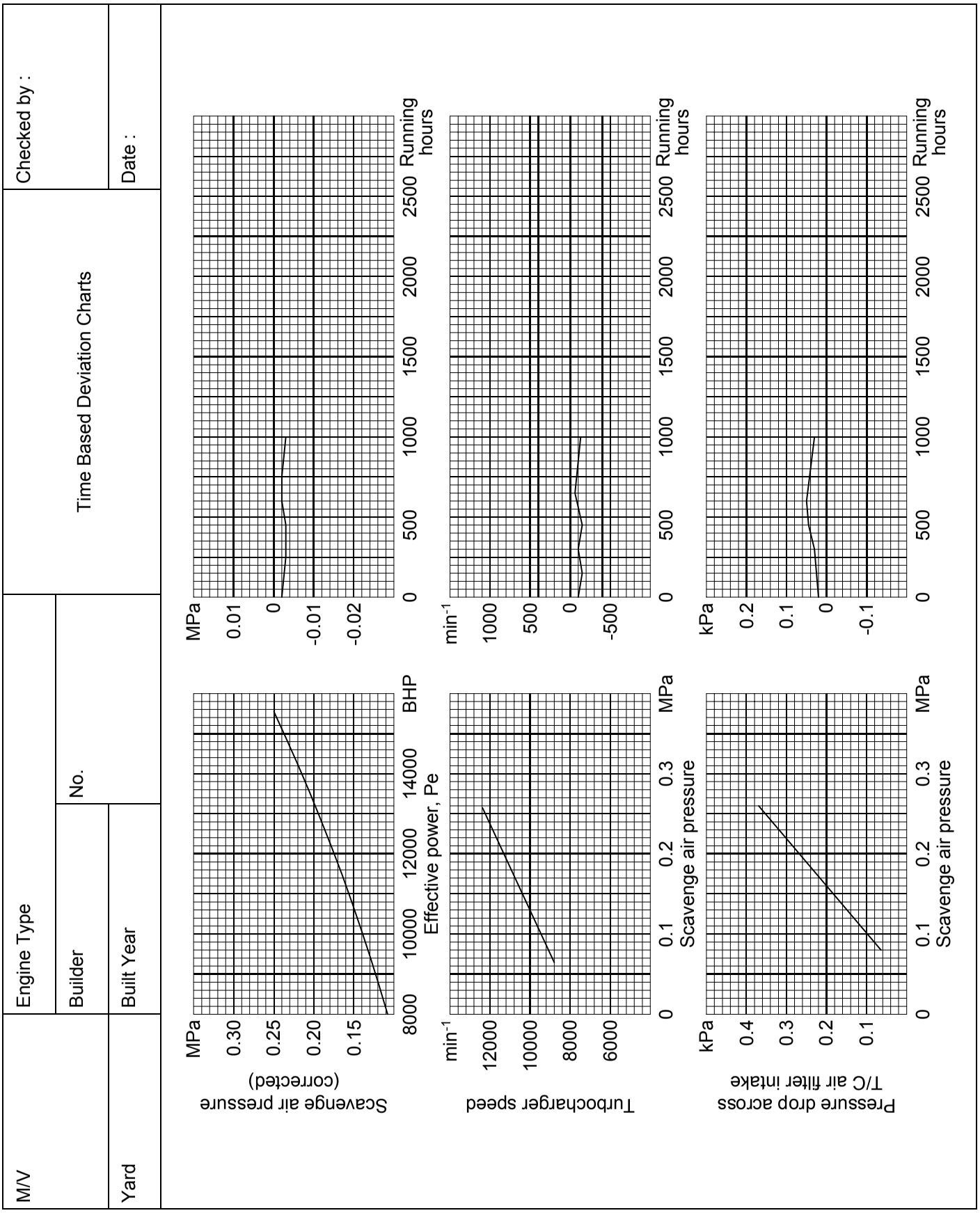

Plate 70608 Synopsis Diagram – for Turbocharger
(Blank Copy)

Time based deviation charts for :
pscav, T/C speed, and ∆pf

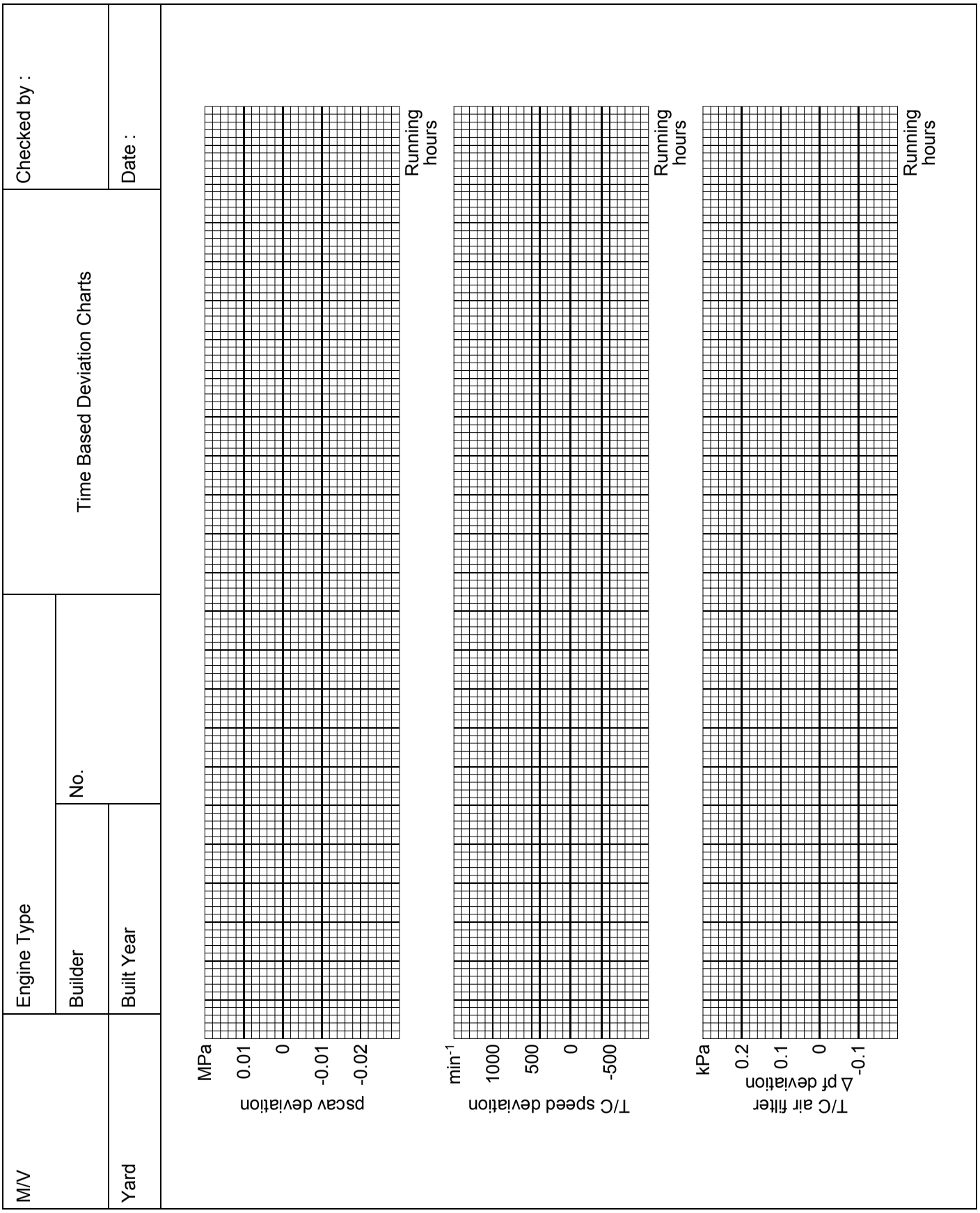

Plate 70609 Synopsis Diagram – for Turbocharger

Model curves and time based deviation charts for :
compressor and turbine efficiencies as a function of pscav

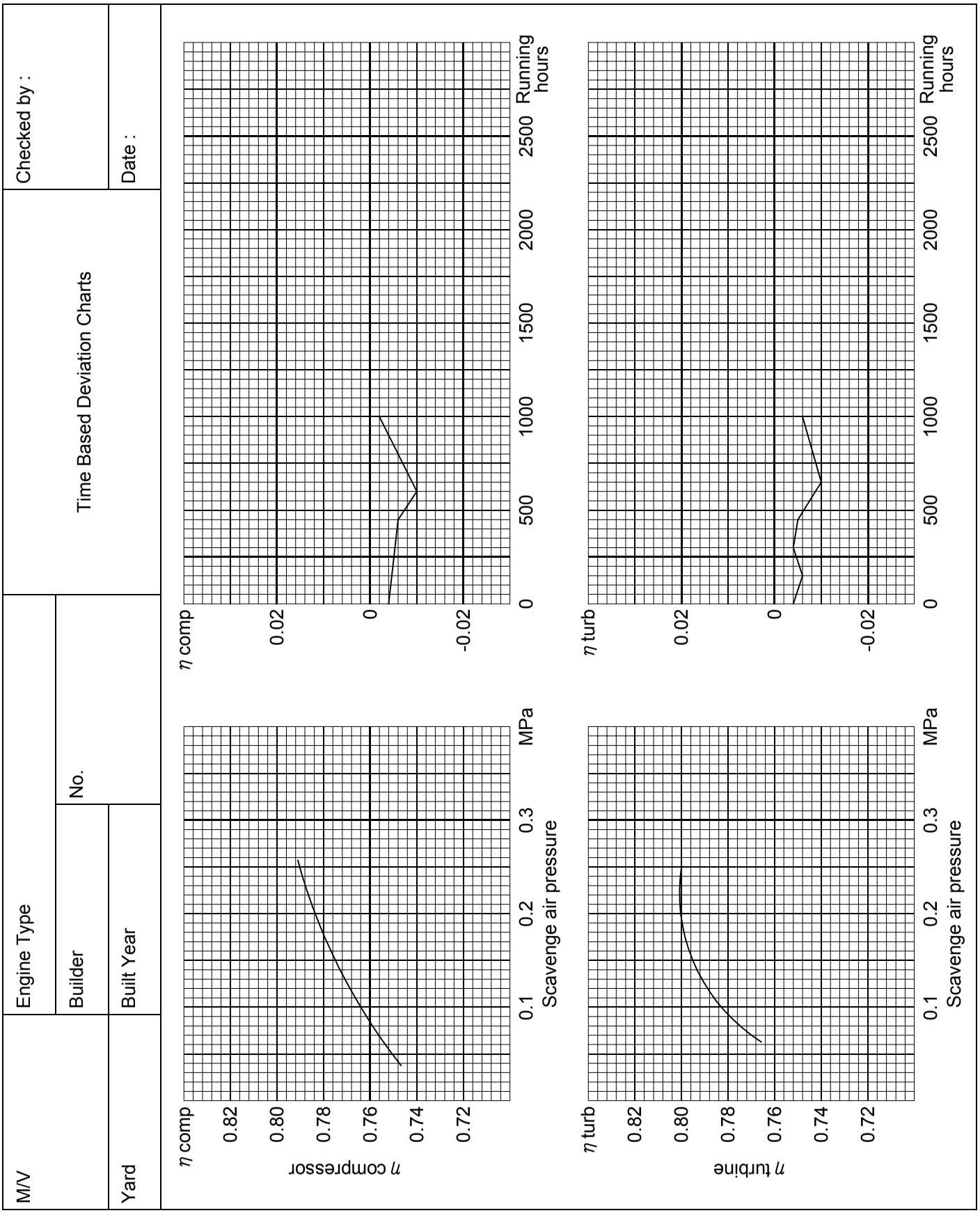

Plate 70609 **Synopsis Diagram – for Turbocharger**
(Blank Copy)

Time based deviation charts for :
compressor and turbine efficiencies

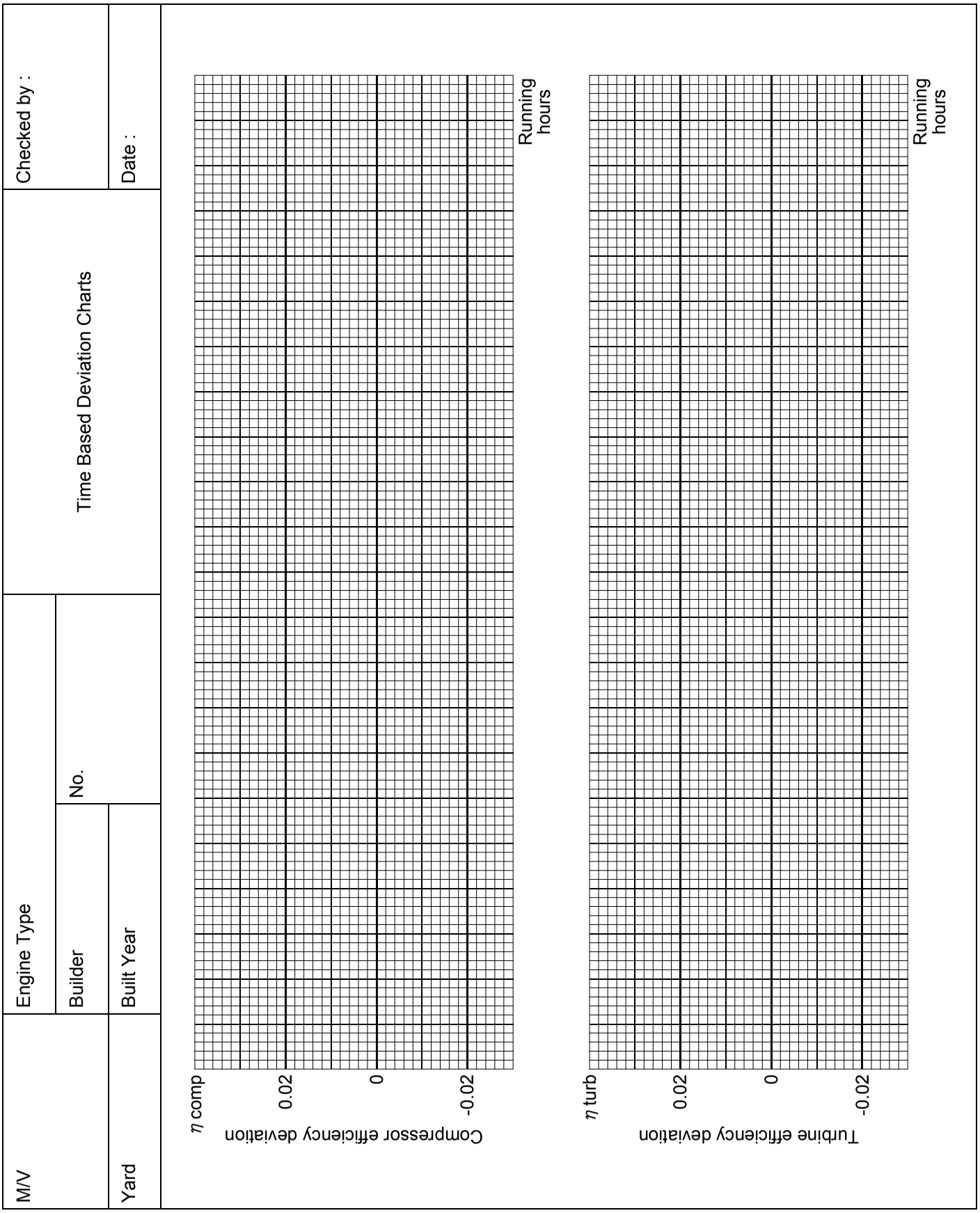

Plate 70610 Synopsis Diagram – for Air Cooler

Model curves and time based deviation charts for :
Δtair-water, Δtwater, and Δpair as a function of pscav

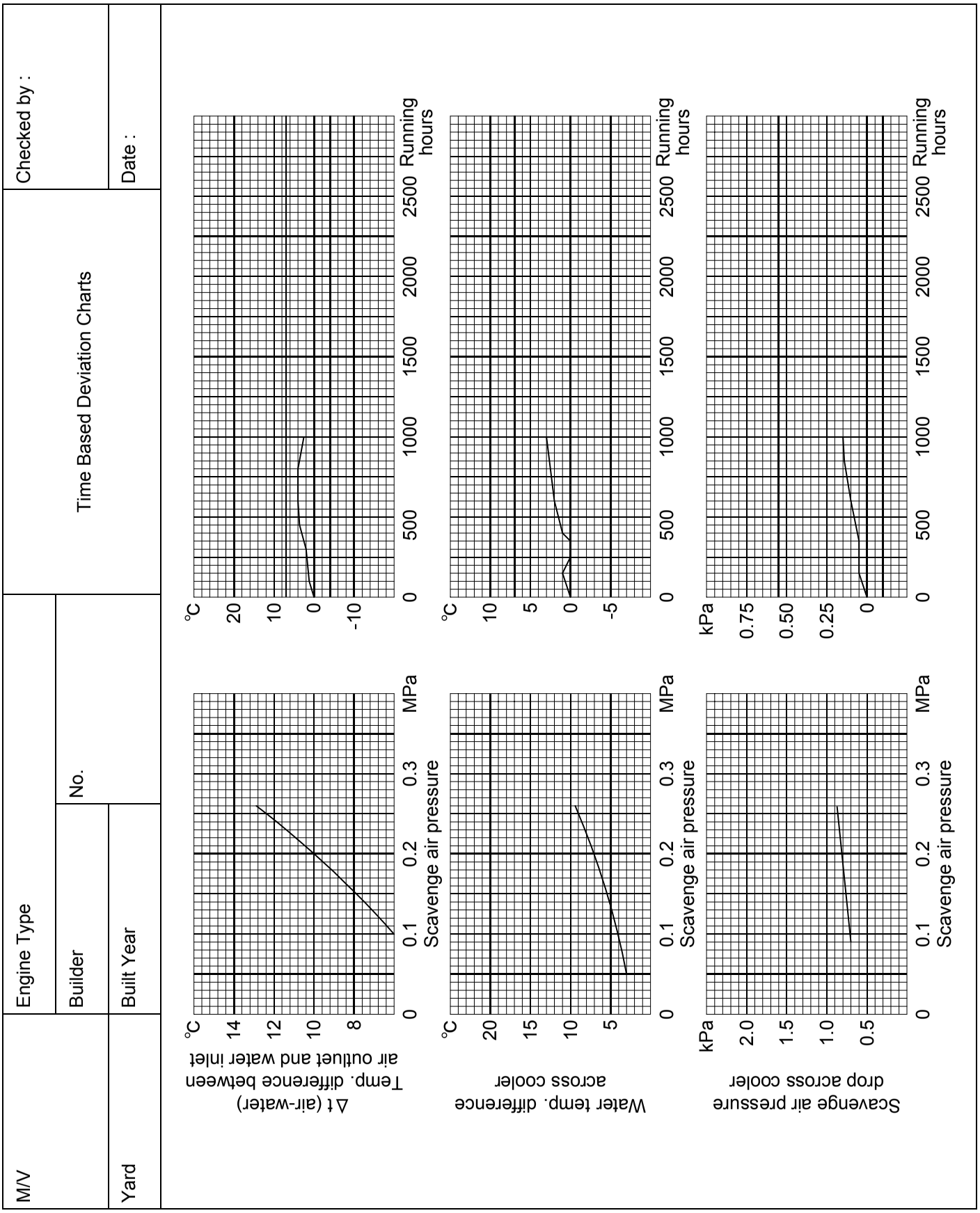

Plate 70610 **Synopsis Diagram – for Air Cooler**
(Blank Copy)

Time based deviation charts for :
Δtair-water, Δtwater, and Δpair

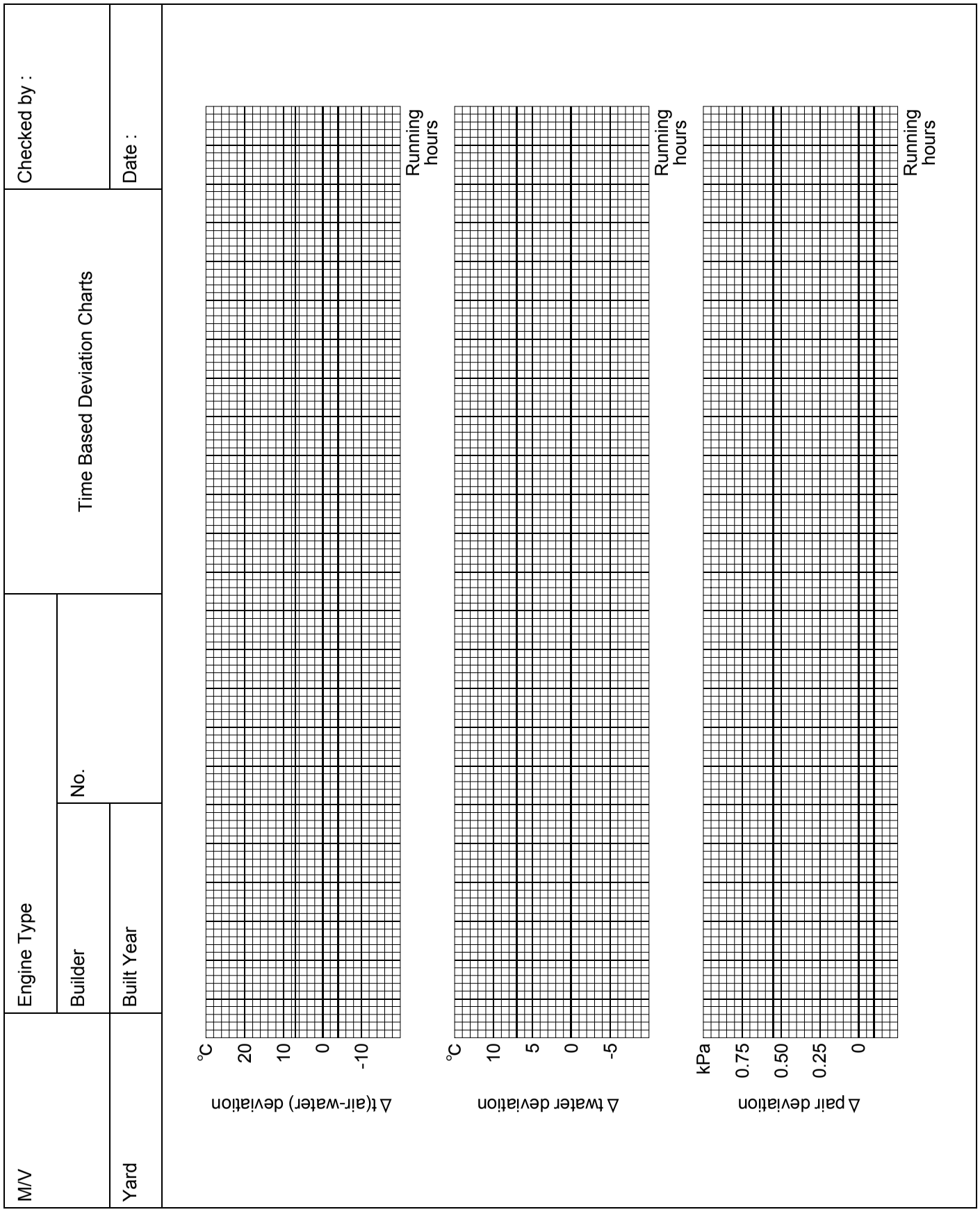

Plate 70611 Specific Fuel Oil Consumption

Correction for Fuel Temperature (Density) and Sulphur Content (Calorific Value)

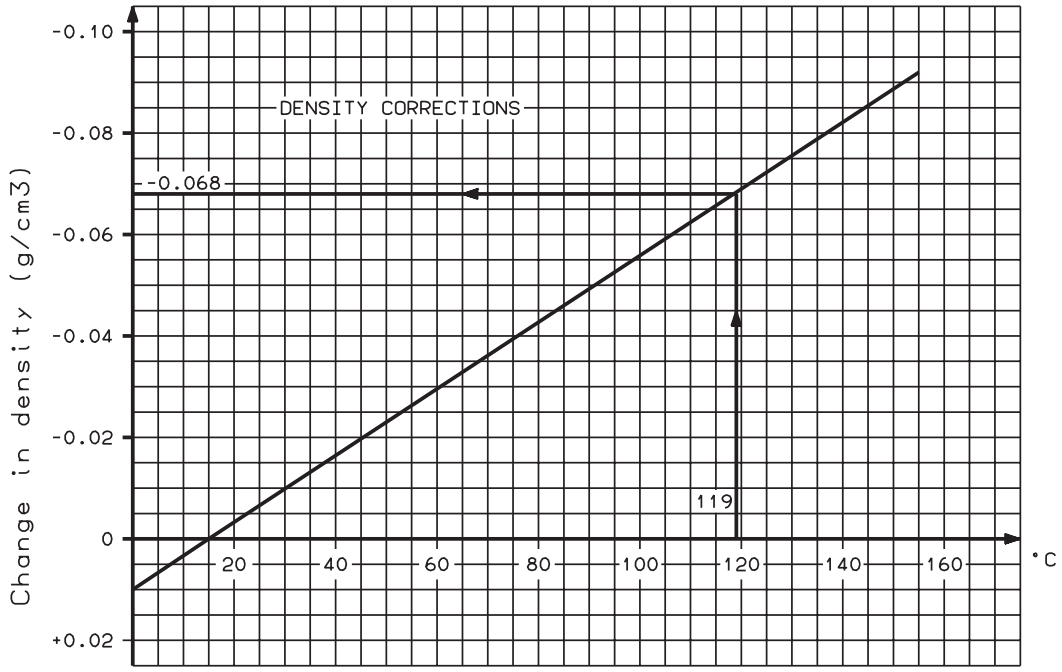

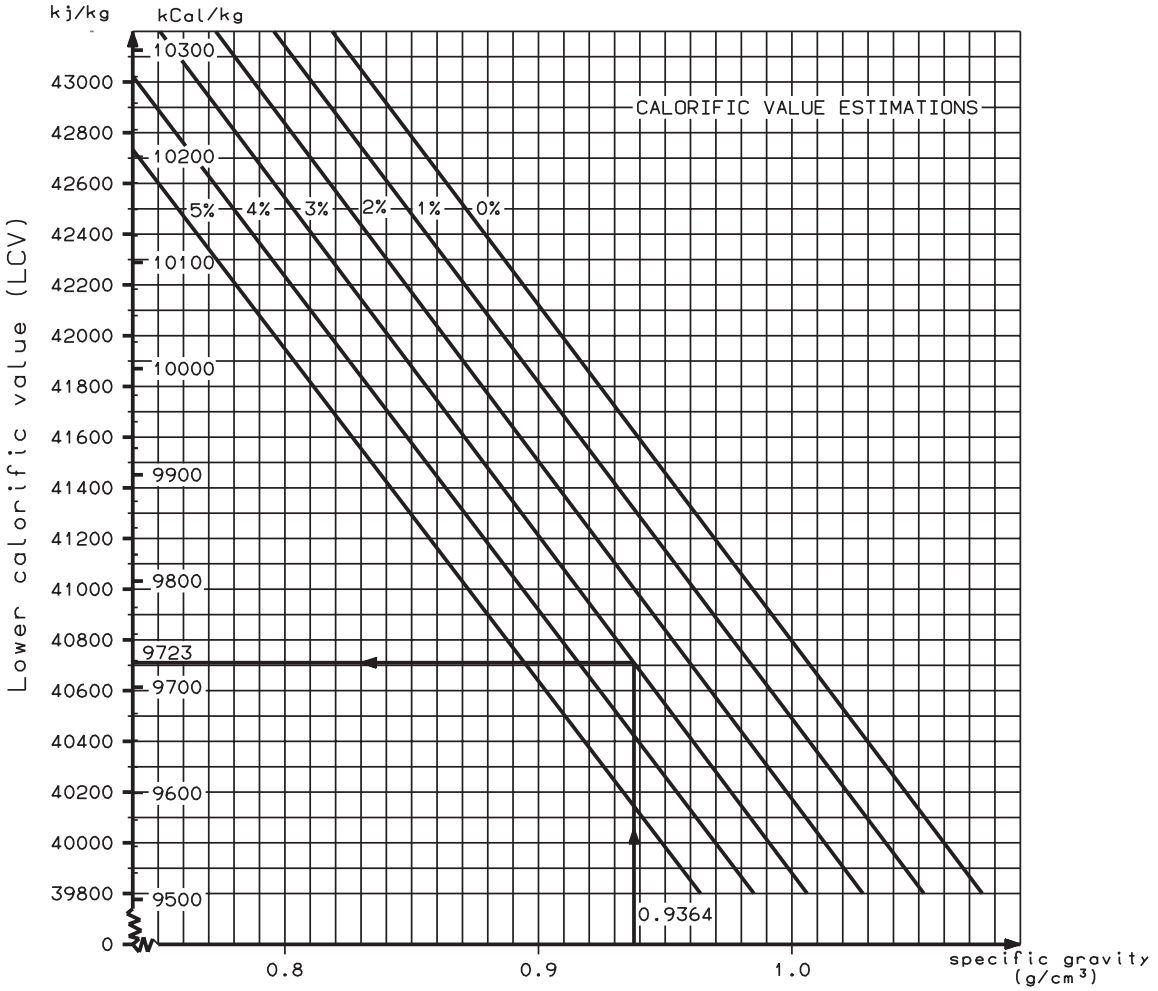

Plate 70614 Air Cooler Cleaning System

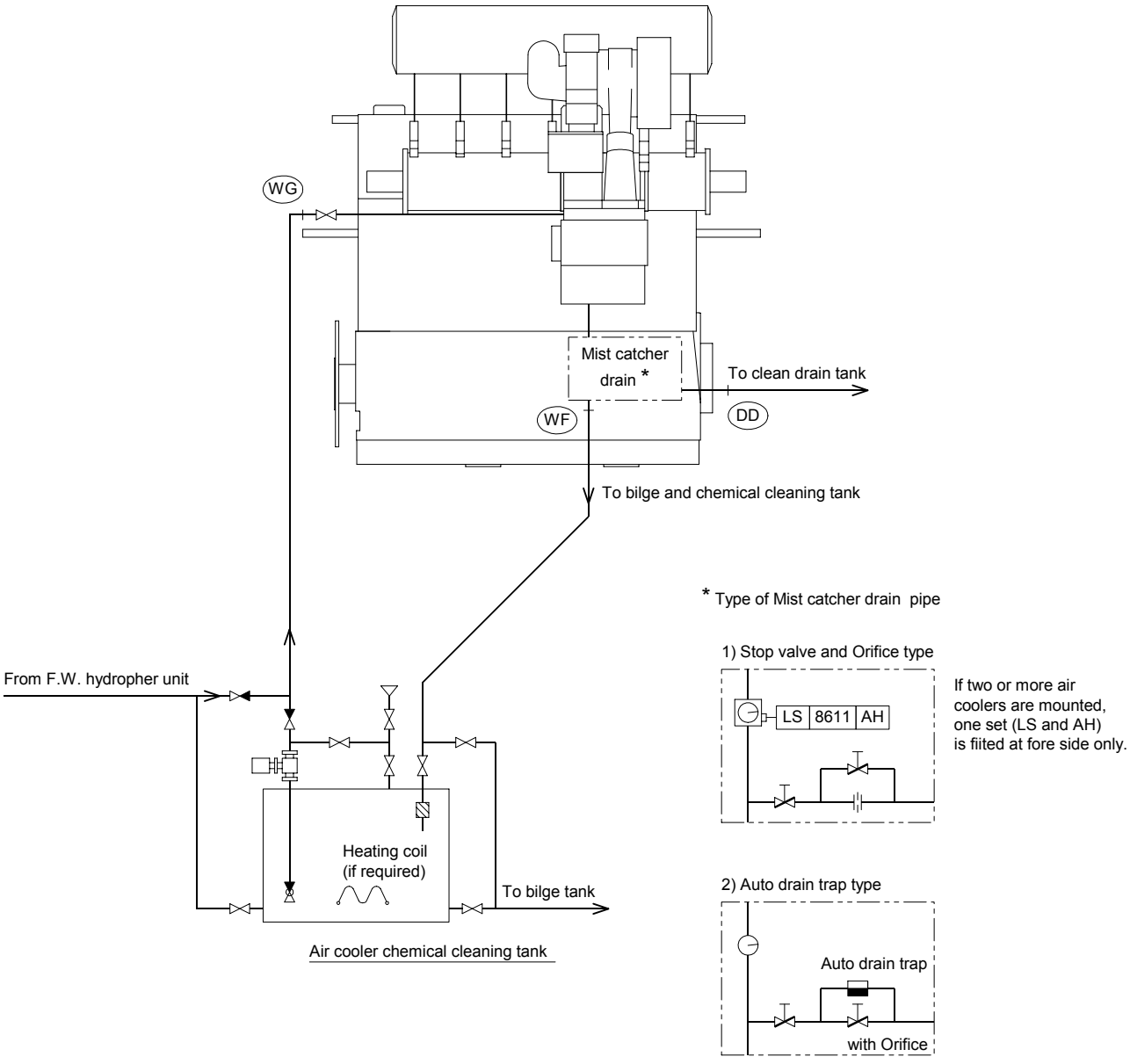

Plate 70615 Normal Indicator Diagram

K-MC/MC-C, L-MC/MC-C Engines :

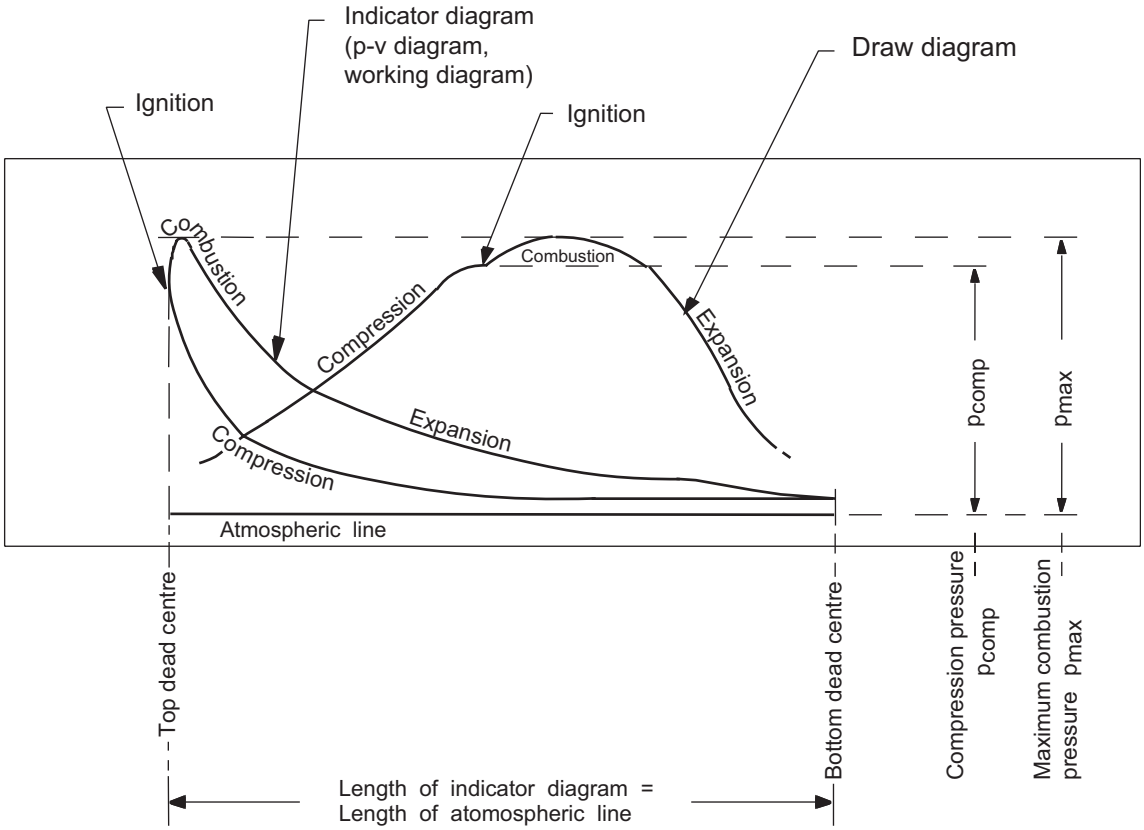

S-MC/MC-C Engines :

For this type of engine it has been necessary to delay the point of ignition to 2~3° after TDC, in order to keep the pressure rise, pcomp - pmax, within the specified 3.5 MPa, while still maintaining optimum combustion and thereby low SFOC.

Due to this delay in ignition, the draw diagram will often show tow pressure peaks, as shown in the figure below.

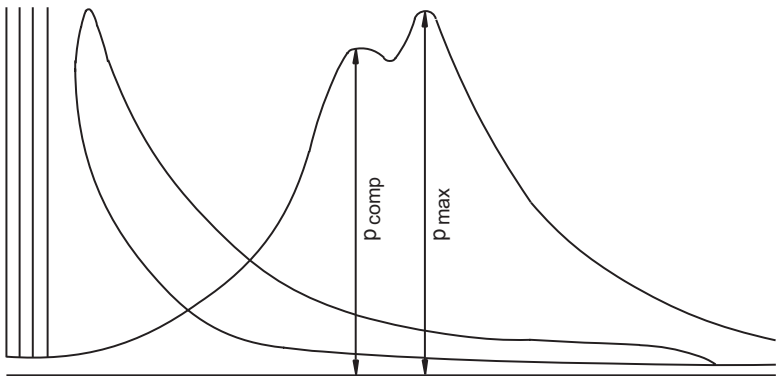

Plate 70616 Adjustment of Indicator Drive

Correctly adjusted indicator drive/cam

The compression and expansion lines coincide, no area visible between the curves.
(Fig. 1)

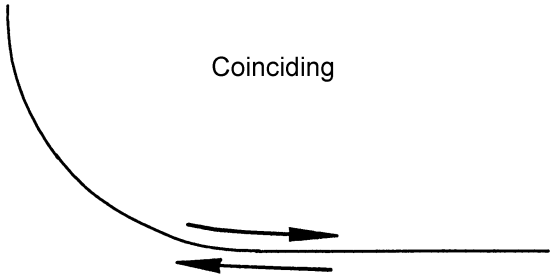

Fig. 1

Incorrectly adjusted indicator drive/cam

The compression and expansion lines do not coincide - an are is visible between the curves.
(Fig. 2)

The compression line is normally thicker than the expansion line.

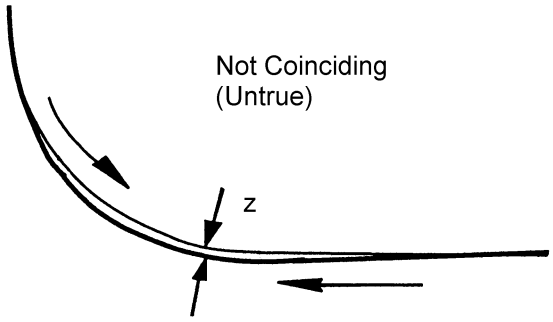

Fig. 2

Case A :
The expansion line above the compression line, as shown.
The discrepancy ‘Z’ is positive : Displace the indicator drive or turn the cam “back”. (Fig. 3)

Case B :
The expansion line below the compression line.
‘Z’ is negative : Displace the indicator drive or turn the cam “forward”. (Fig. 3)

(For z = 1 mm, turn the cam 2 mm or displace the drive approximately 2.5 mm, when using an indicator spring of 5 or 6 mm/MPa.)

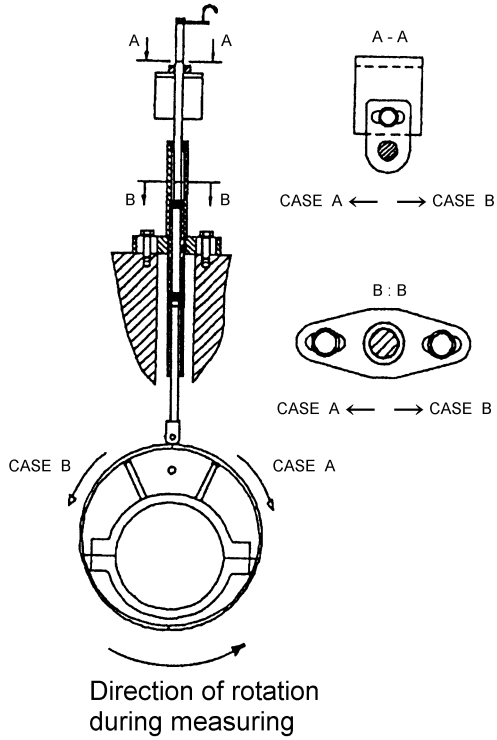

Fig. 3

Plate 70617 Faulty Indicator Diagram

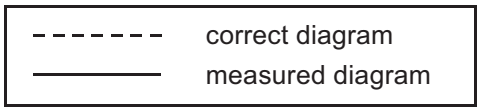

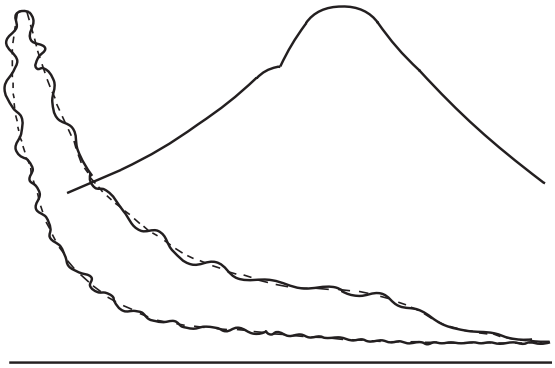

Fig. 1 Vibrations in drive.
Draw-diagram not affected.

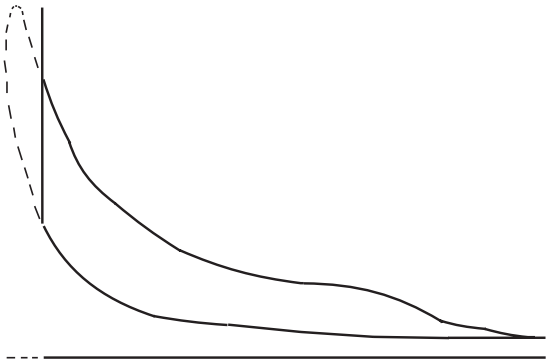

Fig. 2 Length of cord too long.
T.D.C.-part missing.

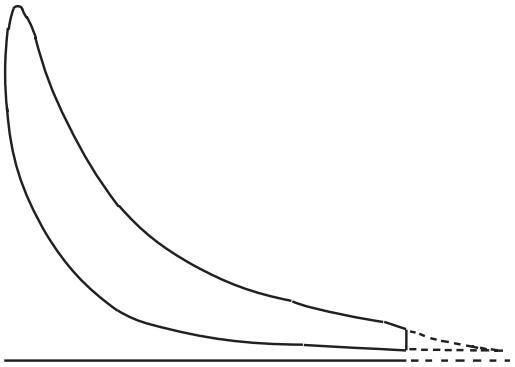

Fig. 3 Length of cord too short.
B.D.C.-part missing.

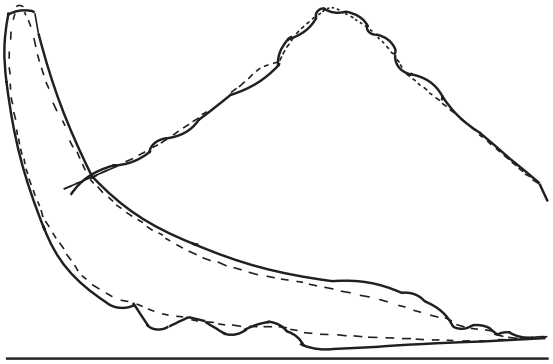

Fig. 4 Friction in indicator piston.
Draw-diagram also affected. This fault gives a too large working diagram area.

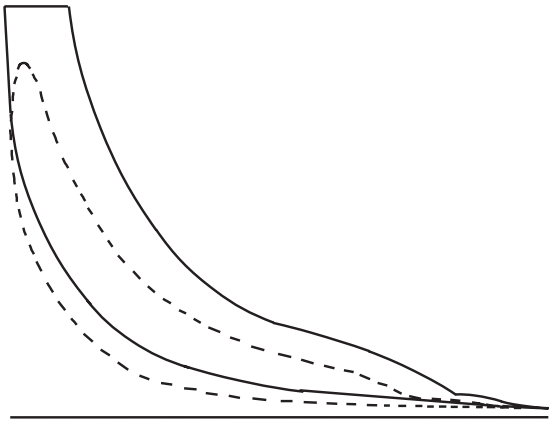

Fig. 5 Spring too weak.
Indicator piston strikes top end of cylinder.

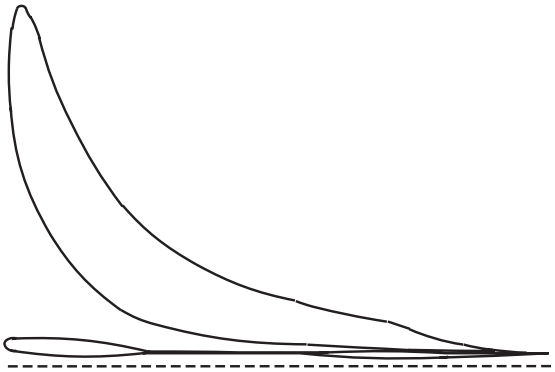

Fig. 6 Indicator cock leaking.
Atomospheric line untrue.

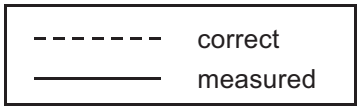

Fig. 1 :
Fuel injection too late.

- Fuel pressure too low.
- Defective fuel valve(s).
- Defective fuel pump suction valve or shock absorber.
- VIT index wrong, if equipped.
- Exceptionally poor fuel. (bad ignition properties)
- Fuel pump lead too little.

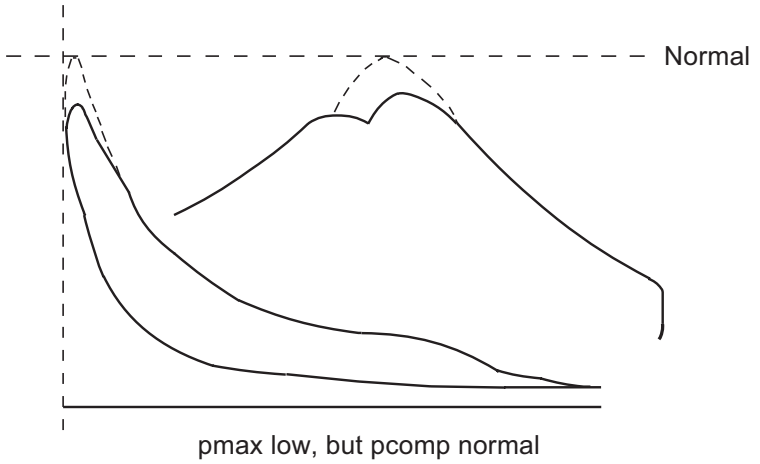

pmax low, but pcomp normal

Fig. 2 :
Fuel injection too early.

- VIT index wrong, if equipped.
- Fuel pump lead too large.

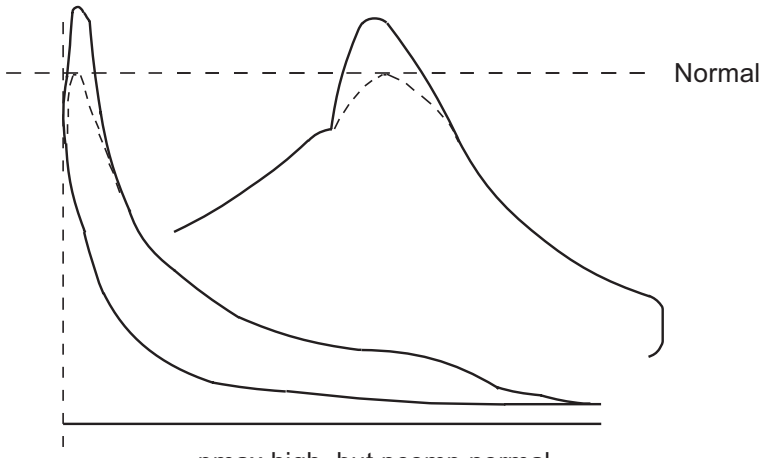

pmax high, but pcomp normal

Fig. 3 :
Leakages, increased cylinder volume, or fouling.

- Piston ring blow-by.
- Exhaust valve seat leakage.
- Piston crown burnt.
- Low scavenge pressure, fouling of exhaust and/or air system.
- Exhaust valve dumper missadjustment.

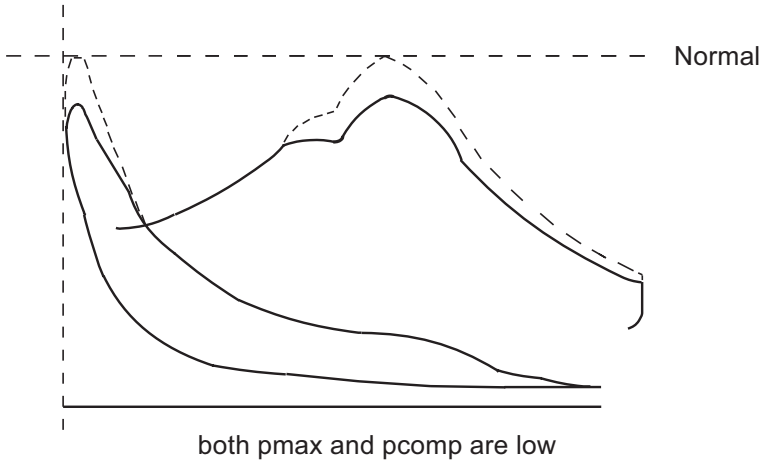

both pmax and pcomp are low

Plate 70619 Using the Planimeter

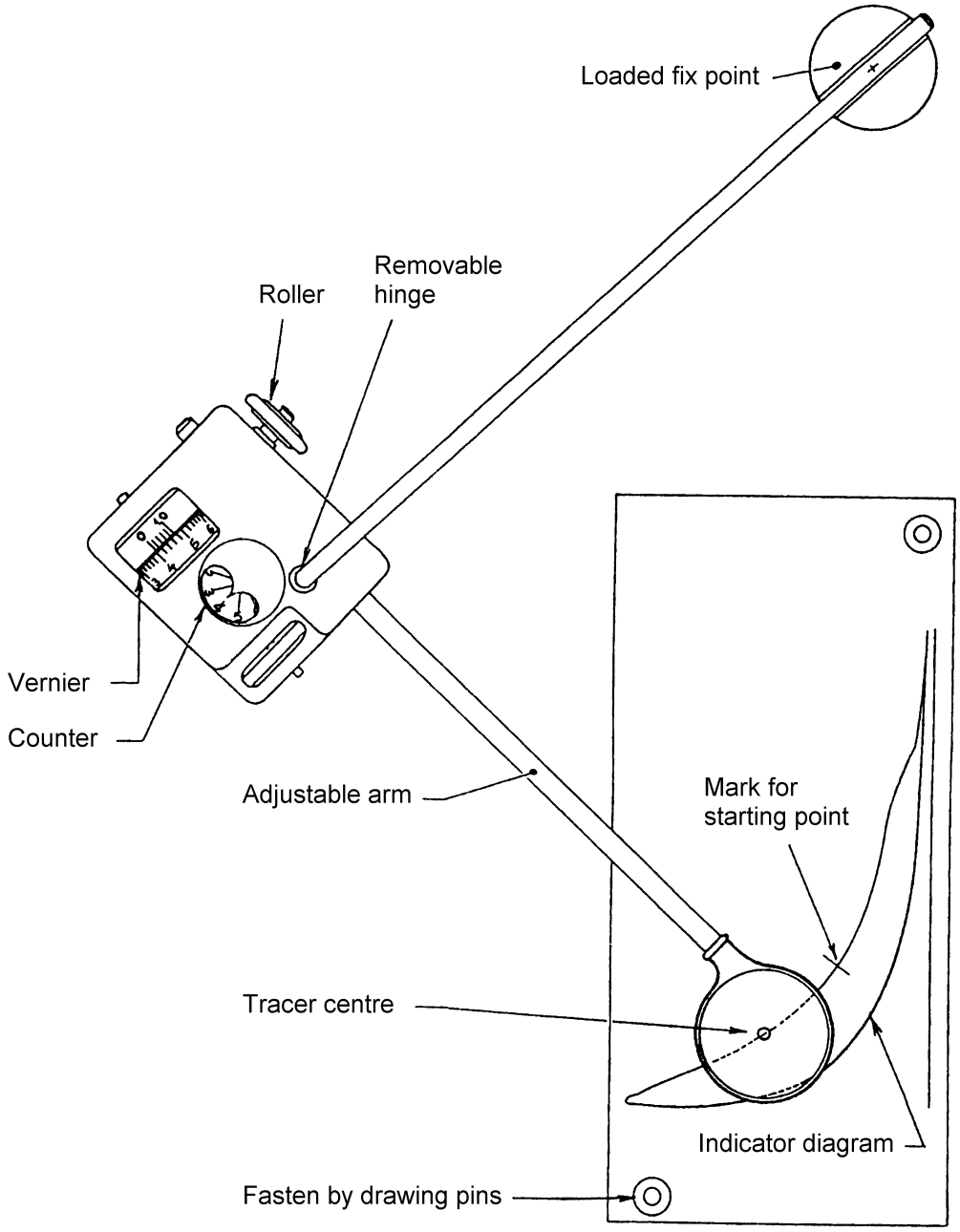

Planimetering:
Position the indicator as illustrated above.

Mark a starting point on the expansion line (to exactly localise the start/stop position of the diagram circumscription)

Begin tracing from the starting point, and circumscribe the diagram at even speed, and not too slowly.

Employ good illumination and, if necessary, use a magnifying glass for accurate reading of the vernier, before and after circumscription.

The difference in readings is proportional to the area of the indicator diagram.

Note: The calibration should be checked by measuring a known area, e.g. a precisely-drawn rectangle.

Plate 70620 Correction to ISO Reference Ambient Conditions

Maximum Combustion Pressure

Correction of measured pmax
because of deviations between tinl / tcoolinl and standard conditions.

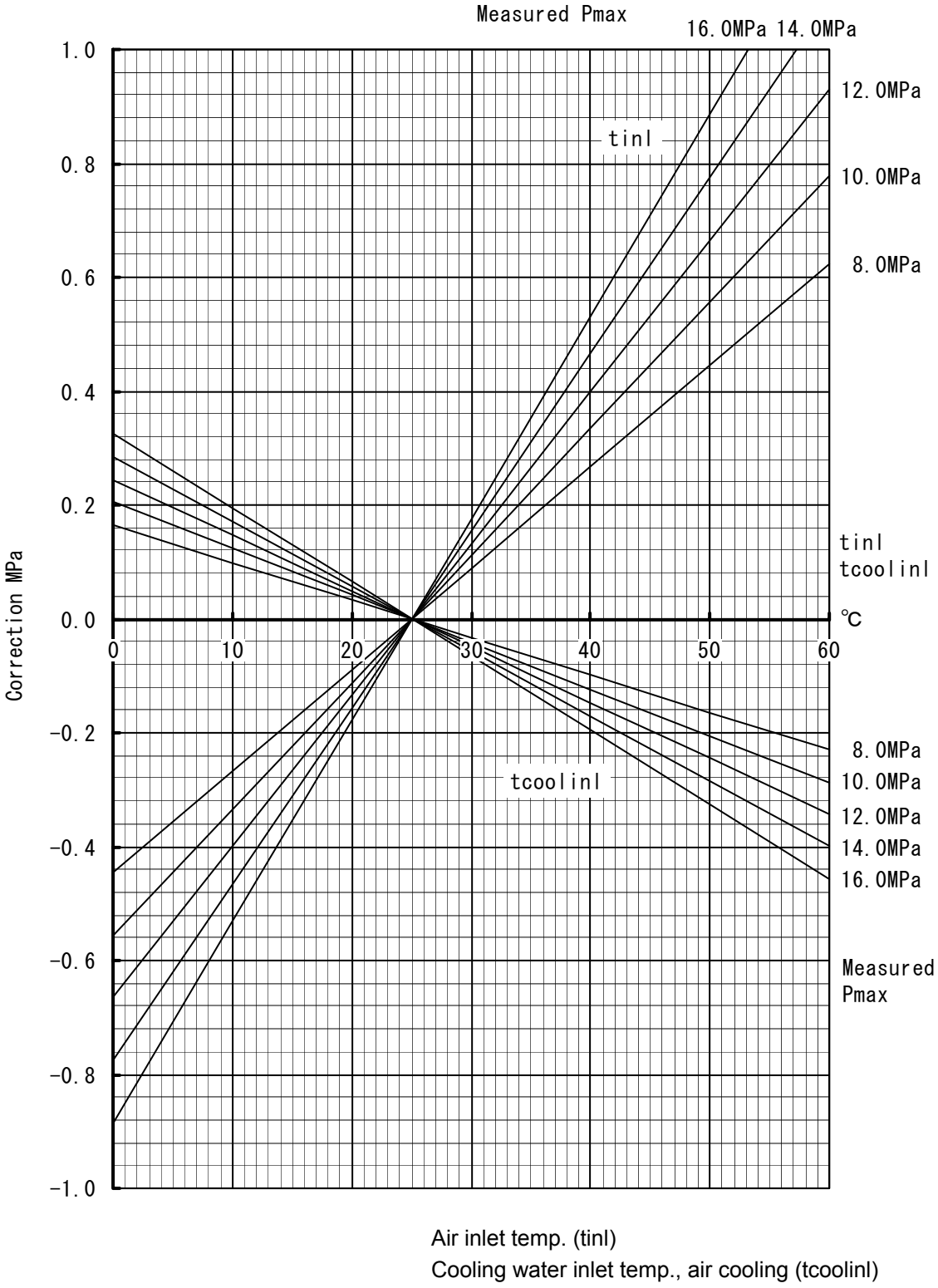

Calculating the corrections :

tinl : Acorr = (tmeas – 25) × $2.198 \times 10^{-3} \times (0.1 + Ameas)$ MPa
tcoolinl : Acorr = (tmeas – 25) × $-0.810 \times 10^{-3} \times (0.1 + Ameas)$ MPa

Plate 70621 Correction to ISO Reference Ambient Conditions

Exhaust Temperature (after exhaust valves)

Correction of measured exhaust temperature (texhv)
because of deviations between tinl / tcoolinl and standard conditions.

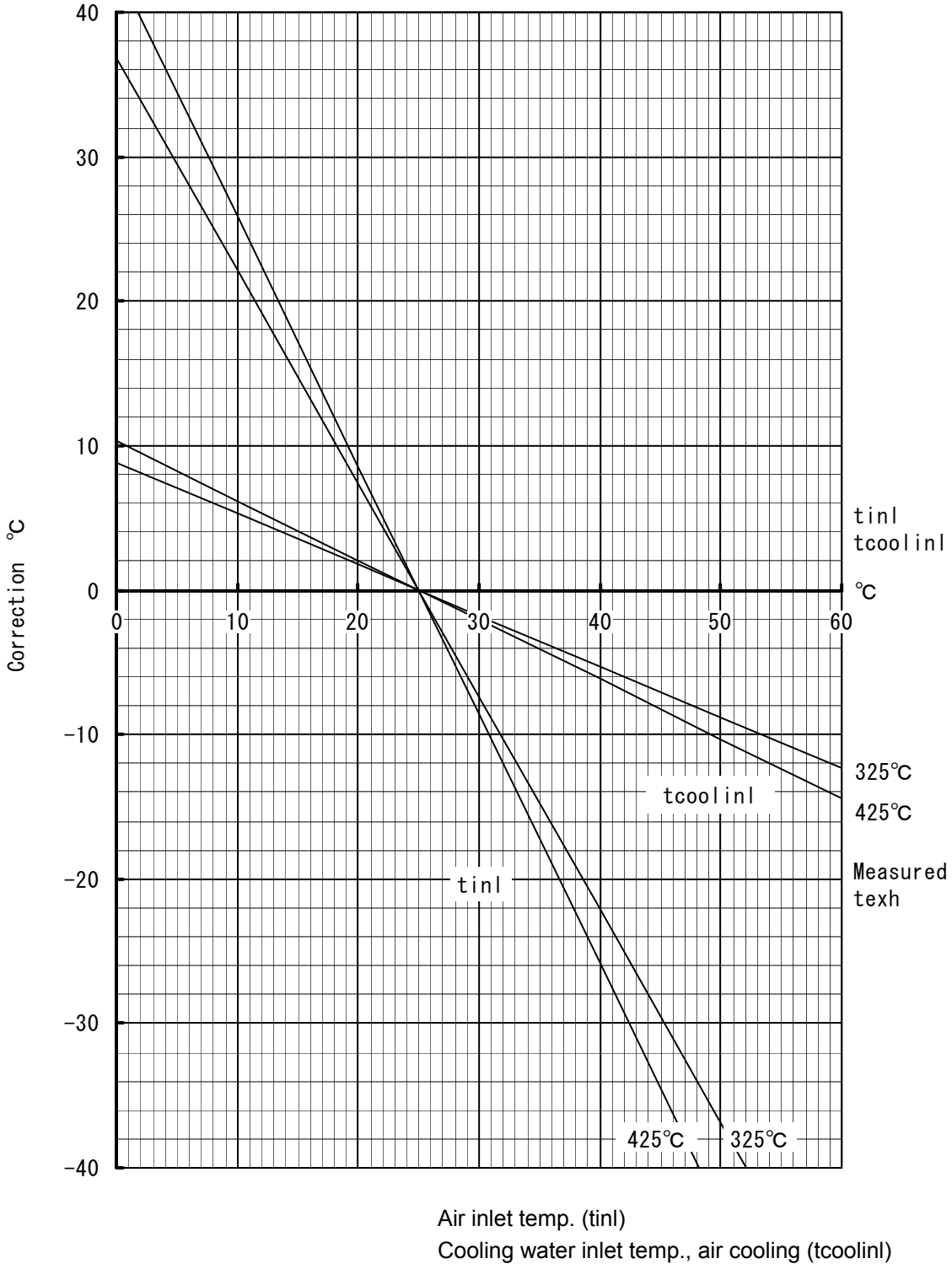

Calculating the corrections :

tinl : $A_{corr} = (t_{meas} - 25) \times -2.466 \times 10^{-3} \times (273 + A_{meas})$ °C

tcoolinl : $A_{corr} = (t_{meas} - 25) \times -0.590 \times 10^{-3} \times (273 + A_{meas})$ °C

Plate 70622 Correction to ISO Reference Ambient Conditions

Compression Pressure

Correction of measured compression pressure
because of deviations between tinl / tcoolinl and standard conditions.

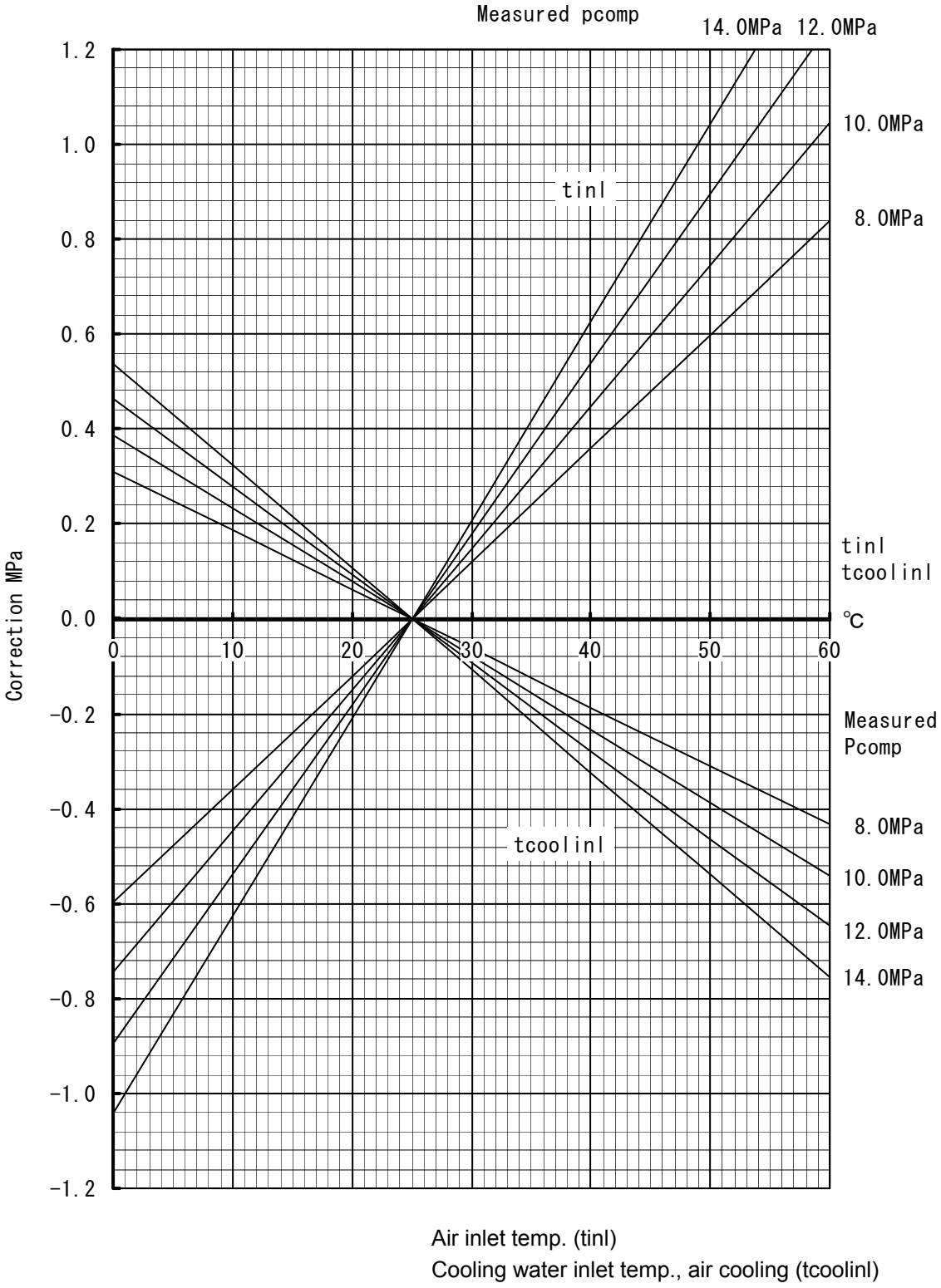

Calculating the corrections :

tinl : Acorr = (tmeas – 25) × $2.954 \times 10^{-3} \times (0.1 + Ameas)$ MPa
tcoolinl : Acorr = (tmeas – 25) × $-1.530 \times 10^{-3} \times (0.1 + Ameas)$ MPa

Plate 70623 Correction to ISO Reference Ambient Conditions

Scavenge Pressure

Correction of measured scavenge pressure
because of deviations between tinl / tcoolinl and standard conditions.

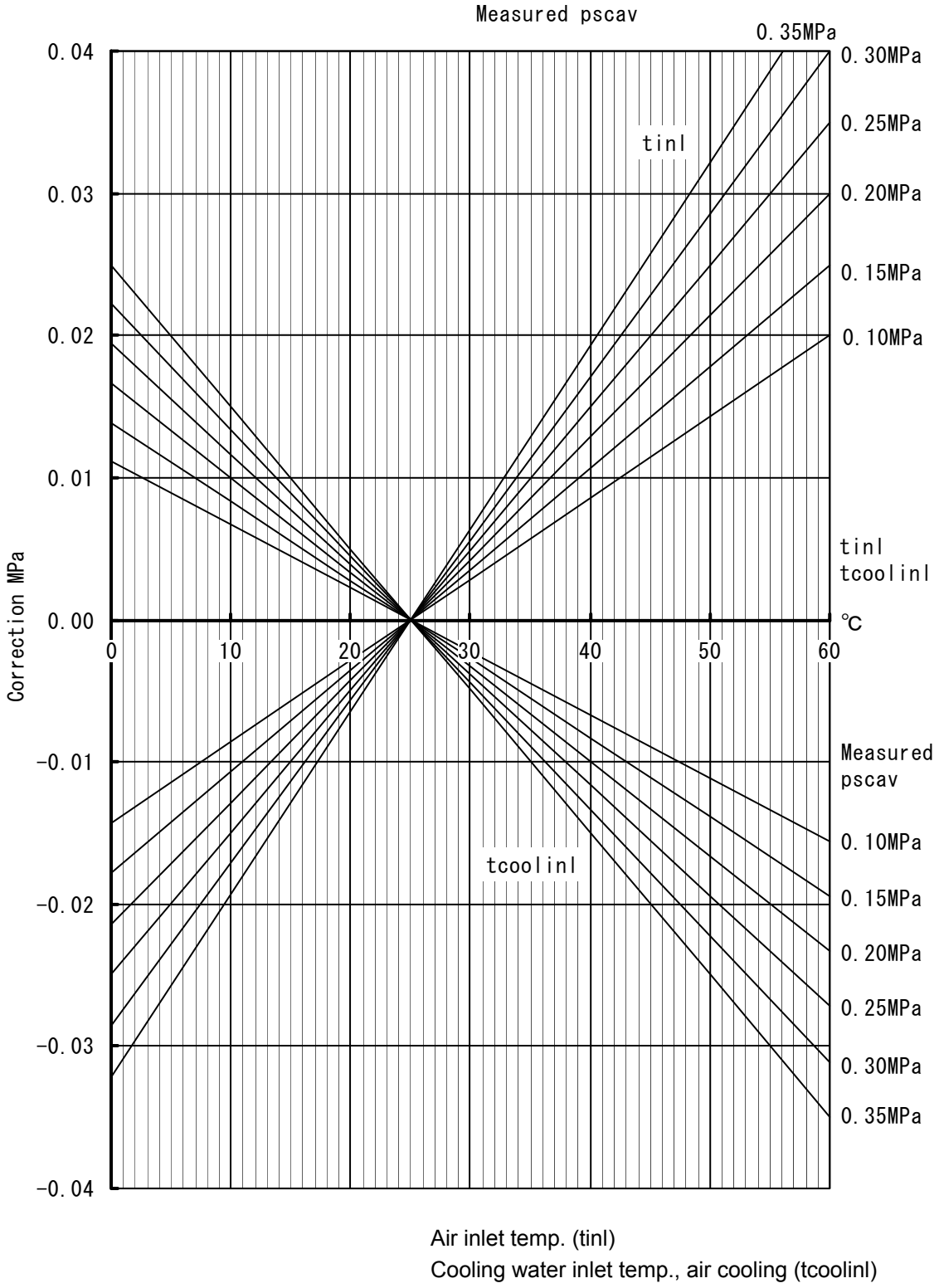

Calculating the corrections :

tinl : Acorr = (tmeas – 25) × $2.856 \times 10^{-3} \times (0.1 + Ameas)$ MPa
tcoolinl : Acorr = (tmeas – 25) × $-2.220 \times 10^{-3} \times (0.1 + Ameas)$ MPa

Plate 70624 Correction to ISO Reference Ambient Conditions

Example of readings	:	pmax	:	14.0 MPa	pscav	:	0.20 MPa
	:	texhv	:	425 °C	timl	:	42 °C
	:	pcomp	:	11.0 MPa	tcoolinl	:	40 °C

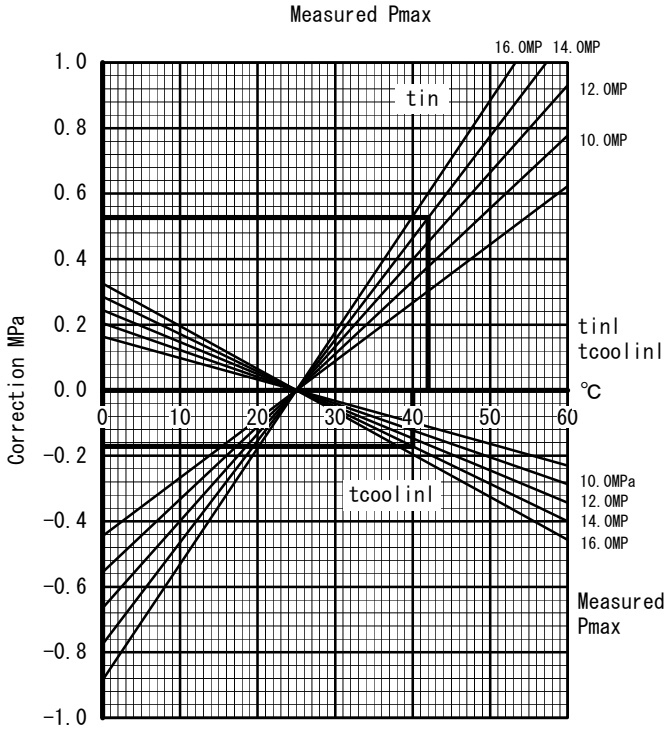

Correction for tinl : + 0.53 MPa
Correction for tcoolinl : – 0.17 MPa
Correction 0.53–0.17 : + 0.36 MPa

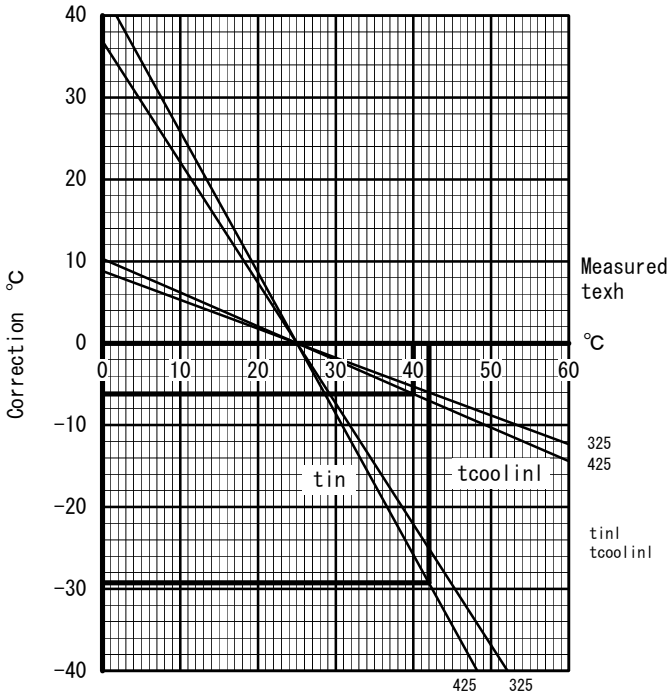

Correction for tinl : – 29 °C
Correction for tcoolinl : – 6 °C
Correction –29–6 : – 35 °C

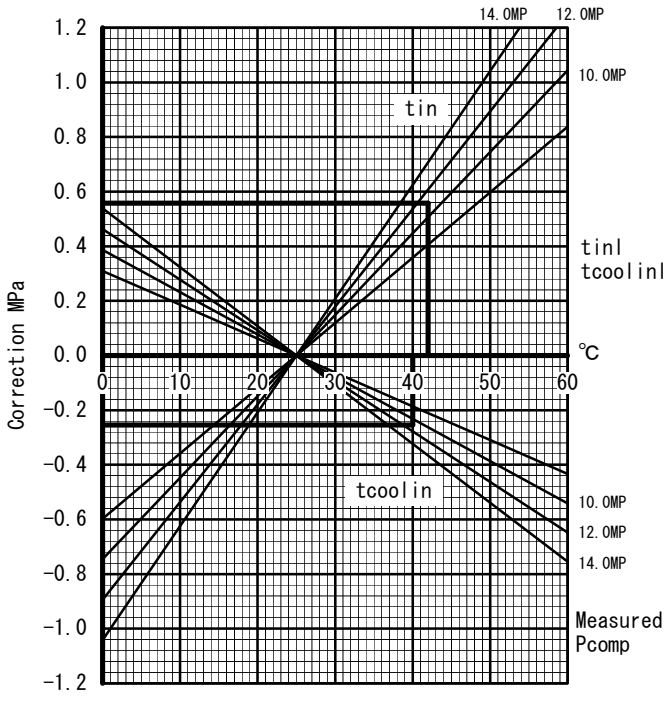

Correction for tinl : + 0.56 MPa
Correction for tcoolinl : – 0.25 MPa
Correction 0.56−0.25 : + 0.34 MPa

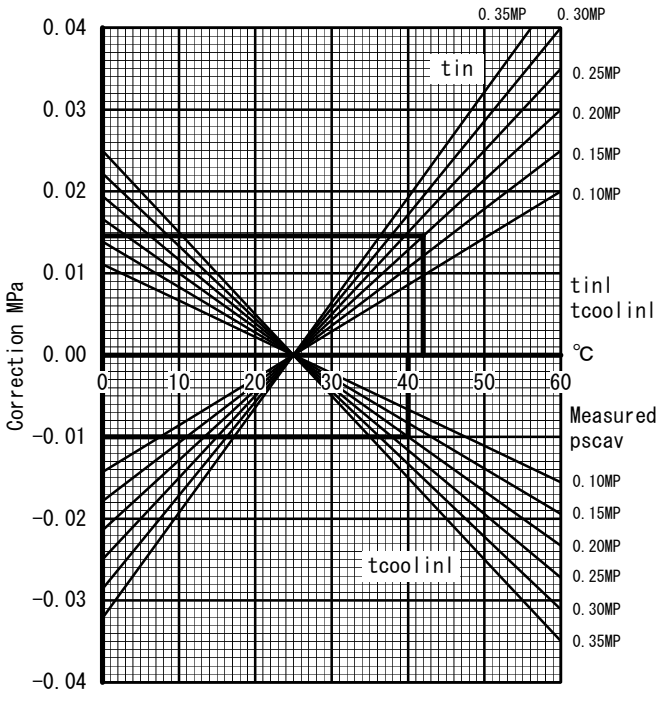

Correction for tinl : + 0.0145 MPa
Correction for tcoolinl : – 0.01 MPa
Correction 0.0145–0.01 : + 0.0045 MPa

Correction factor for fuel pump index K

K = K1 × K2 × gravity at 15 ℃

Example

Fuel oil characteristics

- Lower calorific value : 9700 kcal/kg
  (if not provided, it can be estimated from Sulphur content and gravity.)
- Specific gravity : 0.947 at 15 ℃
- Preheated temperature : 104 ℃

Ambient condition

- Room temperature : 30 ℃
- Scavenge air temperature : 32 ℃

K1 = 0.953, K2 = 0.926

Then

K = 0.953 × 0.926 × 0.947 = 0.836

Correction factor K1 for fuel oil quality and change of ambient condition

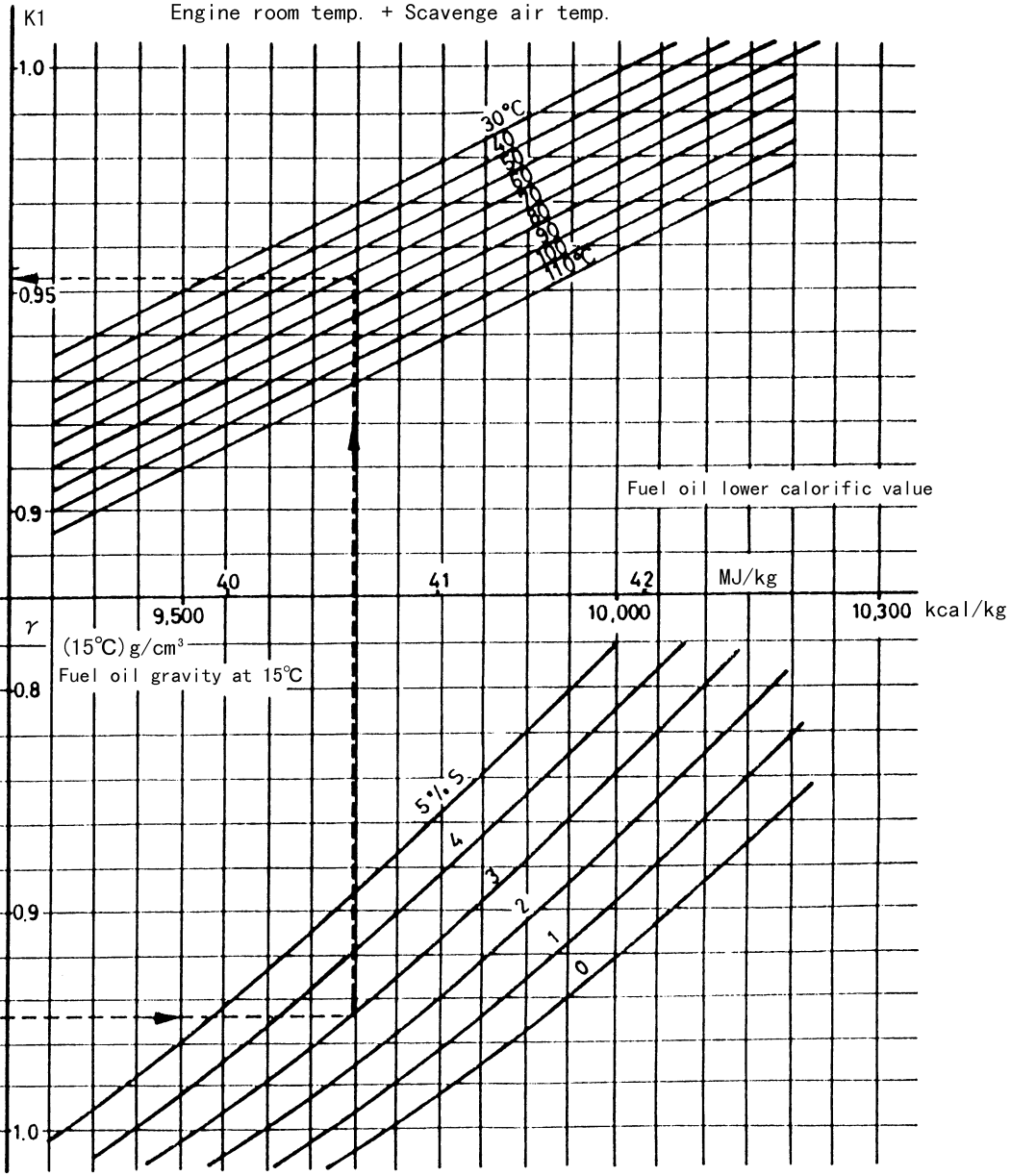

Correction factor K2 for fuel oil gravity and preheated condition

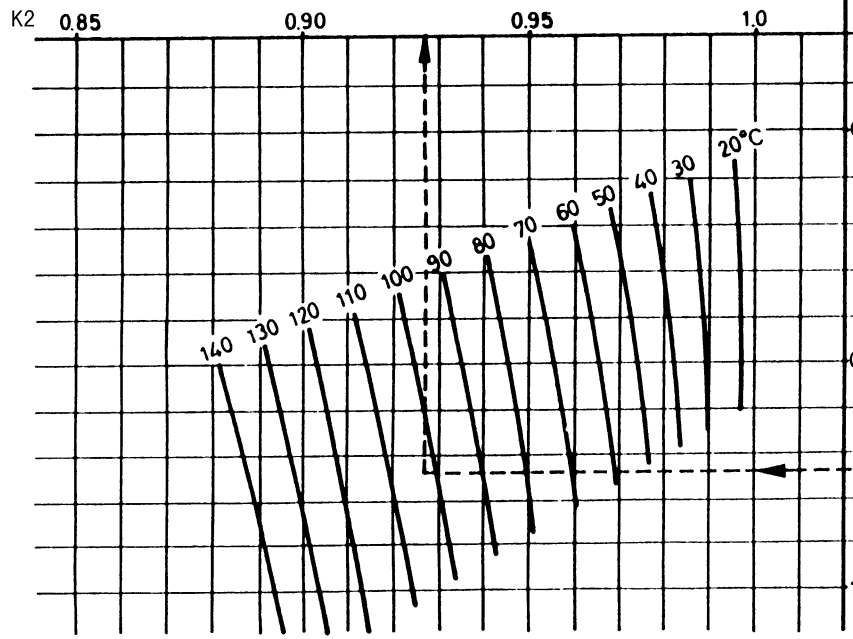

Fuel oil sulphur content

Plate 70628 Turbocharger Compressor Wheel Diameter and Slip Factor

Turbocharger Type	Diameter, D (m)	Slip Factor, μ
NA48/S	0.576 0.576 0.576	0.76 0.74 0.70
NA57/T9	0.684 0.684	0.70 0.74
NA70/T7	0.805	0.76
NA70/T9	0.840 0.840	0.76 0.74
TCA66	0.633	0.745
TCA77	0.752	0.745
TCA88	0.893	0.745

Turbocharger Type	Diameter, D (m)	Slip Factor, μ
VTR564	0.6588	0.77
TPL69-A10	0.3999	0.69
TPL73-B11	0.4879	
TPL73-B12	0.5065	
TPL77-B11	0.5799	
TPL77-B12	0.6020	
TPL80-B11	0.6729	
TPL80-B12	0.6985	
TPL85-B11	0.8239	
TPL85-B12	0.8553	

Turbocharger Type	Diameter, D (m)		Slip Factor, μ			
Impeller Profile	V, S or R		V		S or R	
Impeller Size	2	3	2	3	2	3
MET33SD, SE	0.352	0.373	0.72		0.69	
MET42SD, SE	0.436	0.462				
MET53SD, SE	0.553	0.586				
MET60MA	–	0.652				
MET66SD, SE	0.689	0.730				
MET71SE	–	0.790				
MET83SD, SE	0.873	0.924				
MET90SE	–	1.02				

DRAWN	H.Uezono	MITSUI-MAN B&W MC ENGINES TURBOCHARGER CLEANING WITH SOLID MATERIAL (MAN B&W - TCA Type)	No.	60	23
CHECKED			ME 4069B		
APPROVED					

Water washing of turbocharger at turbine side during engine running has been recommended on MITSUI-MAN B&W engines as the standard in order to maintain the best turbine performance.

On the other hand, however, the cleaning method with the solid material has been developed and recommended instead of water washing by several turbocharger marker.

In these circumstance, we install the cleaning device with solid material in addition to water wasting as the standard.

Cleaning method with solid material is shown in this sheet.

As for water cleaning, refer to ME4070.

三井造船株式会社　玉野事業所　ディーゼル設計部
MITSUI ENGINEERING AND SHIPBUILDING CO., LTD.
TAMANO WORKS
DIESEL ENGINE DESIGN DEPARTMENT

1. Outline of cleaning method with solid material

Solid material in tank are spouted into exhaust pipe before a turbocharger by compressed air and will remove deposit on nozzle vanes and turbine blades by their impact force.

This procedure can be executed at service load without reducing engine speed in most cases, while the engine load should be reduced drastically in case of the water washing.

2. Solid material

1) Formed activated carbon, grained activated carbon and crushed nut shells are suitable for solid material.

Rice and grain are not recommended as a dry cleaning material, as it may stick in the exhaust gas boiler.

2) The cleaning effect depends on shape, size, hardness and specific gravity of solid material.

If they are improperly applied, nozzle vanes and turbine blades will be damaged.

The suitable size of solid material is 1.0～1.5 mm. It must not be larger than 1.5 mm. In case of activated carbon is used, the size should be max. 1.0 mm.

3) For your reference, several brands of solid material in the market are introduced as follows, although we take no responsibility of these product.

Name of bland	Name of Company	Address, Telephone
Turbine wash	(Selling agency) Turbo Systems United Co., Ltd.	Arca-central Bldg. 18F, 2-1, Kinshi 1-Chome, Sumida-ku, Tokyo 130-0013, Japan TEL: 03-5611-5994, FAX: 03-5611-5977
A.C. cleaner (activated coke)	(Selling agency) Ohchem Commerce Co., Ltd.	7-4, Higashikanda 2-Chome, Chiyoda-ku, Tokyo 101-0031, Japan TEL: 03-3864-7701, FAX: 03-3864-7702
MARINE GRIT No. 16 (Walnut)	(Selling agency) Hikawa Marine Co. (Sole agent) Mashin Shokai Ltd.	1-1, Kaigan-Dori 1-Chome, Chuo-ku, Kobe 650-0024, Japan TEL: 078-321-6656, FAX: 078-391-3255 4-48, Shinkidajima 7-Chome, Suminoe-ku, Osaka 559-0024, Japan TEL: 06-6683-5701, FAX: 06-6683-5770

3. Cleaning

1) Cleaning condition

a. Before operating a cleaning device, the engine load should be at service load (approx. 70～100% load).

b. Quantity of solid material per once is shown in Table 1.

Table 1 Recommendable quantity of solid material
(MAN B&W-TCA type turbochargers)

Turbocharger type	Quantity of solid material (litter)
TCA66	1.5
TCA77	2.0
TCA88	2.5

2) Procedure of cleaning (See Fig. 1)

a) Confirm that the valve ③ is closed firmly.

b) Before pouring solid material into the filling tank "A", open the valves ②, and then open the valve ① for 5～10 seconds.
The pipe "C" and nozzle "E" may have been clogged with the residual solid material. This operation make it possible to clean them.

c) Close the valves as the order of ②→①.
Confirm that the valves ② and ① are closed.

d) After opening the valve ③, pour a specified amount of solid material into the filling tank "A" from the hopper "B", then close the valve ③.

e) Open the valves in the order of ①→②, and then solid material is spouted into exhaust pipe through the pipe "C" and nozzle "E" for about 30 seconds.

f) Close the valves as the order of ②→①.

3) Interval of cleaning

It is recommended to carry out the turbine cleaning after every 24～50 hours operation so that heavy deposits, which will deteriorate a turbocharger performance, do not stick to the turbine.

4. Cautions

1) Do not carry out water washing at the same time as solid material washing to avoid adhesion of solid material in turbocharger.

2) Do not open any drain valve on exhaust pipes and turbocharger, otherwise solid material will burst out of such opening.

3) Be careful whether sparks draw out of chimney or not.
If they are dangerous, stop the cleaning.

4) Surging during cleaning has to be avoided.
If surging occurs, the air supply has to be adjusted by the valve ①

固形物洗浄要領	図 1
Cleaning Turbine by Solid Material	Fig. 1

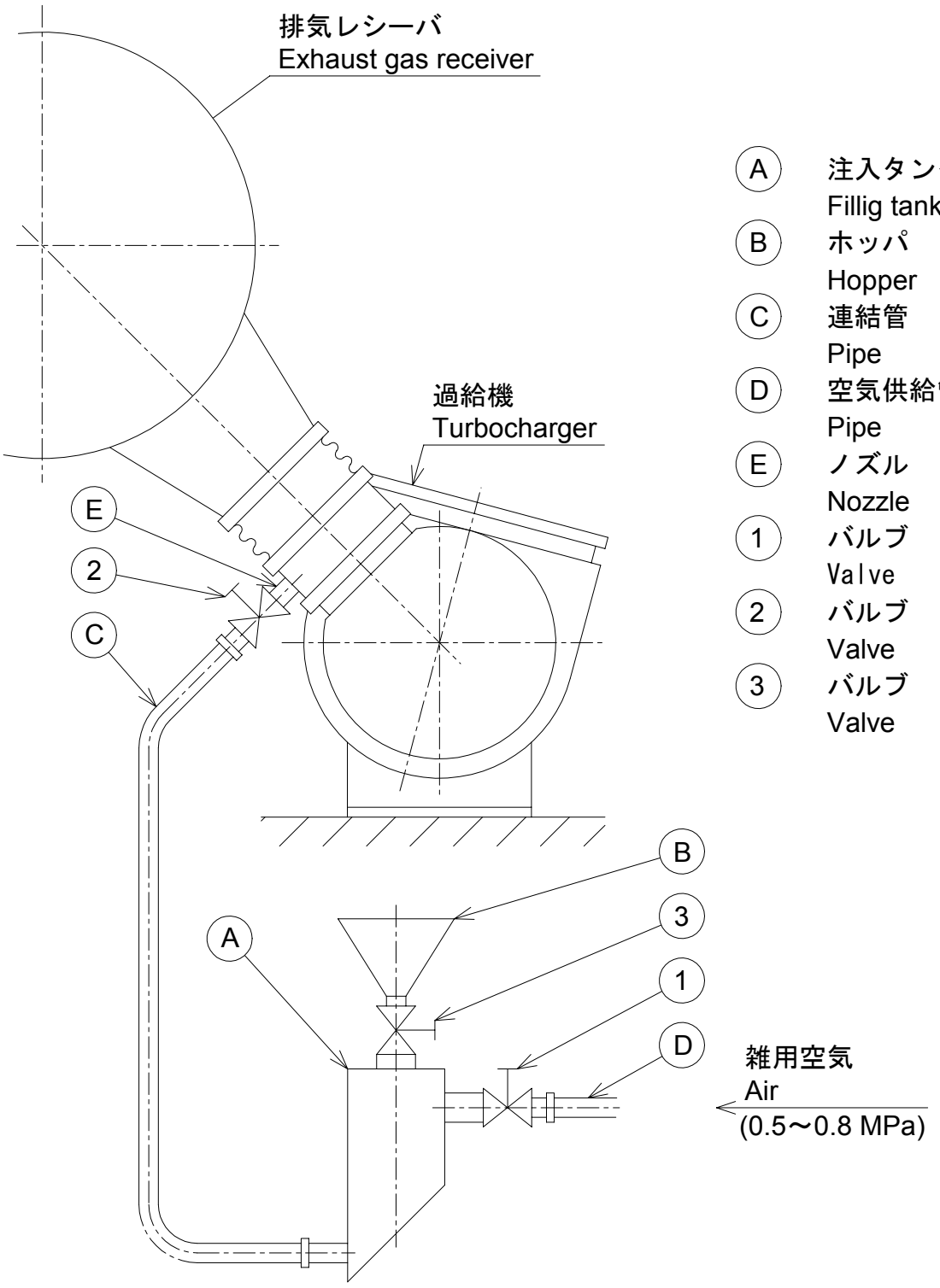

A 注入タンク Fillig tank
B ホッパ Hopper
C 連結管 Pipe
D 空気供給管 Pipe
E ノズル Nozzle
1 バルブ Valve
2 バルブ Valve
3 バルブ Valve

DRAWN	H.Uezono	MITSUI-MAN B&W MC ENGINES TURBOCHARGER CLEANING WITH SOLID MATERIAL (MAN B&W - NA Type)	No.	60	12
CHECKED			ME 2899L		
APPROVED					

Water washing of turbocharger at turbine side during engine running has been recommended on MITSUI-MAN B&W engines as the standard in order to maintain the best turbine performance.

On the other hand, however, the cleaning method with the solid material has been developed and recommended instead of water washing by several turbocharger marker.

In these circumstance, we install the cleaning device with solid material in addition to water wasting as the standard.

Cleaning method with solid material is shown in this sheet.

As for water cleaning, refer to ME2839.

三井造船株式会社　玉野事業所　ディーゼル設計部
MITSUI ENGINEERING AND SHIPBUILDING CO., LTD.
TAMANO WORKS
DIESEL ENGINE DESIGN DEPARTMENT

1. Outline of cleaning method with solid material

Solid material in tank are spouted into exhaust pipe before a turbocharger by compressed air and will remove deposit on nozzle vanes and turbine blades by their impact force.

This procedure can be executed at service load without reducing engine speed in most cases, while the engine load should be reduced drastically in case of the water washing.

2. Solid material

1) Formed activated carbon, grained activated carbon and crushed nut shells are suitable for solid material.

Rice and grain are not recommended as a dry cleaning material, as it may stick in the exhaust gas boiler.

2) The cleaning effect depends on shape, size, hardness and specific gravity of solid material.

If they are improperly applied, nozzle vanes and turbine blades will be damaged.

The suitable size of solid material is 1.0～1.5 mm. It must not be larger than 1.5 mm. In case of activated carbon is used, the size should be max. 1.0 mm.

3) For your reference, several brands of solid material in the market are introduced as follows, although we take no responsibility of these product.

Name of bland	Name of Company	Address, Telephone
Turbine wash	(Selling agency) Turbo Systems United Co., Ltd.	Arca-central Bldg. 18F, 2-1, Kinshi 1-Chome, Sumida-ku, Tokyo 130-0013, Japan TEL: 03-5611-5994, FAX: 03-5611-5977
A.C. cleaner (activated coke)	(Selling agency) Ohchem Commerce Co., Ltd.	7-4, Higashikanda 2-Chome, Chiyoda-ku, Tokyo 101-0031, Japan TEL: 03-3864-7701, FAX: 03-3864-7702
MARINE GRIT No. 16 (Walnut)	(Selling agency) Hikawa Marine Co. (Sole agent) Mashin Shokai Ltd.	1-1, Kaigan-Dori 1-Chome, Chuo-ku, Kobe 650-0024, Japan TEL: 078-321-6656, FAX: 078-391-3255 4-48, Shinkidajima 7-Chome, Suminoe-ku, Osaka 559-0024, Japan TEL: 06-6683-5701, FAX: 06-6683-5770

3. Cleaning

1) Cleaning condition

a. Turbocharger speeds at cleaning are shown in Table 1.
Before operating a cleaning device, the engine load should be adjusted so that the turbocharger speed is within the recommended range.

b. Quantity of solid material per once is shown in Table 1.

Table 1 Recommendable turbocharger speed and quantity of solid material (MAN B&W-NA type turbochargers)

Turbocharger type	Turbocharger speed (min^{-1})	Quantity of solid material (litter)
NA48/SO	13,000～15000	1.5
NA57/TO9	11,000～13,000	2.0
NA70/TO9	9,000～10,500	3.0

2) Procedure of cleaning (See Fig. 1)

a) Confirm that the valve ③ is closed firmly.

b) Before pouring solid material into the filling tank "A", open the valves ②, and then open the valve ① for 5～10 seconds.
The pipe "C" and nozzle "E" may have been clogged with the residual solid material. This operation make it possible to clean them.

c) Close the valves as the order of ②→①.
Confirm that the valves ② and ① are closed.

d) After opening the valve ③, pour a specified amount of solid material into the filling tank "A" from the hopper "B", then close the valve ③.

e) Open the valves in the order of ①→②, and then solid material is spouted into exhaust pipe through the pipe "C" and nozzle "E" for about 30 seconds.

f) Close the valves as the order of ②→①.

3) Interval of cleaning

It is recommended to carry out the turbine cleaning after every 24～50 hours operation so that heavy deposits, which will deteriorate a turbocharger performance, do not stick to the turbine.

4. Cautions

1) Do not carry out water washing at the same time as solid material washing to avoid adhesion of solid material in turbocharger.

2) Do not open any drain valve on exhaust pipes and turbocharger, otherwise solid material will burst out of such opening.

3) Be careful whether sparks draw out of chimney or not.
If they are dangerous, stop the cleaning.

4) Surging during cleaning has to be avoided.
If surging occurs, the air supply has to be adjusted by the valve ①

固形物洗浄要領	図 1
Cleaning Turbine by Solid Material	Fig. 1

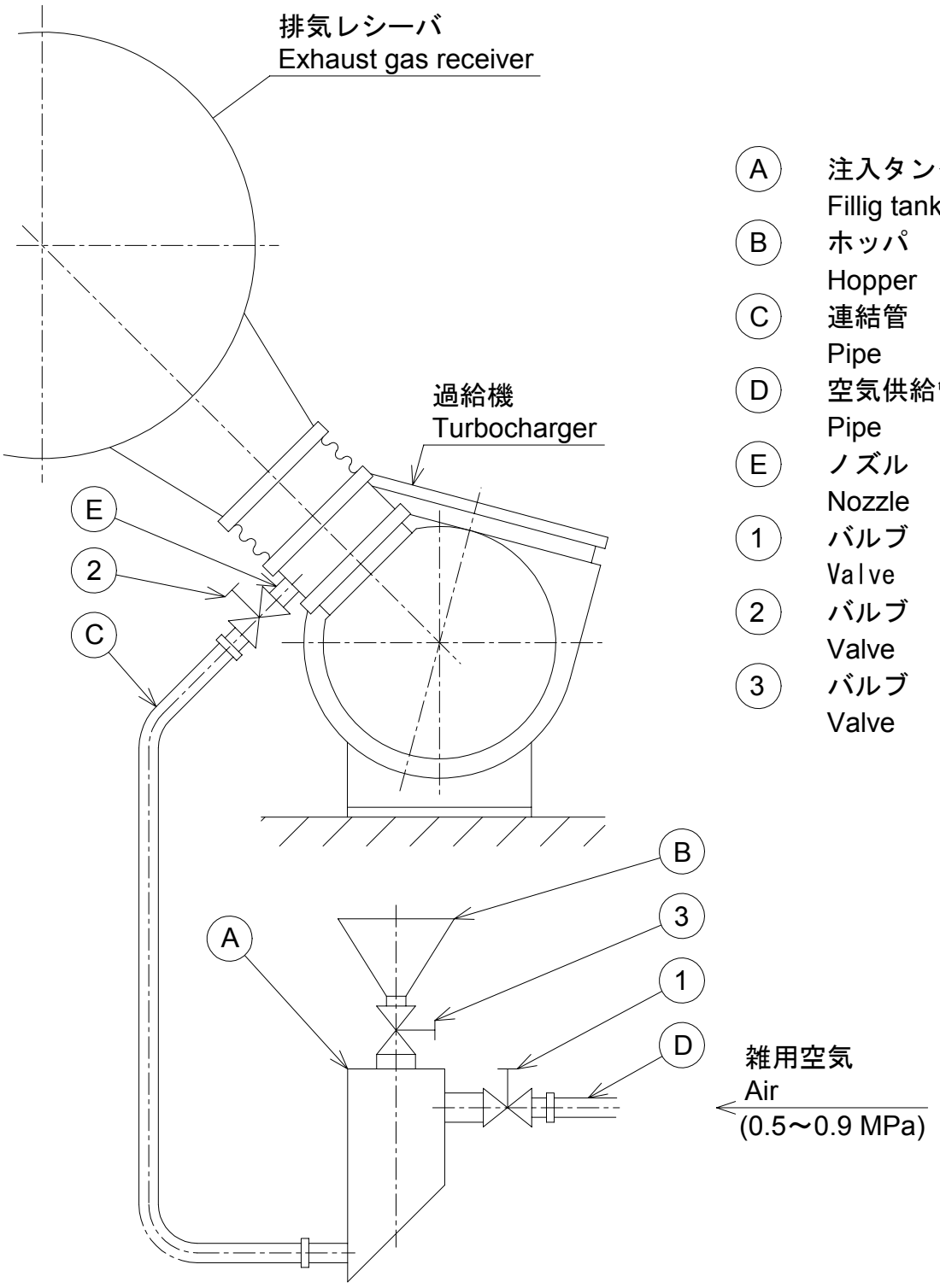

A 注入タンク Fillig tank
B ホッパ Hopper
C 連結管 Pipe
D 空気供給管 Pipe
E ノズル Nozzle
1 バルブ Valve
2 バルブ Valve
3 バルブ Valve

DRAWN	H.Uezono	MITSUI-MAN B&W MC ENGINES TURBOCHARGER CLEANING WITH SOLID MATERIAL (ABB - TPL Type)	No.	60	21
CHECKED			ME ４０１４D		
APPROVED					

Water washing of turbocharger at turbine side during engine running has been recommended on MITSUI-MAN B&W engines as the standard in order to maintain the best turbine performance.

On the other hand, however, the cleaning method with the solid material has been developed and recommended instead of water washing by several turbocharger marker.

In these circumstance, we install the cleaning device with solid material in addition to water wasting as the standard.

Cleaning method with solid material is shown in this sheet.

As for water cleaning, refer to ME4015.

三井造船株式会社　玉野事業所　ディーゼル設計部
MITSUI ENGINEERING AND SHIPBUILDING CO., LTD.
TAMANO WORKS
DIESEL ENGINE DESIGN DEPARTMENT

1. Outline of cleaning method with solid material

Solid material in tank are spouted into exhaust pipe before a turbocharger by compressed air and will remove deposit on nozzle vanes and turbine blades by their impact force.

This procedure can be executed at service load without reducing engine speed in most cases, while the engine load should be reduced drastically in case of the water washing.

2. Solid material

1) Formed activated carbon, grained activated carbon and crushed nut shells are suitable for solid material.

Rice and grain are not recommended as a dry cleaning material, as it may stick in the exhaust gas boiler.

2) The cleaning effect depends on shape, size, hardness and specific gravity of solid material.

If they are improperly applied, nozzle vanes and turbine blades will be damaged.

The cleaning materials should be used with our recommended size, which can be got, for example, with coffee mill.

The suitable size of solid material is 1.2 ~ 2.0 mm.

3) For your reference, several brands of solid material in the market are introduced as follows, although we take no responsibility of these product.

Name of bland	Name of Company	Address, Telephone
Turbine wash	(Selling agency) Turbo Systems United Co., Ltd.	Arca-central Bldg. 18F, 2-1, Kinshi 1-Chome, Sumida-ku, Tokyo 130-0013, Japan TEL: 03-5611-5994, FAX: 03-5611-5977
A.C. cleaner (activated coke)	(Selling agency) Ohchem Commerce Co., Ltd.	7-4, Higashikanda 2-Chome, Chiyoda-ku, Tokyo 101-0031, Japan TEL: 03-3864-7701, FAX: 03-3864-7702
OMT-701	(Selling agency) MARIX K.K. (Selling agency) O.M.T. Incorporated	Halifax Onarimon Bldg. 5F, 24-10, Nishishinbashi 3-Chome, Minato-ku, Tokyo 105-0003, Japan TEL: 03-3436-6371, FAX: 03-3434-8567 Kiji Bldg. 4F, 2-8, Hatchobori 4-Chome, Cyuo-ku, Tokyo 104-0003, Japan TEL: 03-3553-5077, FAX-03-3553-5076
MARINE GRIT No. 20 (Walnut)	(Selling agency) Hikawa Marine Co. (Sole agent) Mashin Shokai Ltd.	1-1, Kaigan-Dori 1-Chome, Chuo-ku, Kobe 650-0024, Japan TEL: 078-321-6656, FAX: 078-391-3255 4-48, Shinkidajima 7-Chome, Suminoe-ku, Osaka 559-0024, Japan TEL: 078-6683-5701, FAX: 06-6683-5770

3. Cleaning

1) Cleaning condition

a. Before operating a cleaning device, the gas temperature before the turbine should be below 520 °C.

b. Quantity of solid material per once is shown in Table 1.

Table 1 Recommendable quantity of solid material (ABB-TPL type turbochargers)

Turbocharger type	Quantity of solid material (liter/TC)
TPL69	1.0
TPL73	1.0
TPL77	1.5
TPL80	2.0
TPL85	3.0
TPL85	3.5

2) Procedure of cleaning (See Fig. 1)

a) Confirm that the valve ③ is closed firmly.

b) Before pouring solid material into the filling tank "A", open the valves ②, and then open the valve ① for 5 ~ 10 seconds.
A pipe "C" and nozzle "E" may have been clogged with the residual solid material. This operation make it possible to clean them.

c) Close the valves as the order of ②→①.
Confirm that the valves ② and ① are closed.

d) After opening the valve ③, pour a specified amount of solid material into the filling tank "A" from the hopper "B", then close the valve ③.

e) Open the valve ① , and then open the valve ② for 1 minute. By this operation, the solid material is spouted into exhaust pipe through the pipe "C" and nozzle "E".

f) Close the valves as the order of ②→①.

3) Interval of cleaning

It is recommended to carry out the turbine cleaning after every 20 ~ 50 hours operation so that heavy deposits, which will deteriorate the turbocharger performance, do not stick to the turbine.

4. Cautions

1) Do not carry out water washing at the same time as solid material washing to avoid adhesion of solid material in turbocharger.

2) Do not open any drain valve on exhaust pipes and turbochargers, otherwise solid material will burst out of such opening.

3) Be careful whether sparks draw out of chimney or not.
If they are dangerous, stop the cleaning.

4) Surging may occur during solid material washing.
There is no problem with single-occurred surging.

5) Be careful of frequent cleaning by solid material, otherwise, erosion damage may occur on gas casing.
Normally, solid material should be spouted only one time per one cleaning.
If cleaning effect is not found be one time cleaning, try it again only one more time.

固形物洗浄要領	図 1
Cleaning Turbine by Solid Material	Fig. 1

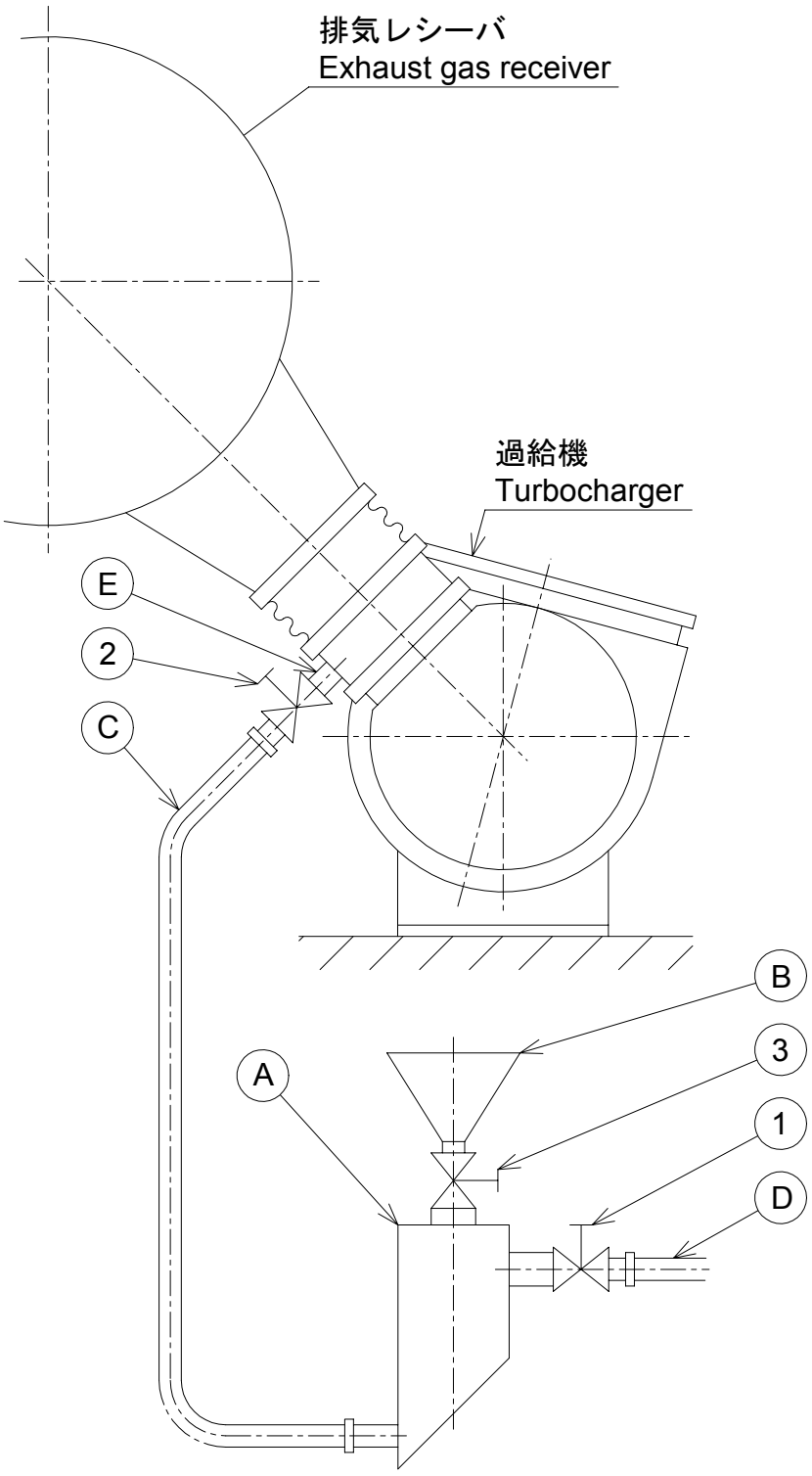

A 注入タンク Fillig tank
B ホッパ Hopper
C 連結管 Pipe
D 空気供給管 Pipe
E ノズル Nozzle
1 バルブ Valve
2 バルブ Valve
3 バルブ Valve

DRAWN	H.Uezono	MITSUI-MAN B&W MC ENGINES TURBOCHARGER CLEANING WITH SOLID MATERIAL (ABB - VTR Type)	No.	60	15
CHECKED			ME 3488H		
APPROVED					

Water washing of turbocharger at turbine side during engine running has been recommended on MITSUI-MAN B&W engines as the standard in order to maintain the best turbine performance.

On the other hand, however, the cleaning method with the solid material has been developed and recommended instead of water washing by several turbocharger marker.

In these circumstance, we install the cleaning device with solid material in addition to water wasting as the standard.

Cleaning method with solid material is shown in this sheet.

As for water cleaning, refer to ME1086.

三井造船株式会社　玉野事業所　ディーゼル設計部
MITSUI ENGINEERING AND SHIPBUILDING CO., LTD.
TAMANO WORKS
DIESEL ENGINE DESIGN DEPARTMENT

1. Outline of cleaning method with solid material

Solid material in tank are spouted into exhaust pipe before a turbocharger by compressed air and will remove deposit on nozzle vanes and turbine blades by their impact force.

This procedure can be executed at service load without reducing engine speed in most cases, while the engine load should be reduced drastically in case of the water washing.

2. Solid material

1) Formed activated carbon, grained activated carbon and crushed nut shells are suitable for solid material.

Rice and grain are not recommended as a dry cleaning material, as it may stick in the exhaust gas boiler.

2) The cleaning effect depends on shape, size, hardness and specific gravity of solid material.

If they are improperly applied, nozzle vanes and turbine blades will be damaged.

The cleaning materials should be used with our recommended size, which can be got, for example, with coffee mill.

- nut shell	max. 1.2 mm
- grained carbon	max. 1.0 mm

3) For your reference, several brands of solid material in the market are introduced as follows, although we take no responsibility of these product.

Name of bland	Name of Company	Address, Telephone
Turbine wash	(Selling agency) Turbo Systems United Co., Ltd.	Arca-central Bldg. 18F, 2-1, Kinshi 1-Chome, Sumida-ku, Tokyo 130-0013, Japan TEL: 03-5611-5994, FAX: 03-5611-5977
A.C. cleaner (activated coke)	(Selling agency) Ohchem Commerce Co., Ltd.	7-4, Higashikanda 2-Chome, Chiyoda-ku, Tokyo 101-0031, Japan TEL: 03-3864-7701, FAX: 03-3864-7702
OMT-701	(Selling agency) MARIX K.K. (Selling agency) O.M.T. Incorporated	Halifax Onarimon Bldg. 5F, 24-10, Nishishinbashi 3-Chome, Minato-ku, Tokyo 105-0003, Japan TEL: 03-3436-6371, FAX: 03-3434-8567 Kiji Bldg. 4F, 2-8, Hatchobori 4-Chome, Cyuo-ku, Tokyo 104-0003, Japan TEL: 03-3553-5077, FAX-03-3553-5076
MARINE GRIT No. 20 (Walnut)	(Selling agency) Hikawa Marine Co. (Sole agent) Mashin Shokai Ltd.	1-1, Kaigan-Dori 1-Chome, Chuo-ku, Kobe 650-0024, Japan TEL: 078-321-6656, FAX: 078-391-3255 4-48, Shinkidajima 7-Chome, Suminoe-ku, Osaka 559-0024, Japan TEL: 078-6683-5701, FAX: 06-6683-5770

3. Cleaning

1) Cleaning condition

a. Turbocharger speeds at cleaning are shown in Table 1.
Before operating a cleaning device, the engine load should be adjusted so that the turbocharger speed is within the recommended range.

b. Quantity of solid material per once is shown in Table 1.

Table 1 Recommendable turbocharger speed and quantity of solid material (ABB-VTR type turbochargers)

Turbocharger type	Turbocharger speed (rpm)	Quantity of solid material (kg)
VTR214	22,000～26,000	approx. 0.3
VTR254	17,000～21,000	approx. 0.4
VTR304	15,000～18,000	approx. 0.5
VTR354	12,000～15,000	approx. 0.8
VTR454	9,500～12,000	approx. 1.3
VTR564	7,500～9,500	approx. 1.8
VTR714	6,000～7,500	approx. 2.3

2) Procedure of cleaning (See Fig. 1)

a) Confirm that the valve ④ is closed firmly.

b) Before pouring solid material into the filling tank "A", open the valve ②, ③ and then open the valve ① for 5～10 seconds.
The pipe "C" and the nozzle "E" may have been clogged with residual solid material. This operation make it possible to clean them.

c) Close the valves as the order of ③→②→①.
Confirm that the valve ② and ① are closed.

d) After opening the valve ④, pour a specified amount of solid material into the filling tank "A", then close the valve ④.

e) Open the valves as the order of ①→②→③, and then solid material is spouted into exhaust pipe through the pipe "C" and nozzle "E" for about 30 seconds.

f) Close the valves as the order of ③→②→①.

3) Interval of cleaning

It is recommended to carry out the turbine cleaning after every 7～10 days operation so that heavy deposits, which will deteriorate the turbocharger performance, do not stick to the turbine.

4. Cautions

1) Do not carry out water washing at the same time as solid material washing to avoid adhesion of solid material in turbocharger.

2) Do not open any drain valve on exhaust pipes and turbochargers, otherwise solid material will burst out of such opening.

3) Be careful whether sparks draw out of chimney or not.
If they are dangerous, stop the cleaning.

4) Surging may occur during solid material washing.
There is no problem with single-occurred surging.

5) Be careful of frequent cleaning by solid material, otherwise, erosion damage may occur on gas casing.
Normally, solid material should be spouted only one time per one cleaning.
If cleaning effect is not found be one time cleaning, try it again only one more time.

固形物洗浄要領	図 1
Cleaning Turbine by Solid Material	Fig. 1

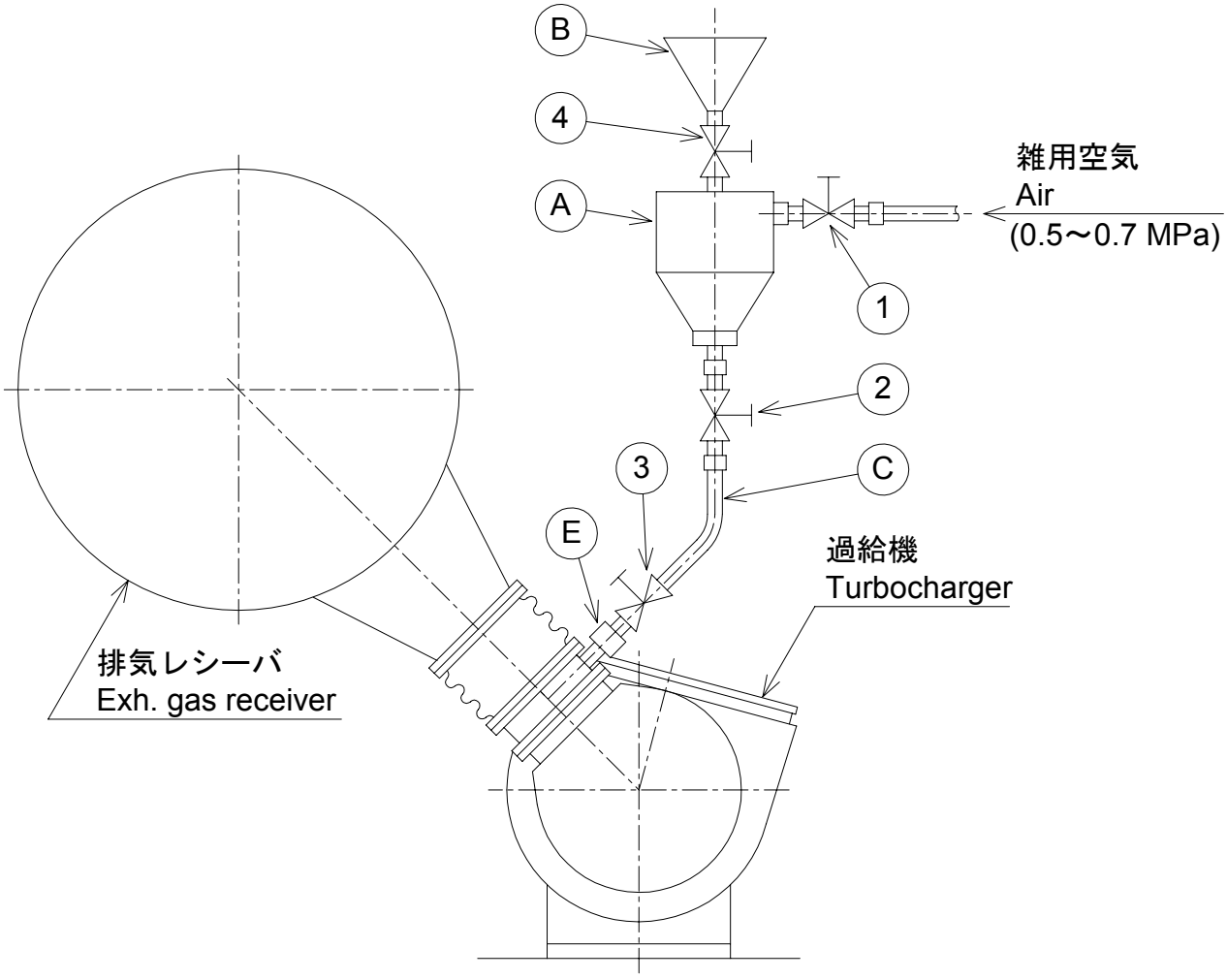

A	：	注入タンク Filling Tank	1	：	バルブ Valve
B	：	洗浄剤投入口 Filling Tank	2	：	バルブ Valve
C	：	連結管 Pipe	3	：	バルブ Valve
E	：	ノズル Nozzle	4	：	バルブ Valve

DRAWN	H.Uezono	MITSUI-MAN B&W MC ENGINES TURBOCHARGER CLEANING WITH SOLID MATERIAL (MITSUBISHI - MET Type)	No.	60	14
CHECKED			ME ３４４４G		
APPROVED					

Water washing of turbocharger at turbine side during engine running has been recommended on MITSUI-MAN B&W engines as the standard in order to maintain the best turbine performance.

On the other hand, however, the cleaning method with the solid material has been developed and recommended instead of water washing by several turbocharger marker.

In these circumstance, we install the cleaning device with solid material as the standard.

Cleaning method with solid material is shown in this sheet.

三井造船株式会社　玉野事業所　ディーゼル設計部
MITSUI ENGINEERING AND SHIPBUILDING CO., LTD.
TAMANO WORKS
DIESEL ENGINE DESIGN DEPARTMENT

1. Outline of cleaning method with solid material

Solid material in tank are spouted into exhaust pipe before a turbocharger by compressed air and will remove deposit on nozzle vanes and turbine blades by their impact force.

This procedure can be executed at service load without reducing engine speed in most cases, while the engine load should be reduced drastically in case of the water washing.

2. Solid material

1) Crushed nut shells are suitable for solid material.

Rice and grain are not recommended as a dry cleaning material, as it may stick in the exhaust gas boiler.

2) The cleaning effect depends on shape, size, hardness and specific gravity of solid material.

If they are improperly applied, nozzle vanes and turbine blades will be damaged.

The cleaning materials should be used with our recommended size, which can be got, for example, with coffee mill.

- nut shell grained size : 2.0～2.8 mm (MARINE GRIT No. 8)

3. Cleaning

1) Cleaning condition

a. Turbocharger speeds at cleaning are shown in Table 1.
Before operating a cleaning device, the engine load should be adjusted so that the turbocharger speed is within the recommended range.

b. Quantity of solid material per once is shown in Table 1.

Table 1 Recommendable turbocharger speed and quantity of solid material (MITSUBISHI-MET type turbochargers)

Turbocharger type	Turbocharger speed (min^{-1})	Quantity of solid material (liter)	Filling tank capacity (liter)
MET33	23,300	0.4	1.5
MET42	18,800	0.7	1.5
MET53	14,800	1.6	3.0
MET60	13,300	2.1	3.0
MET66	11,900	2.6	3.0
MET71	11,000	2.6	3.0
MET83	9,400	3.5	4.0
MET90	8,500	3.5	4.0

2) Procedure of cleaning (See Fig. 1)

a) Open the valves as the order of ①→④ to pass air for 1～2 minutes for cooling of the cleaning device.

b) Close the valves as the order of ④→①.

c) Pour a specified amount of solid material into the filling tank ②, then close the cap of the filling tank.

d) Open the valves as the order of ①→④, and then solid material is spouted into exhaust pipe.

f) Close the valves as the order of ④→①.

3) Interval of cleaning

It is recommended to carry out the turbine cleaning after every 100 hours operation so that heavy deposits, which will deteriorate the turbocharger performance, do not stick to the turbine.

4. Cautions

1) Do not open any drain valve on exhaust pipes and turbochargers, otherwise solid material will burst out of such opening.

2) Be careful whether sparks draw out of chimney or not.
If they are dangerous, stop the cleaning.

3) Should some such sudden change take place in engine operation during injection of the cleaning medium as, for example, very severe surging, etc., use about 1/2 of the quantity specified in Table 1 per cleaning for trail.
Make sure that the engine undergoes stabilized operation, and then repeat the cleaning the same way.
Employ this cleaning method thereafter as standard practice.

4) Be careful of frequent cleaning by solid material, otherwise, erosion damage may occur on gas casing.
If the repeated cleaning also fails to improve the situation, exhaust temperature, scavenging pressure, turbocharger revolutions, etc., then open up the turbocharger for cleaning.

固形物洗浄要領	図 1
Cleaning Turbine by Solid Material	Fig. 1

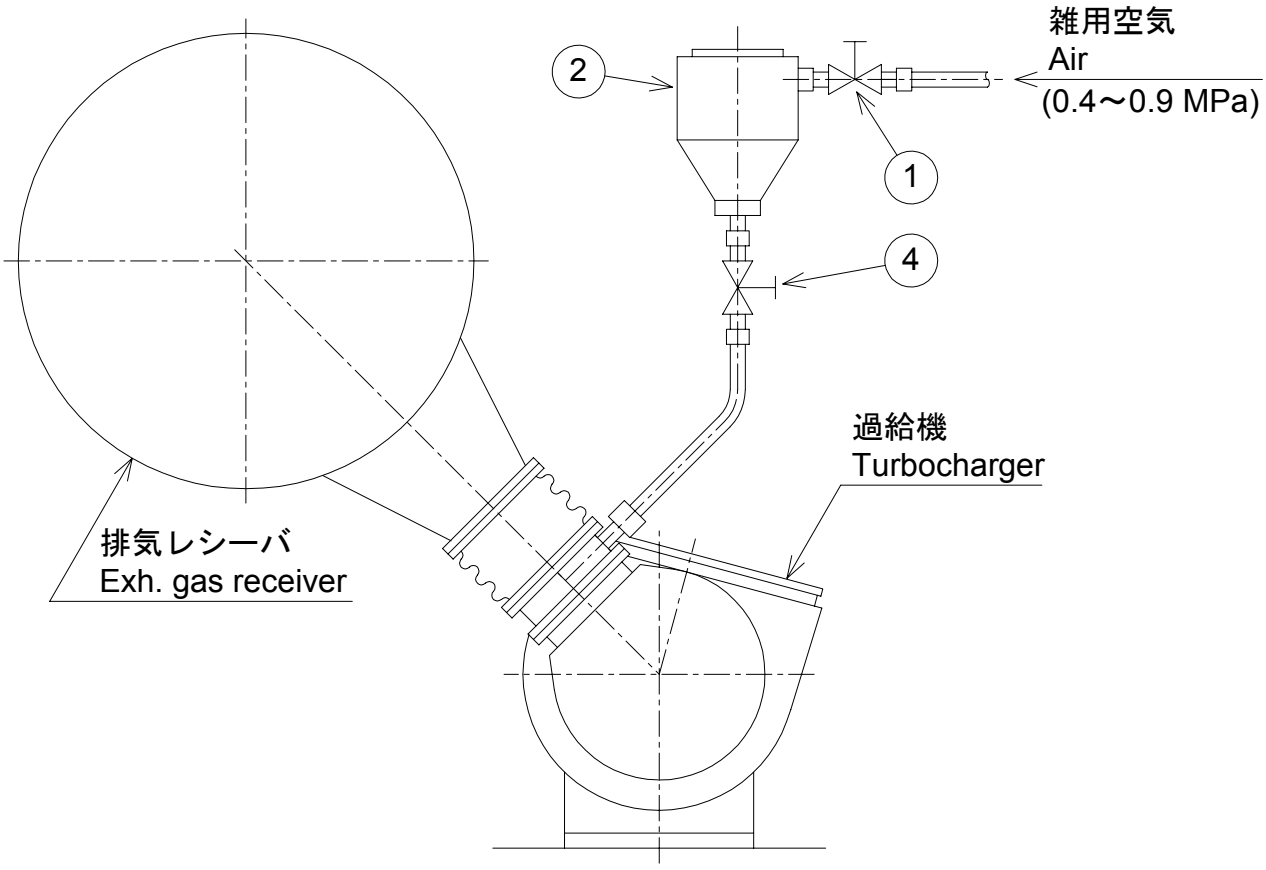

① : バルブ
Valve

② : 注入タンク
Filling Tank

④ : バルブ
Valve

DRAWN	H. Uezono	MITSUI-MAN B&W MC ENGINES TURBOCHARGER CLEANING WITH WATER (MAN B&W - TCA Type)	No.	60	24
CHECKED			ME 4070A		
APPROVED					

If dry cleaning is not sufficient to remove the hard, glazed residual layer, cleaning of the turbine can be effected during operation by means of the water washing device.
The procedure of water washing is shown below.

1. Reduce the engine load until turbine inlet gas temperature has dropped to 320°C.
   Following turbocharger speed are of guidance only.

   TCA66 ; 9,500 min^{-1}
   TCA77 ; 8,000 min^{-1}
   TCA88 ; 7,000 min^{-1}

2. After a lapse of time of about 10 minutes, put the washing device into action.
   1) Set the three-way valve ④ to “WASHING”.
   2) Open the three-way valve under the gas outlet casing to "T/C CLEANING" position.
   3) Open the stop valve ②.
   4) Washing period is approximately 10 ~ 20 minutes at a water pressure of 0.20 ~ 0.30MPa - check at pressure gauge on the pressure reducing valve ③.
   5) Cut off the water admission at the stop valve ②.
   6) Run the engine for about 2 minutes to allow the turbine to dry.
   7) Repeat the above procedure 3) ~ 6), 3～5 times.

4. At the end of washing process :
   1) Cut off the water admission by closing the stop valve ②.
   2) Set the three-way valve ④ to “BLOWING OUT”.
   3) Close the three-way valve under the gas outlet casing to "ENGINE RUNNING" position.

5. Run the engine at about 25% load for 8 minutes to allow the turbine to dry and then increase the load slowly, while listening for noise indicating that rotating parts make contact and checking for undue vibrations that did not exist before.

6. It is recommended to carry out the turbine cleaning every 250 hour’s operation, so that heavy deposits, which will deteriorate a turbocharger performance, do not stick to a turbine.

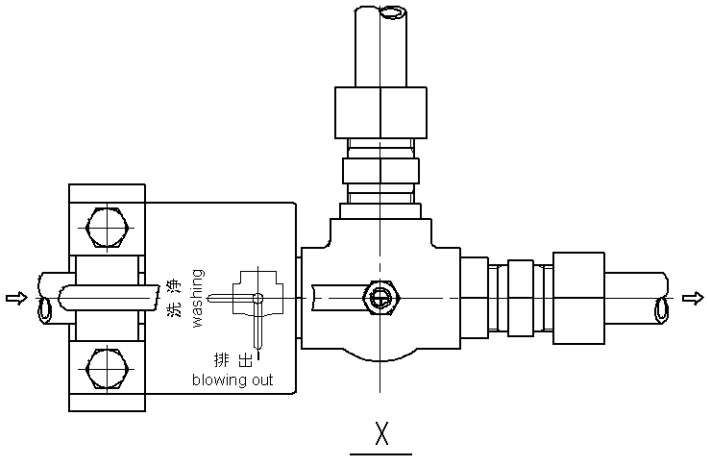

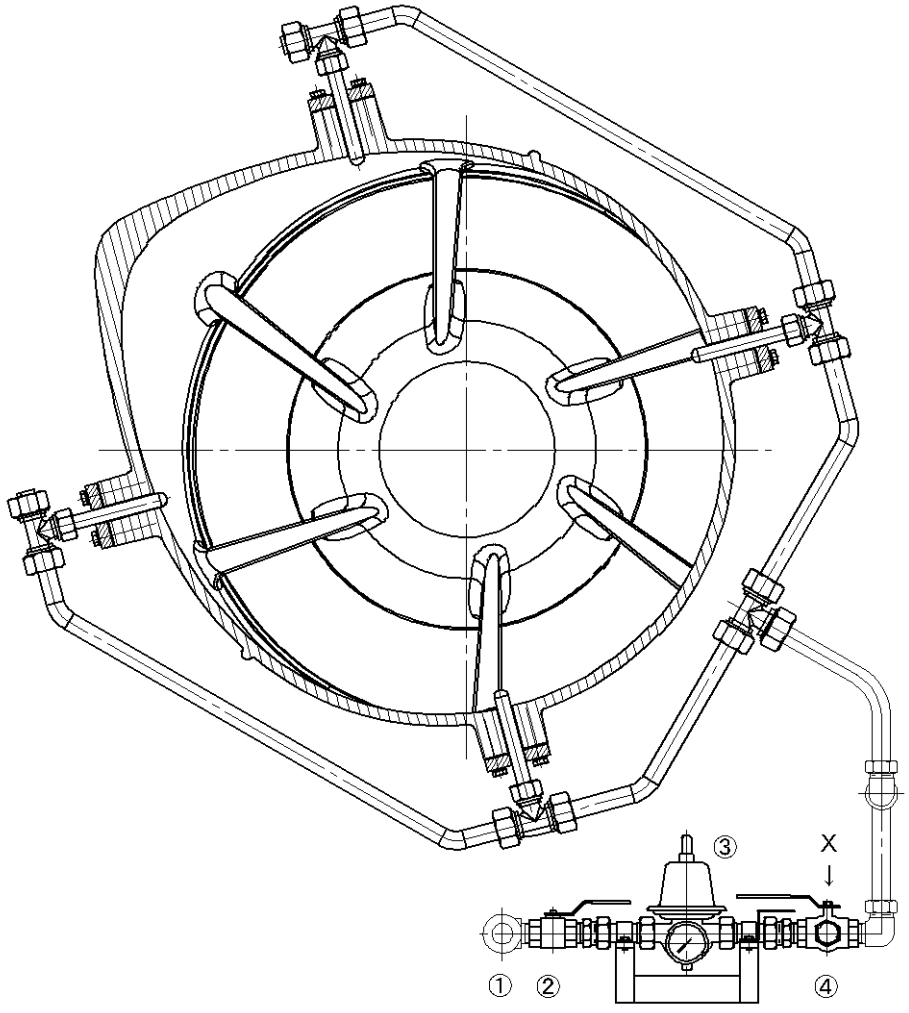

① Water supply pipe
② Stop Valve
③ Pressure reducing valve
④ Three-way valve

Fig. 1 Cleaning installations

DRAWN	H.Uezono	MITSUI-MAN B&W MC ENGINES TURBOCHARGER CLEANING WITH WATER (MAN B&W - NA Type)	No.	60	11
CHECKED			ME 2839D		
APPROVED					

If dry cleaning is not sufficient to remove the hard, glazed residual layer, cleaning of the turbine can be effected during operation by means of the water washing device.
The procedure of water washing is shown below.

1. Reduce the engine load until turbine inlet gas temperature has dropped to 200℃ or until turbocharger speed has dropped to approximately;

   NA48/T7, T8 ; 3,400 min^{-1}
   NA48/S ; 3,200 min^{-1}
   NA57/T7, T8 ; 2,800 min^{-1}
   NA57/T9 ; 2,700 min^{-1}
   NA70/T7 ; 2,300 min^{-1}
   NA70/T9 ; 2,200 min^{-1}

2. After a lapse of time of about 15 minutes, put the washing device into action.
   1) Set the three-way valve ④ to “WASHING”.
   2) Open the three-way valve under the gas outlet casing to "T/C CLEANING" position.
   3) Open all spray nozzles ⑤ by turning the needles.
   4) Set the stop valve ② to flow position.

3. Washing period is approximately 10～20 minutes at a water pressure of 0.15～0.20 MPa - check at pressure gauge on the pressure reducing valve ③.

4. At the end of washing process :
   1) Close all spray nozzles ⑤.
   2) Cut off the water admission at the stop valve ②.
   3) Set the three-way valve ④ to “BLOWING OUT”.
   4) Close the three-way valve under the gas outlet casing to "ENGINE RUNNING" position.

5. Run the engine at about 25% load for 10 minutes to allow the turbine to dry and then increase the load slowly, while listening for noise indicating that rotating parts make contact and checking for undue vibrations that did not exist before.

6. It is recommended to carry out the turbine cleaning after every one week operation, so that heavy deposits, which will deteriorate a turbocharger performance, do not stick to a turbine.

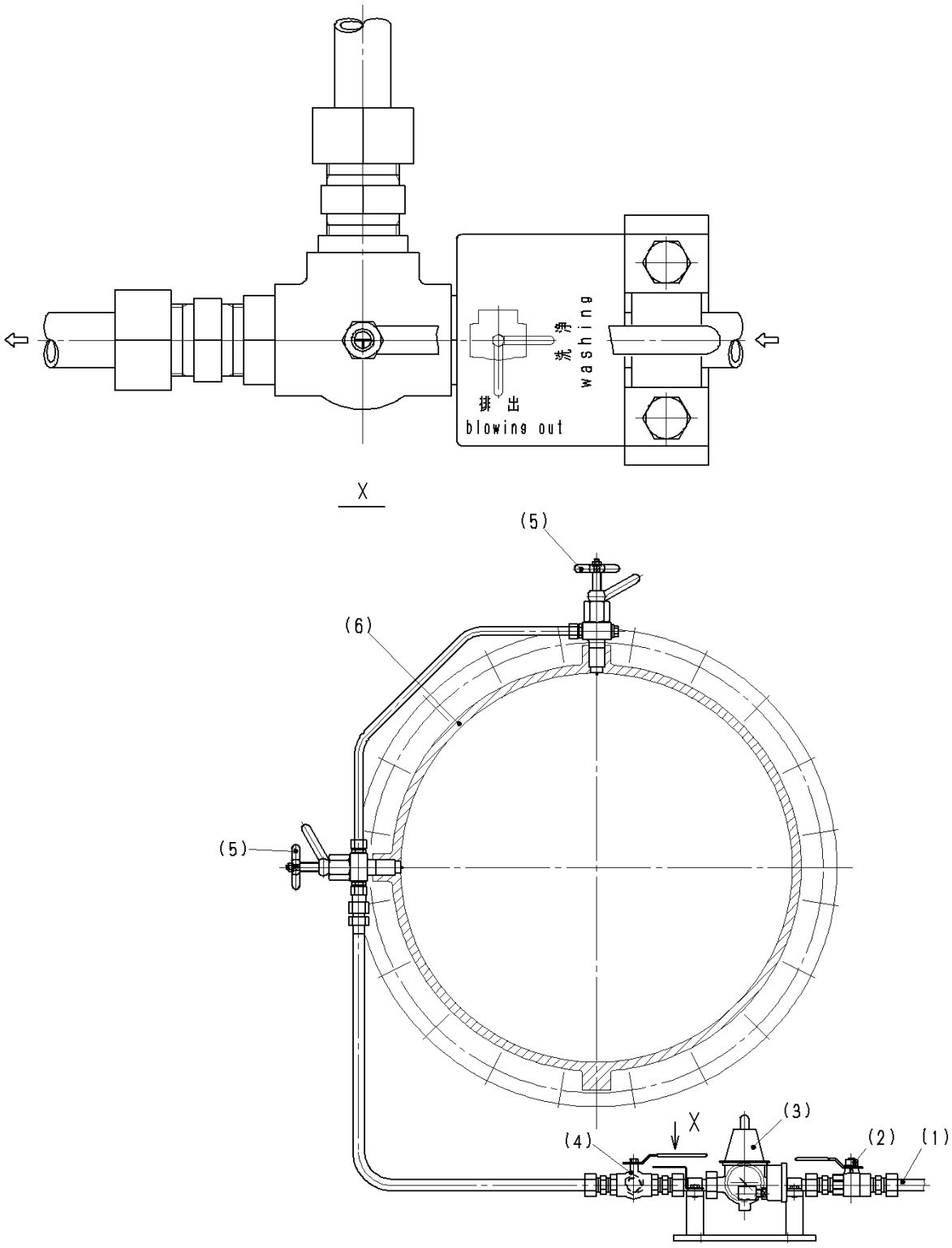

1. 洗浄水管
   Water supply pipe
2. 元弁
   Stop Valve
3. 減圧弁
   Pressure reducing valve
4. 三方コック
   Three-way valve
5. 洗浄ノズル
   Spray nozzle
6. 排気管あるいはガス入口ケーシング
   Exhaust pipe or gas inlet casing

Fig. 1 Cleaning installations

DRAWN	H.Uezono	MITSUI-MAN B&W MC ENGINES TURBOCHARGER CLEANING WITH WATER (ABB - TPL Type)	No.	60	22
CHECKED			ME ４０１５B		
APPROVED					

If dry cleaning is not sufficient to remove the hard, glazed residual layer, cleaning of the turbine can be effected during operation by means of the water washing device.
The procedure of water washing is shown below.

1. Engine operation when cleaning

   Reduce the engine output until the scavenging air pressure 0.03 ~ 0.06 MPa, and keep the condition about 10 minutes to get steady gas temperature. After then, water injection should be started.

   The gas temperature before the turbine may rise up during cleaning, however, keep less than 430 °C.

   The prescribed water injection pressure and the duration of water injection must be observed without fail. Smaller volumes of water can lead to an inadequate cleaning effect. Larger volumes of water result in impermissible thermal stresses and possible turbine touching.

2. Cleaning procedure
   1) Set the three-way valve under the gas outlet casing to "T/C CLEANING" position.
   2) Set the three-way valve ④ to "WASHING".
   3) Open the stop valve ②. The water pressure is about 0.10 MPa. - check at pressure gauge on the pressure reducing valve ③.
   4) Inject water for 5 minutes.
   5) Close the stop valve ②, and then set the tree-way valve ④ to "SEAL AIR" position.
   6) After draining is stopped, set the three-way valve under the gas outlet casing to "ENGINE RUNNING" position.

3. Cleaning water
   Clean fresh water free from cleaning agents and solvents must be used.

4. While injecting water, the condition of draining water from the tree-way valve under the gas outlet casing must be confirmed. Cleaning effect can be surmised from the colour of the drain.

5. After the cleaning, operate the engine at the same output for 10 minutes to dry up, then raise the engine output.

6. Cleaning should be done every 50 to 500 hours operation. This period may change according to the dirt.

7. Cleaning must not be done at the arrival in port. Casings may not be dried up well and corrosion may be occurred.

8. Cleaning should be started periodically after starting operation or overhaul, when deposit is not so heavy. Cleaning at heavy deposits on the turbine may cause much unbalance of the turbine.

A “0”
B “洗浄”
“WASHING”
C “シールエア”
“SEAL AIR”

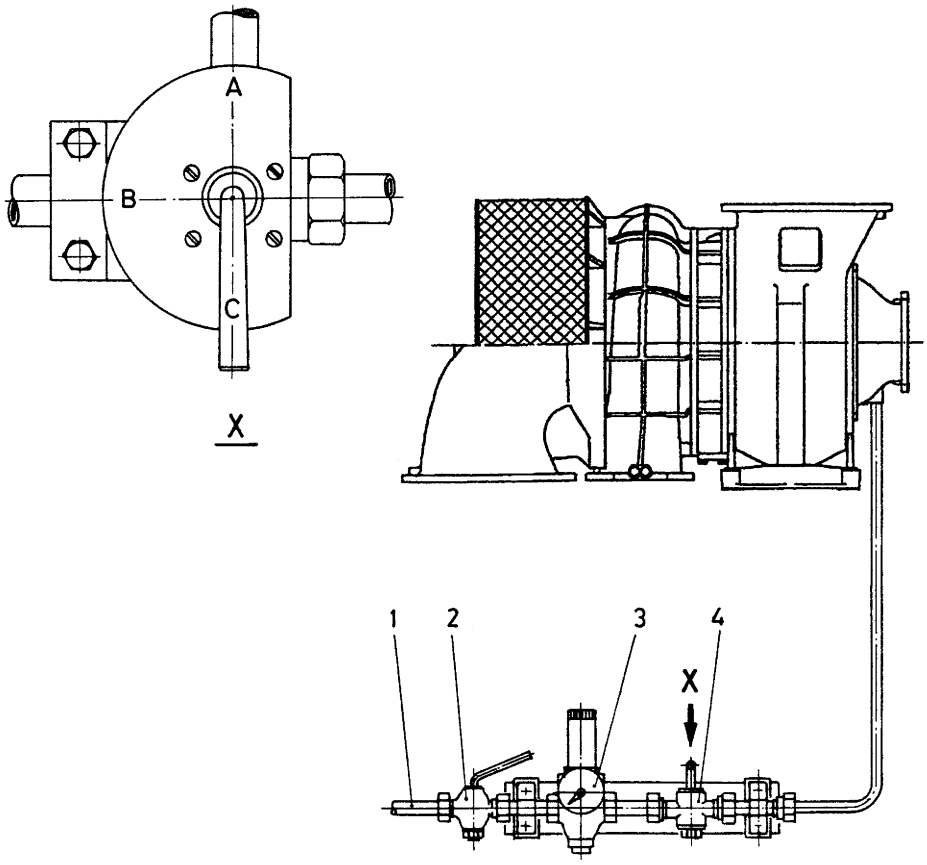

1. 洗浄水管
Water supply pipe
2. 元弁
Stop Valve
3. 減圧弁
Pressure reducing valve
4. 三方コック
Three-way valve
5. 洗浄ノズル
Spray nozzle
6. 排気管あるいはガス入口ケーシング
Exhaust pipe or gas inlet casing

Fig. 1 Cleaning installations

DRAWN	H.Uezono	MITSUI-MAN B&W MC ENGINES TURBOCHARGER CLEANING WITH WATER (ABB - VTR Type)	No.	60	3
CHECKED			ME 1086M		
APPROVED					

If dry cleaning is not sufficient to remove the hard, glazed residual layer, cleaning of the turbine can be effected during operation by means of the water washing device.
The procedure of water washing is shown below.

1. Engine operation when cleaning

   Reduce the engine output until the gas temperature before the turbine and turbocharger speed as shown in table 1, and keep the condition about 30 minutes to get steady gas temperature. After then, water injection should be started.

   If the time to get steady condition is short, good cleaning effect may not be got because of evaporation of too much water, or tips of turbine blades may be rubbed with shroud ring during cleaning because of too much temperature difference.

   Table 1

	VTR454	VTR564	VTR714
T/C Speed (min^{-1})	2500～3000	2000～2400	1600～1900
Gas temp. before T/C (℃)	about 250		

2. Cleaning procedure

   Take care not to open valves V1 and V2 at the same time, when starting cleaning.

   1) Set the three-way valve V4 under the gas outlet casing to "T/C CLEANING" position.
   2) Open the valve V1, then slowly the valve V3.
      Adjust the water pressure of 0.15～0.20 MPa.
      Keep the same condition until the drain comes from the three way valve V4. In case drain does not come yet after 6 minutes, raise the water pressure 0.02～0.05 MPa more and keep the condition for 3 minutes.

3) 3 minutes after confirming the drain water from three-way valve V4, open the valve V2 and keep it for about 10 minutes.
4) Close the valve V2. At 3 minutes after then, close the valve V1.
5) After draining is stopped, set the three-way valve V4 to "ENGINE RUNNING" position.

3. Cleaning water
Fresh water (below 60℃) used for cleaning. Take care to inject appropriate water quantity. Too little water causes bad cleaning effect and too many causes water to go into the bearing chamber of turbine side.

4. While injecting water, the condition of draining water from the tree-way valve V4 must be confirmed. Cleaning effect can be surmised from the colour of the drain.

5. After the cleaning, operate the engine at the same output for 3 minutes to dry up, then raise the engine output.

6. Cleaning should be done every 250～1000 hour's operation. This period may change according to the dirt.

7. Cleaning must not be done at the arrival in port. Casings may not be dried up well and corrosion may be occurred.

8. Cleaning should be started periodically after starting operation or overhaul, when deposit is not so heavy. Cleaning at heavy deposits on the turbine may cause much unbalance of the turbine.

8. It is recommended to carry out the turbine cleaning after every one week operation, so that heavy deposits, which will deteriorate a turbocharger performance, do not stick to a turbine.

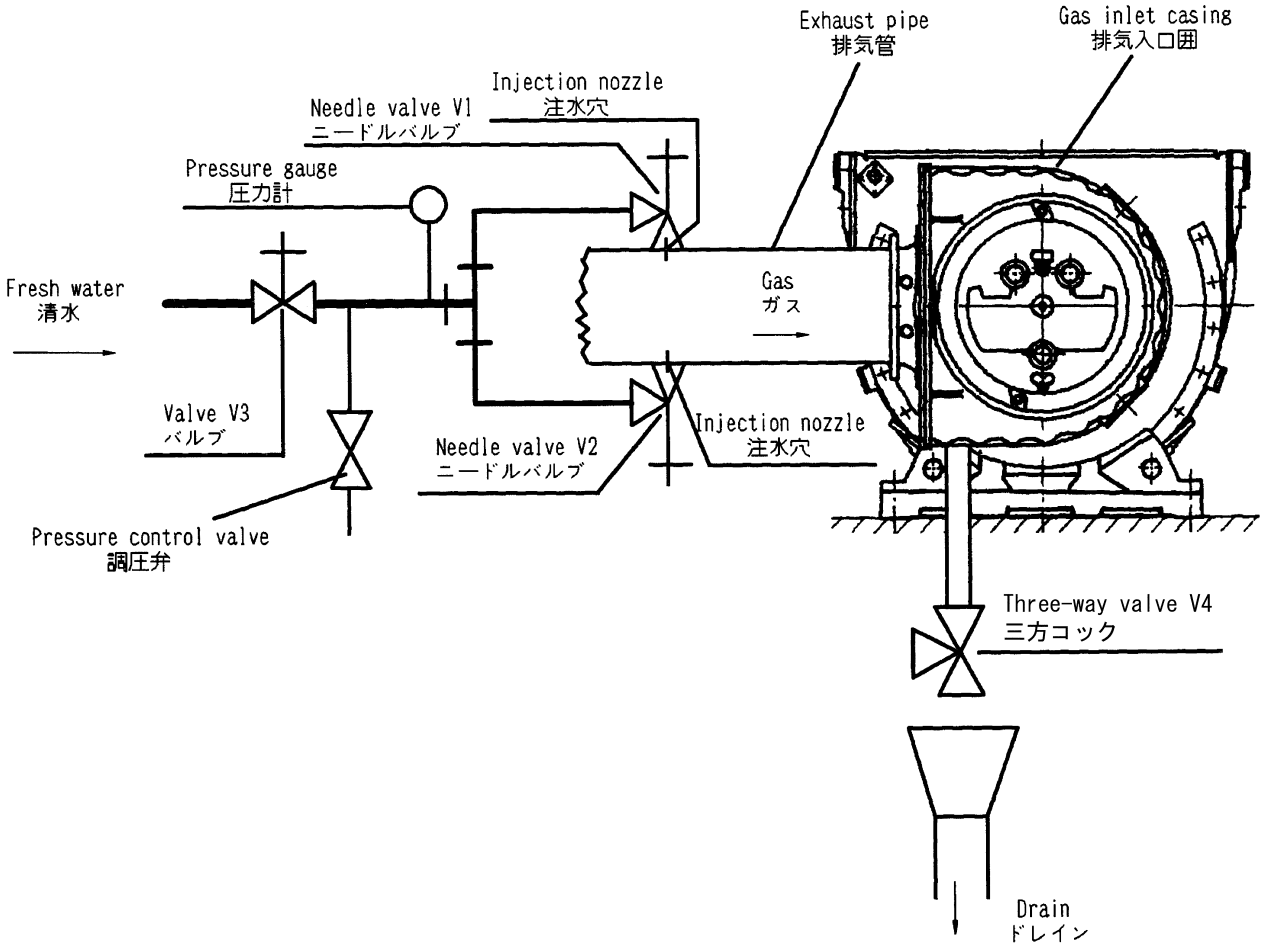

Fig. 1 Cleaning installations

DRAWN	H.Uezono	MITSUI-MAN B&W MC ENGINES CLEANING OF AIR COOLER	No.	28	11
CHECKED			ME 2890G		
APPROVED					

The air cooler must be kept sufficiently clean as the engine performance is influenced by scavenging air condition.

The air coolers are cleaned by injecting a chemical fluid through the spray pipe arrangement fitted to the air chamber above the cooler element (showering system) at the engine standstill condition.

Cleaning of air cooler must be carried out by showering system during ship's stay in port, because cleaning effect of air cooler will be increased by early maintenance.

However, as for the cleaning maintenance guidance, cleaning of air cooler should be carried out in case that the pressure difference of scavenging air at the air cooler inlet/outlet increase 150% against at the shop test.

三井造船株式会社　玉野事業所　ディーゼル設計部
MITSUI ENGINEERING AND SHIPBUILDING CO., LTD.
TAMANO WORKS
DIESEL ENGINE DESIGN DEPARTMENT

Cleaning procedure of showering system:

1. Cleaning of air cooler must be carried out at the engine standstill condition.

2. The cleaning fluid is made in the tank.
   As for the type of the cleaning fluid, please contact with cleaning fluid maker.
   For example: NEOS-one-1 : Fresh water
   1 : 2 or 1 : 1
   Temperature of cleaning fluid : about 50 ℃～60 ℃

a) Fig. 1 ; The engine equipped with scavenging air drain water high level alarm.
   (The engine equipped without auto drain trap valve.)

   1) Open the valves ⑥ and ⑧, then close valve ⑭ and all the other valves.
      Start the pump. The cleaning fluid from spray pipe arrangement on the top of air cooler circulates in the line.
   2) When the cleaning is finished, stop the pump and close the valve ⑧.
   3) Open the valves ① and ⑰ for flushing. After flushing with clean water, close the valve ①.
   4) Make sure that all flushing water flows out from air cooler to bilge, and close the valves ⑥ and ⑰.
   5) Close the valve ⑦. The valve ⑭ is to be opened. (The valve ⑭ is to be opened under engine running condition.)
   6) Filter in tank is to be cleaned up.

b) Fig. 2 ; The engine equipped with auto drain trap valve.

The inside of auto drain trap valve to be check regularly and cleaned at least 3 months. If this valve is clogged, the condensed water will enter into the cylinder, and thus cause excessive liner wear.

1) Open the valves ⑥ and ⑧, then close valve ⑭ and all the other valves. Start the pump. The cleaning fluid from spray pipe arrangement on the top of air cooler circulates in the line.
2) When the cleaning is finished, stop the pump and close the valve ⑧.
3) Open the valves ① and ⑰ for flushing. After flushing with clean water, close the valve ①.
4) Make sure that all flushing water flows out from air cooler to bilge, and close the valves ⑥ and ⑰.
5) Close the valve ⑦. The valve ⑭ is to be opened. (The valve ⑭ is to be opened under engine running condition. The valve ⑦ has orifice.)
6) Filter in tank is to be cleaned up.

c) Fig. 3 ; The engine equipped without both scavenging air drain water high level alarm and auto drain trap valve.

1) Open the valves ⑥, ⑦ and ⑧, then close valve ⑭ and all the other valves. Start the pump. The cleaning fluid from spray pipe arrangement on the top of air cooler circulates in the line.
2) When the cleaning is finished, stop the pump and close the valve ⑧.
3) Open the valves ① and ⑰ for flushing. After flushing with clean water, close the valve ①.
4) Make sure that all flushing water flows out from air cooler to bilge, and close the valves ⑥ and ⑰.
5) Close the valve ⑦. The valve ⑭ is to be opened. (The valve ⑭ is to be opened under engine running condition. The valve ⑦ has orifice.)
6) Filter in tank is to be cleaned up.

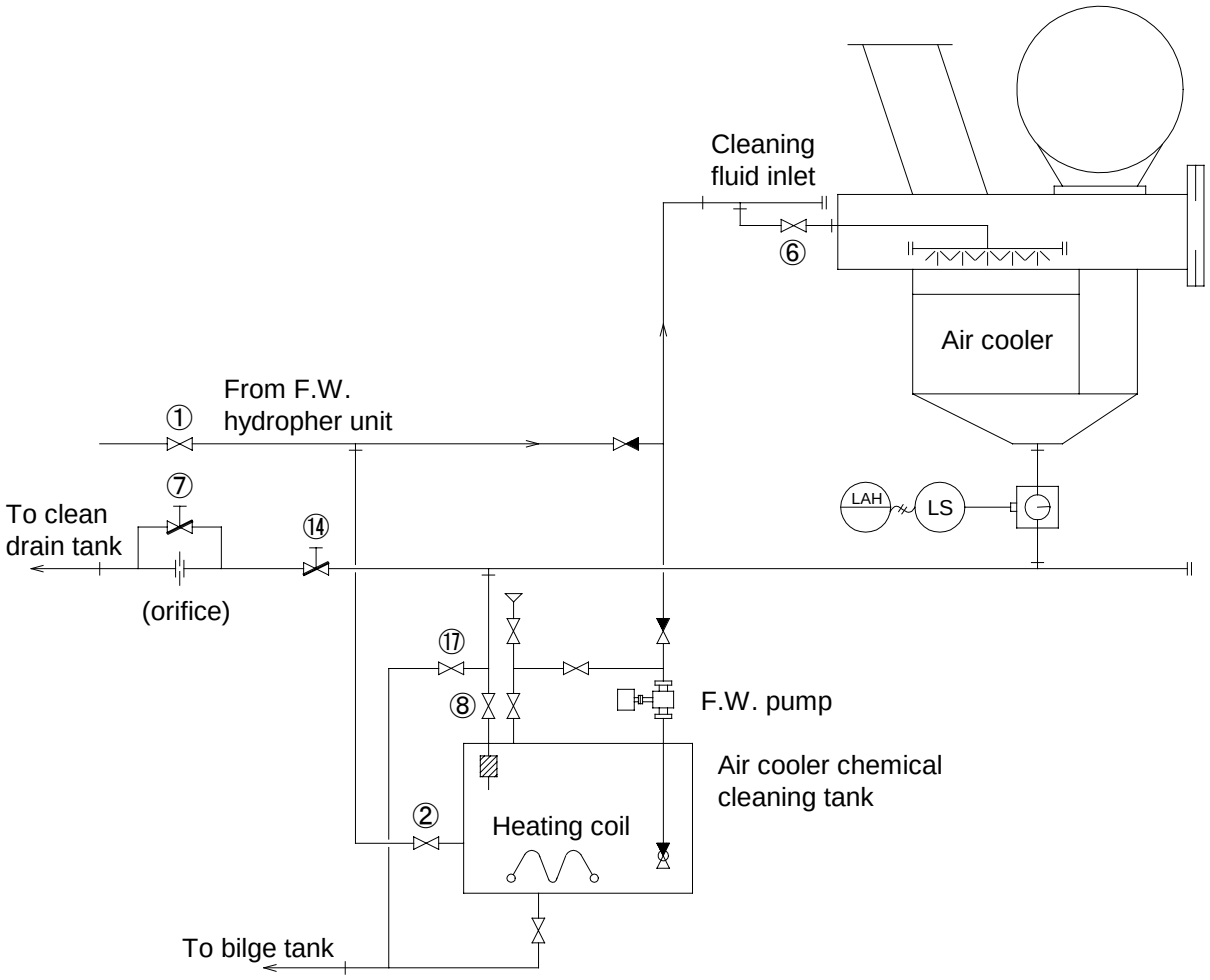

Fig. 1 Air cooler cleaning line
(with scavenging air drain water high level alarm,
without auto drain trap valve.)

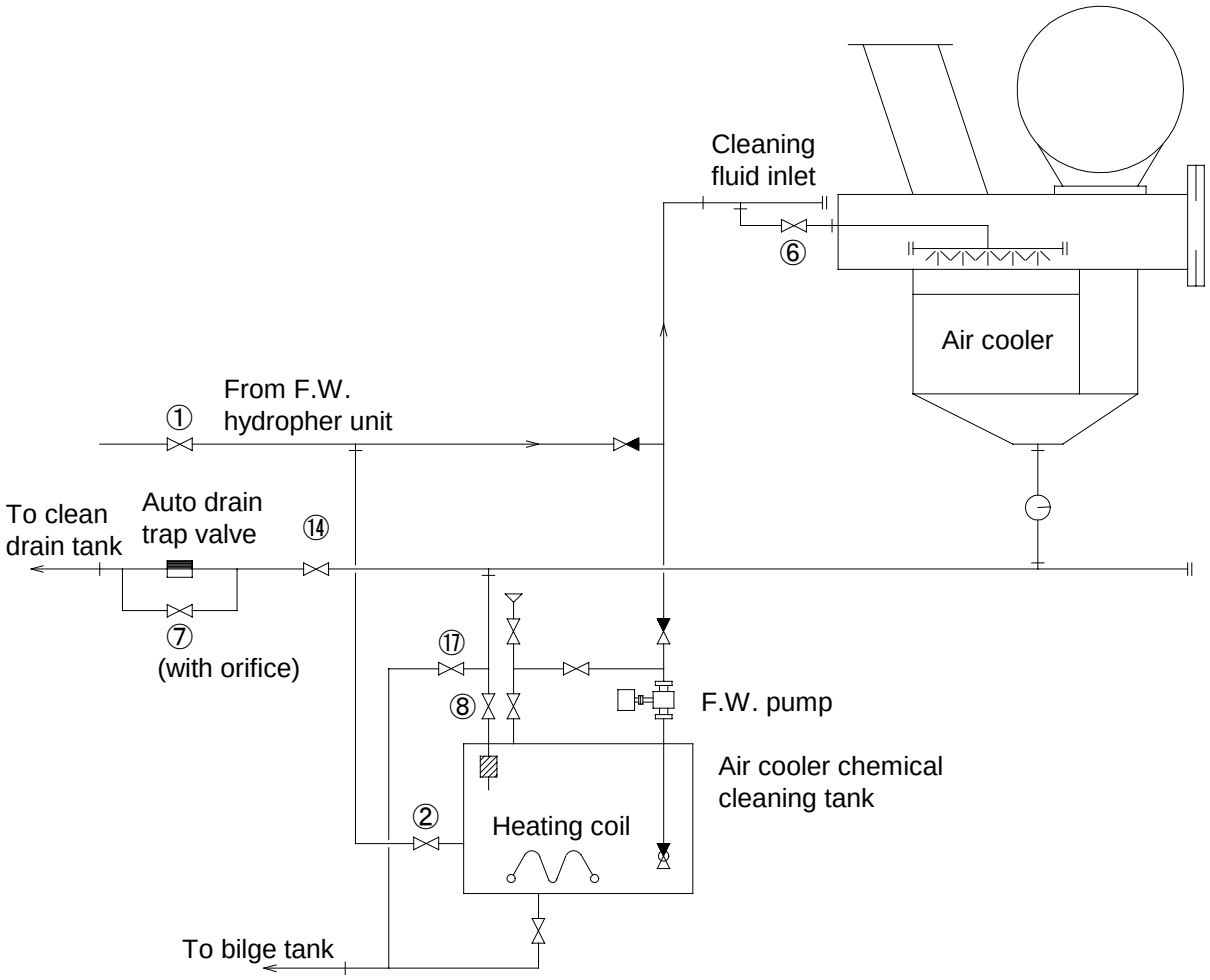

Fig. 2 Air cooler cleaning line
(with auto drain trap valve.)

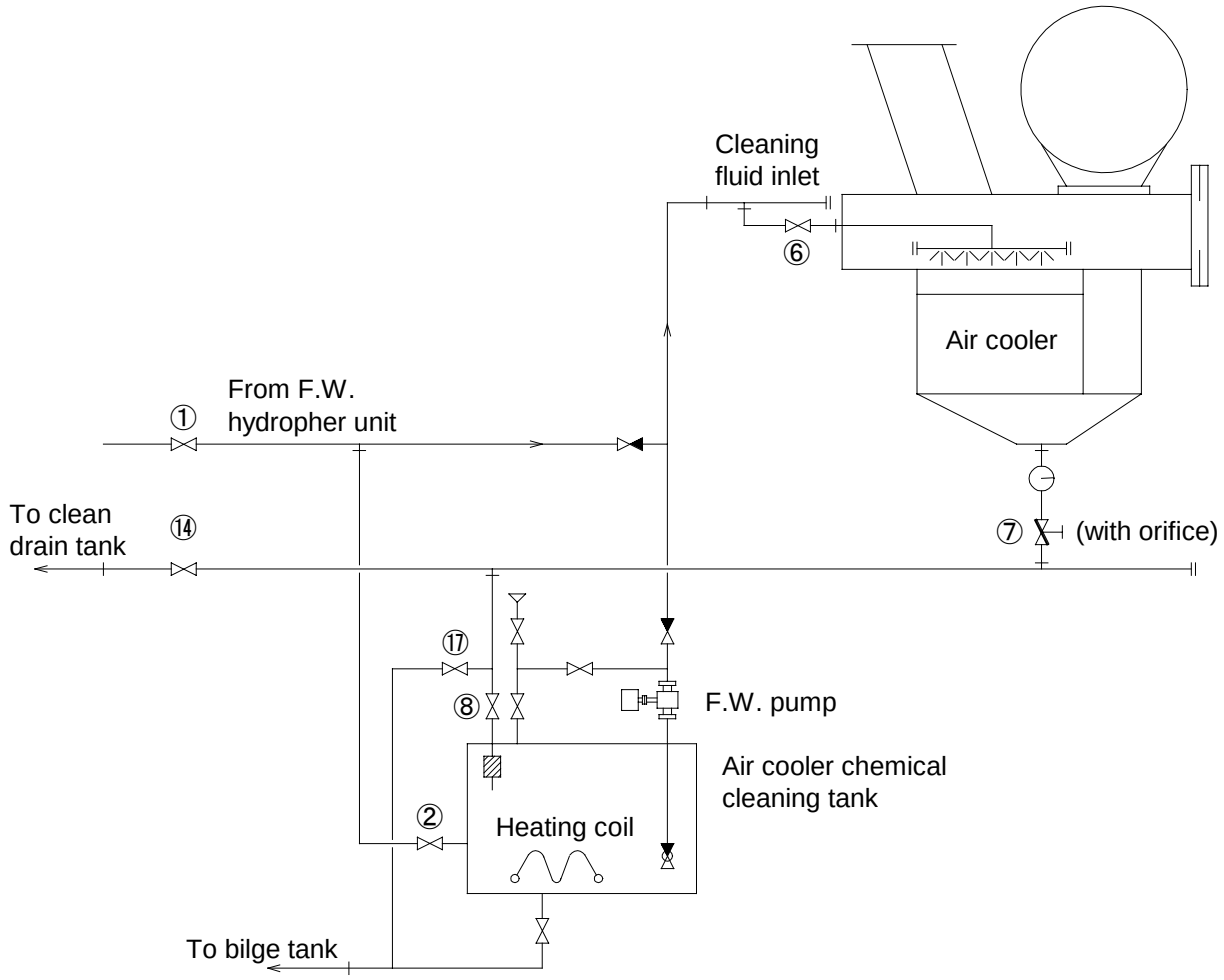

Fig. 3 Air cooler cleaning line
(without both scavenging air drain water high level alarm
and auto drain trap valve.)

701 SAFETY PRECAUTIONS AND ENGINE DATA

702 CHECKS DURING STANDSTILL PERIODS

703 STARTING, MANOEUVRING AND RUNNING

704 SPECIAL RUNNING CONDITINS

705 FUEL AND FUEL TREATMENT

706 PERFORMANCE EVALUATION & GENERAL OPERATION

707 CYLINDER CONDITION

708 BEARING AND CIRCULATING OIL

709 WATER COOLING SYSTEM

710 DATA

Chapter 707
Cylinder Condition

Contents Page

Cylinder Condition

1. General 707-03
2. Piston Ring Function 707-03
3. Scavenging Port Inspection 707-03
   - 3.1 General 707-03
   - 3.2 Procedure 707-04
   - 3.3 Observations 707-05
   - 3.4 Replacement of Piston Rings 707-08
4. Cylinder Overhaul 707-08
   - 4.1 Intervals between Piston Pulling 707-09
   - 4.2 Initial Inspection and Removal of the Rings 707-09
   - 4.3 Cleaning 707-09
   - 4.4 Measurement of Ring Wear 707-10
   - 4.5 Inspection of Cylinder Liner 707-10
   - 4.6 Piston Skirt, Crown and Cooling Space 707-11
   - 4.7 Piston Ring Grooves 707-12
   - 4.8 Renovating the Running Surfaces of Liner and Skirt 707-12
   - 4.9 Piston Ring Gap 707-12
   - 4.10 Fitting of Piston Rings 707-12
   - 4.11 Piston Ring Clearance 707-12
   - 4.12 Cylinder Lubrication and Mounting 707-13
   - 4.13 Running-in of Liners and Rings 707-13
5. Factors Influencing Cylinder Wear 707-13
   - 5.1 General 707-13
   - 5.2 Materials 707-13
   - 5.3 Cylinder Oil 707-13
   - 5.4 Corrosive Wear 707-14
   - 5.5 Abrasive Wear 707-15
6. Propeller Performance 707-17

Contents Page

Cylinder Lubrication

1. Lubricators 707-18
2. Cylinder Oil Film 707-18
3. Cylinder Oils 707-19
   - 3.1 Relation between sulphur content in fuel oil and TBN of cylinder oil 707-19
4. Cylinder Oil Feed Rate (dosage) 707-20
   - 4.1 General 707-20
   - 4.2 BASIC SETTING 707-20
   - 4.3 Calculating the Feed Rate at Specified MCR 707-21
   - 4.4 Recalculating of the Feed Rate at Part Load 707-21
   - 4.5 Guidance Schedule of Cylinder Oil Feed Rate Adjustment 707-23
   - 4.6 Special Conditions 707-24
   - 4.7 Calculating the Pump Stroke and Cylinder Oil Consumption of the Mechanical type Lubricator 707-25
   - 4.8 Calculating the Cylinder Oil Consumption of the Alpha Lubricator System 707-26

Plates

Inspection through Scavenge Ports 70701 - 70705
Factors influencing Cylinder Wear 70706
Abrasive Particles 70707 - 70709
Guidance Schedule of Cylinder Oil Feed Rate Adjustment (with Mechanical type lubricators) 70710A - B
Guidance Schedule of Cylinder Oil Feed Rate Adjustment (with Alpha Lubricator System) 70710C - D
Cylinder Condition Report 70711
Calculating of Condensate Amount 70713A - B
Breaking-in Load 70714

Cylinder Condition

1. General

△ To obtain and maintain a good cylinder condition involves the optimisation of many factors.
Since most of these factors can change during the service period - and can be influenced by service parameters within the control of the engine room staff - it is of great importance that running conditions and developments are followed as closely as possible.

By means of continual monitoring it is normally possible to quickly discover abnormalities, whereby countermeasures can be taken at an early stage.
In particular, it is advisable to regularly check the cylinder condition by means of inspection through the scavenge ports - especially concentrating on the piston ring condition.

2. Piston Ring Function

The function of the piston ring is to give a gas-tight sealing of the clearance between the piston and cylinder liner.
This seal is brought about by the gas pressure above and behind the piston ring, which forces it downwards, against the bottom of the ring groove, and outwards against the cylinder wall.
In order to ensure optimum sealing, it is therefore important that the piston rings, the grooves, and the cylinder walls, are of proper shape, and that the rings can move freely in the grooves (since the piston will also make small horizontal movements during the stroke).

The lubrication of the piston rings influences the sealing as well as the wear.

Experience has shown that unsatisfactory piston ring function is probably one of the main factors contributing to poor cylinder condition.
For this reason, regular scavenge port observations are strongly recommended as a means of judging how conditions are progressing.

3. Scavenging Port Inspection

3.1 General

Regarding intervals between scavenge port inspection, see the instruction book "MAINTENANCE", Chapter 900, "Checking and Maintenance Program".

This inspection provides useful information about the condition of cylinders, pistons and rings, at low expense.
The inspection consists of visually examining the piston, the rings and the lower part of the cylinder liner, directly through the scavenge air ports.

⚠ To reduce the risk of scavenging box fire, remove any oil sludge and carbon deposits in the scavenge air box and receiver in connection with the inspection.

The port inspection should be carried out at the first stop after a long voyage, e.g. by anchoring if possible, to obtain the most reliable result with regard to the effectiveness and sufficiency of the cylinder lubrication and the combustion cycle (complete or incomplete).

A misleading result may be obtained if the port inspection is carried out after arrival at harbour, since manoeuvring to the quay and low-load running, e.g. river or canal passage, requires increased cylinder oil dosage, i.e. the cylinders are excessively lubricated.
Further, during low load, the combustion cycle might not be as effective and complete as expected, due to the actual fuel oil qualities and service (running) condition of the fuel injection equipment.
Therefore, it is highly recommended to take this information into consideration.

3.2 Procedure

Scavenge port inspections are best carried out by two men, the most experienced of whom inspects the surfaces, and states his observations to an assistant, who records them.
The assistant also operates the turning gear.

⚠ **WARNING**
When turning is carried out, prepare to be able to stop it in any case.

Keep the cooling water and cooling oil circulating, so that possible leakages can be detected.

Block the starting air supply to the main starting valve.
Open the indicator valves.
Engage the turning gear.

Remove the inspection covers on the camshaft side of the cylinder frame, and clean the openings.
Remove the cover(s) on the scavenge air receiver.

⚠ **WARNING**
Do not enter the scavenge air receiver before it has been thoroughly ventilated.

Begin the inspection at the cylinder whose piston is nearest BDC.

- Inspect the piston, rings, and cylinder wall.
  Wipe the running surfaces clean with a rag to ensure correct assessment of the piston ring condition.
  Use a powerful lamp to obtain a true impression of the details.

⚠ WARNING
Before wiping the running surfaces, turning should be stopped.

- Regarding the sequence, see *Plate 70701*.
  Regarding description of the conditions, see Item 3.3, point A) to H).

- Record the results on *Plate 70702*.

- Use the symbol shown on Plate 70703 to ensure easy interpretation of the observations.

- Keep the records to form a "log book" of the cylinder condition.

Continue the inspection at the next cylinder whose piston is nearest BDC, and so on.
Note down the order of inspection for use at later inspection.

Check the non-return valves (flap valves/butterfly valves) in the auxiliary blower system for easy movement and possible damage.

Remove any oil sludge and carbon deposits in the scavenge air boxes and receiver.
Record the observations on *Plate 70702*.

3.3 Observations

A) Piston Rings: In Good Condition

When good and steady service conditions have been achieved, the running surfaces of the piston rings and cylinder liner will be worn bright (this also applying to the ring undersides and the "floor" of the ring grooves, which, however, cannot be seen).
In addition, the rings will move freely in the grooves and also be well oiled, intact, and not unduly worn.
The ring edges will be sharp when the original roundings have been worn away, but should be without burrs.

B) Piston Rings: Micro-seizure (*Plates 70704* and *70705.*)

If, over a period of time, the oil film partially disappears, so that dry areas are formed on the cylinder wall, these areas and the piston ring surfaces will, by frictional interaction, become finely scuffed and hardened, i.e. the good "mirror surface" will have deteriorated.

In case of extensive seizures, sharp burrs may form on the edges of the piston rings.

A seized surface, which has characteristic vertically-striped appearance, will be relatively hard, and may cause excessive cylinder wear.

Due to this hardness, the damaged areas will only slowly disappear (run-in again) if and when the oil film is restored.
As long as the seizure is allowed to continue, the local wear will tend to be excessive.

Seizure may initially be limited to part of the ring circumference, but, since the rings are free to "turn" in their grooves, it may eventually spread over the entire running face of the ring.
The fact that the rings move in their grooves will also tend to transmit the local seizure all the way around the liner surface.

If seizures have been observed, then it is recommended that the cylinder oil dosage is temporarily increased.
See Item 4.12, and the "Cylinder Lubrication" section.

C) Piston rings: Scratched (*Plates 70704, 70705*)

Scratching is caused by hard abrasive particles originating from the ring itself, or usually, from the fuel oil.
As regards liner and ring wear, the scratching is not always serious, but the particles can have serious consequences elsewhere.
See point 5.5 covering "Abrasive Wear".

D) Piston Rings: Sticking

If, due to thick and hard deposits of carbon, the piston rings cannot move freely in their grooves, dark areas will often appear on the upper part of the cylinder wall (may not be visible at port inspection).
This indicates lack of sealing, i.e. combustion gas blow-by between piston rings and cylinder liner.

The blow-by will promote oil film break-down, which in turn will increase cylinder wear.
Sticking piston rings will often lead to broken piston rings.

The free movement of the rings in the grooves is essential, and can be checked either by pressing them with a wooden stick (through the scavenge ports) or by turning the engine alternately ahead and astern, to check the free vertical movement.

E) Piston rings: Breakage/Collapse

Broken piston rings manifest themselves during the scavenge port inspection by:

– Lack of "elastic tension", when the rings are pressed into the groove by means of a stick
– Blackish appearance
– Fractured rings
– Missing rings

Piston ring breakage is mostly caused by a phenomenon known as "collapse".
However, breakage may also occur due to continual striking against wear ridges, or other irregularities in the cylinder wall.

Collapse occurs if the gas pressure behind the ring is built up too slowly, and thereby exerts an inadequate outward pressure.
In such a case, the combustion gas can penetrate between the liner and ring, and violently force the ring inwards, in the groove.
This type of sudden "shock" loading will eventually lead to fracture - particularly if the ring ends "slam" against each other.

The above-mentioned slow pressure build-up behind the rings can be due to:

– carbon deposits in the ring groove,
– too small vertical ring clearance,
– partial sticking,
– poor sealing between the ring and the groove floor,
– "clover-leafing" (see below)
– ring-end chamfers (see below),
– too large ring-edge radii,

"Clover-leafing" is a term used to describe longitudinal corrosive wear at several separate points around the liner circumference - i.e. in some cases the liner bore may assume a "clover-leaf" shape, see Item 5.4 D).

Chamfering at the ring ends is unnecessary and detrimental in MC(-C) engines, as the scavenge ports are dimensioned to avoid "catching" the ring ends.

F) Piston Rings: Blow-by

Leakage of combustion gas past the piston rings (blow-by) is a natural consequence of sticking, collapse or breakage. See points D) and E).
In the later stages, when blow-by becomes persistent, it is usually due to advanced ring breakage, caused by collapse.

Blow-by is indicated by black, dry areas on the rings and also by larger black dry zones on the upper part of the liner wall which, however, can only be seen when overhauling the piston (or when exchanging the exhaust valve).

See also Chapter 704 "Running with Cylinders or Turbochargers out of Operation", Item 2, Case A) and Chapter 706 "Evaluation of Records", Item 2.2.

G) Deposits on Pistons (*Plate 70703*)

Usually some deposits will have accumulated on the side of the piston crown (top land).
Carbon deposits on the ring lands indicate lack of gas sealing at the respective rings.

If the deposits are abnormally thick, their surfaces may be smooth and shiny from rubbing against the cylinder wall.
Such contact may locally wipe away the oil film, resulting in micro-seizure and increased wear of liner and rings.

In some instances, "mechanical clover-leafing" can occur, i.e. vertical grooves of slightly higher wear in between the lubricating bores.
Such conditions may also be the result of a combustion condition which overheats the cylinder oil film.
This could be due to faulty or defective fuel nozzles or insufficient turbocharger efficiency.

H) Lubricating Condition

Note whether the "oil film" on the cylinder wall and piston rings appears to be adequate.
All piston rings should show oil at the edges. However, see also Item 3.1.

White or brownish coloured areas may sometimes be seen on the liner surface.
This indicates corrosive wear, usually from sulphuric acid (see also Item 5.4), and should not be confused with grey-black areas, which indicates blow-by.
In such cases it should be decided whether, in order to stop such corrosive attack, a higher oil dosage, or an oil with higher alkalinity should be introduced.

See Item 5.4 and the "Cylinder Lubrication" section.

3.4 Replacement of Piston Rings

It is recommended that the complete set of piston rings is replaced at each piston overhaul, to ensure that the rings always work under the optimum service conditions, thereby giving the best ring performance.
See the instruction book “MAINTENANCE”, Chapter 902.

4. Cylinder Overhaul

To ensure correct recording of all relevant information, it is recommended that *Plate 70711*, "Cylinder Condition Report" is used.

4.1 Intervals between Piston Pulling

Regarding guiding, average intervals, see the instruction book "MAINTENANCE", Chapter 900, "Checking and Maintenance Program".

Base the actual intervals between piston overhauls on the previous wear measurements and observations from scavenge port inspections, supplemented with the pressures read from indicator cards.

Regarding procedures for the dismantling and mounting of pistons, see the instruction book "MAINTENANCE", Chapter 902.

⚠ Before the piston is lifted, remove the PC (Piston Cleaning) ring (if installed), and carefully remove any coke deposits and wear ridges from the upper part of the liner.

4.2 Initial Inspection and Removal of the Rings

Before any cleaning, inspect the piston and liner, as described in Item 3.3, A) to H).

Measure the free ring gap and compare to that of a new ring, whereby the loss of tension can be calculated.
Note down the measurements on *Plate 70711*.

Remove the piston rings.

⚠ Use only the standard ring opener for all mounting and removal of piston rings.

This opener prevents local overstressing of the ring material which, in turn, would often result in permanent deformation, causing blow-by and broken rings.
Straps to expand the ring gap, or tools working on the same principle, should never be used.

It is extremely important that the piston rings are removed by means of the special ring opener, if they are to be reinstalled after inspection.
However, it is recommended to replace the complete set of piston rings at each overhaul, see Item 3.4.

4.3 Cleaning

Clean the piston rings.
Clean all ring grooves carefully.
If carbon deposits remain, they may prevent the ring from forming a perfect seal against the floor of the groove.

Remove deposits on the piston crown and ring lands.
Remove any remaining coke deposits from the upper section of the liner.
Remove any coke in the scavenge air ports.

4.4 Measurement of Ring Wear (*Plate 70711*)

Measure and record the radial width and the height of the rings.

Compare the measured wear to the wear tolerances stated in the instruction book "MAINTENANCE", Chapter 902.
When this value has been reached, scrap the ring.

As it is recommended to replace the complete set of piston rings at each overhaul, use these measurements to form the basis for deciding optimal overhaul intervals, see Item 4.1.

4.5 Inspection of Cylinder Liner (*Plate 70711*)

Cylinder Wear Measurements:

Before measuring the cylinder wear:
- ensure that the tool and cylinder liner temperatures are close to each other.
- record the tool and cylinder liner temperatures on *Plate 70711* to enable correction.

Measure the wear with the special tool at the vertical positions marked on the tool.
Measure in both the transverse and longitudinal directions.
This ensures that the wear is always measured at the same positions.
See the instruction book "MAINTENANCE", Procedure 903-2.

Record the measurements on *Plate 70711*.

Correction of wear measurements:

Correct the actual wear measurements by multiplying with the following factors, if the temperature of the cylinder liner is higher than the temperature of the tool.
This enables a comparison to be made with earlier wear measurements.

Δt °C	Factor
10	0.99988
20	0.99976
30	0.99964
40	0.99952
50	0.99940

Example : (for 90MC)

Measured value	:	901.3 mm
Δ t measured	:	30 °C
Corrected value	:	901.3 × 0.99964 = 900.98 mm
i.e. a reduction of	:	901.3 – 900.98 = 0.32 mm

Maximum Wear:

The maximum wear of cylinder liners can be in the interval of 0.4 to 0.8% of the nominal diameter, depending on the actual cylinder and piston ring performance.

Ovality of the liner, for instance, may form a too troublesome basis for maintaining satisfactory service condition, in which case the cylinder liner in question should be replaced.

Checking Liner Surface:

Inspect the liner wall for scratches, micro-seizure, wear ridges, collapse marks, corrosive wear, etc.

If corrosive wear is suspected or if a ring is found broken, take extra wear measurements around the circumference at the upper part of the liner:
– Press a new piston ring into the cylinder.
– Use a feeler gauge to check for local clearances between the ring and liner.

This can reveal any "uneven" corrosive wear.
See Item 3.3 E), H) and 5.4.

4.6 Piston Skirts, Crown and Cooling Space (*Plate 70711*)

Clean and check the piston skirt for seizures and burrs.
In case of seizures, grind over the surface to remove a possible hardened layer.

Check the shape of piston crown by means of the template.
Measure any burnings.
If in any place the burning/corrosion exceeds the maximum permissible, send the piston crown for reconditioning.
Regarding maximum permissible burning, see the instruction book "MAINTENANCE", Procedure 902-3.

Inspect the crown for cracks.
Pressure-test the piston assembly to check for possible oil leakages, see the instruction book "MAINTENANCE", Procedure 902-4.3.

If the piston is taken apart, for instance due to oil leakage, check the condition of the joints between the crown, the piston rod, and the skirt.
Inspect the cooling space and clean off any carbon/coke deposits.

Replace the O-rings.
Check that the surfaces of the O-ring grooves are smooth.
This is to prevent twisting and breakage of the O-rings.

⚠ Pressure-test the piston after assembling.

4.7 Piston Ring Grooves (*Plate 70711*)

Check the piston ring grooves as described in the instruction book "MAINTENANCE", Procedure 902-3.
If the ring groove wear exceeds the values stated in the instruction book, send the crown for reconditioning (new chrome-plating).

4.8 Renovating the Running Surfaces of Liner and Skirt

If there are micro-seized areas on the liner or skirt, scratch-over manually with coarse carborundum stone (grindstone), moving the grindstone crosswise, at an angle of 20 to 30 degrees to horizontal.
This is done to break up the hard surface glaze.
Leave the "scratching marks" as coarse as possible.
It is not necessary to completely remove all signs of "vertical stripes" (micro-seizure).

If there are horizontal wear ridges in the cylinder liner - e.g. at the top or bottom where the rings "turn": smoothen out carefully with a portable grinding machine.

4.9 Piston Ring Gap (New Rings)

As the piston rings work at a somewhat higher temperature than the liner, it is important that they have a gap which is sufficient to permit the extra thermal expansion.

Place the ring in the special tool (guide ring) which is used when mounting the piston in the cylinder liner.
The upper part of a clean, new liner (above the ring travel) can also be used.

Check the gap described in the instruction book "MAINTENANCE", Procedure 902-3.

4.10 Fitting of Piston Rings

Fit the piston rings. See also Item 3.4.
Push the ring back and forth in the groove to make sure that it moves freely.
Use only the standard piston ring opener. See also Item 4.2.

4.11 Piston Ring Clearance

When the rings are in place, check and record the vertical clearance between ring and ring groove.
Furthermore, insert a feeler gauge of the thickness specified in the instruction book "MAINTENANCE", Chapter 902, and move it all the way round the groove both above and below each piston ring.
Its free movement will confirm the clearances as well as proper cleanliness.

4.12 Cylinder Lubrication and Mounting

Check the cylinder lubrication:
Pre-lubricate the lubricators and check that the pipes and joints are leak-proof, and that oil flows out from each lubricating bores.

If any of the above-mentioned inspection points have indicated that the cylinder oil amount should be increased, or decreased, refer followings:

– For adjusting the cylinder lubricators; the instruction book "COMPONENT DESCRIPITION (ACCESSORIES)"
– For adjusting the cylinder oil dosage; the “INSTRUCTION MANUAL FOR ADJUSTMENT & MEASUREMENT” of this instruction book and "Cylinder Lubrication", Item 4.

Coat the piston with clean oil.
Before mounting the overhauled piston, remove any remaining deposits from the upper end of the liner.
Mount the piston.
See the instruction book "MAINTENANCE", Procedure 902-2.2.

4.13 Running-in of Liners and Rings

After recondition or renewal of cylinder liners and/or piston rings, allowance must be made for a running-in period, see “Cylinder Lubrication”, Item 4.

5. Factors Influencing Cylinder Wear

5.1 General

Plate 70706 gives a summary of the most common causes of cylinder wear.
The following gives a brief explanation of the most important aspects, and of the precautions to be taken to counteract them.

5.2 Materials

△ Check that the combination of piston ring and cylinder liner materials complies with the engine builder’s recommendations.

5.3 Cylinder Oil

Check that the quality and feed rate are in accordance with the recommendations, see "Cylinder Lubrication".

5.4 Corrosive Wear

A) The Influence of Sulphur in the Fuel

Corrosive wear is caused by condensation and the formation of sulphuric acid on the cylinder wall.
In order to minimise condensation, the MC(-C) engines design incorporates optimised temperature level of the liner wall, based on actual engine layout.
If corrosion arises even so, insulation of the liner and/or insulated steel pipes in the cooling bores can be arranged.

To reduce the risk of corrosion attack:

– Keep the cooling water outlet temperatures within the specified interval, see Chapter 703, Appendix.
– Keep the temperature difference across the cylinder units between 10 ~ 18 °C at MCR.
– Use alkaline cylinder lubricating oils, see also Item 5.3.
– Preheat the engine before starting, as described in Chapter 703.
– Check that the drain from the water mist catcher functions properly, to prevent water droplets from entering the cylinders, see also Item 5.4D).

It is important that any corrosion tendency is ascertained as soon as possible.

If corrosion is prevailing:
- Check the cylinder feed rate, see Item 5.3.
- Increase the feed rate as described in "Cylinder Lubrication", Item 4.6.
- Check the alkalinity, see Item 5.3.
- Check the timing.
- Check the cooling water temperatures and the drain from the water mist catcher, as described above.
  The amount of condensate can be read from *Plate 70713*, see also Item 5.4 D).

In case of too small cylinder oil feed rate or too low alkalinity, the alkaline additives may be neutralised too quickly or unevenly, during the circumferential distribution of the oil across the liner wall.
This systematic variation in alkalinity may produce "uneven" corrosive wear on the liner wall, see points 3.3 E) and 5.4 D), regarding "clover-leafing"

B) Sodium Chloride

Seawater (or salt) in the intake air, fuel, or cylinder oils, will involve the risk of corrosive cylinder wear.

To prevent salt water entering the cylinder, via the fuel and cylinder oil:
– maintain the various oil tanks leak-proof.
– centrifuge the fuel carefully.
– do not use the bunker tanks for ballast water.

C) Cleaning Agents (Air Cooler)

The air side of the scavenge air coolers can be cleaned by means of cleaning agents dissolved in fresh water (if the necessary equipment is installed).

Follow the supplier's instruction strictly for:
– the dosage of the agent
– the use of the cleaning system

After using chemical agents, flush with clean fresh water to remove the agent from the cooler and air ducts.

⚠ Cleaning of the air side of the air cooler must only be carried out during engine standstill.
The use of chemical cleaning agents during running involve, in spite of the water separator, the risk of partial removal of the oil from the cylinder liner wall.

See also Chapter 706, "Cleaning of Turbochargers and Air Coolers", Item 3, and the instruction book "MAINTENANCE", Procedure 910-5.1.

D) Water Condensation on Air Cooler Tubes

Depending on the temperature and humidity of the ambient air and the temperature of the seawater, water may condense on the coldest air cooler tubes.
Water mist catchers are installed directly after the air coolers on all MC(-C) engines to prevent water droplets from being carried into the cylinders.

If water enters the cylinders, the oil film may be ruptured and cause wear (clover-leafing) on the liner surfaces between the cylinder lubricating oil inlets.
It is very important that the water catcher drains function properly.

See Chapter 706, "Cleaning of Turbochargers and Air Coolers", Item 3.
See also *Plate 70713* for amount of condensate.

5.5 Abrasive Wear (*Plates 70705, 70707, 70708* and *70709*)

A) Particles

Abrasive cylinder wear can be caused by hard particles which enter the cylinder via:

– The fuel oil, e.g. catalyst fines. See also Item 5.5 C).

  Particles in the fuel oil can also be caught in the fuel pump suction valve.
  If this occurs, the suction valve seats can very quickly become so heavily pitted (*Plate 70709*, photo 4) that they leak, causing a reduction of the maximum pressure and an increase of the fuel index.

The occurrence of the particles is unpredictable.
Therefore, clean the fuel oil as thoroughly as possible by centrifuging, in order to remove the abrasive particles.

– The air, e.g. sand.

Keep the turbocharger intake filter in a good condition.

Abrasive wear can occur on:

1. The running surfaces of the liner and piston rings.

   Scratching on the piston ring running surface is one of the first signs of abrasive particles, and can be observed during scavenge port inspections or piston overhauls.

   Scratching is often seen as a large number of rather deep "trumpet shaped" grooves (see *Plates 70705* and *70708*).

   Usually, micro-seizures do not occur, i.e. the ring surface remains soft, see *Pate 70704*.

2. The upper and lower sides of the piston rings.

   Particles caught between the upper horizontal ring/groove surfaces will cause pitting - "pock-marks" - on the upper ring surface (*Plates 70707* and *70708*).
   "Pock-marks" may also arise during a prolonged period of ring collapse.

   Even if the running surface of the top ring has a satisfactory appearance, the condition of the ring's upper surface, (and of the suction valve seats) will reveal the presence of abrasive particles.

3. The upper edge of the piston ring.

   When particles pass down the ring land, via the ring joint gaps, they will cause a "sand blasting" effect on the upper edge of the ring below which protrudes from the piston ring groove, i.e. this is only seen on ring Nos. 2, 3, and 4.

B) Scuffing (micro-seizure)

Abrasive wear may be the result of scuffing (micro-seizure).

Apart from the factors mentioned under Item 3.3 (blow-by, deposits, cylinder oil deficiencies, etc.), scuffing can be due to:

– unsatisfactory running-in conditions (especially if a previous micro-seizure has not been successfully counteracted during a cylinder overhaul).
  As regards running-in, see “Cylinder Lubrication”, Item 4.5.
– misalignment (including machining errors).

C) Fuel oil treatment

Correct fuel oil treatment and proper maintenance of the centrifuges are of the utmost importance for cylinder condition, exhaust valves and fuel injection equipment. See also Chapter 705.

Water and abrasive particles are removed by means of the centrifuges:

1. The ability to separate water depends largely on the specific gravity of the fuel oil relative to the water - at the separation temperature.
   Other influencing factors are the fuel oil viscosity (at separation temperature) and the flow rate.

   Keep the separation temperature as high as possible, for instance:
   95 ~ 98 °C for fuel oil with a viscosity of 380 mm^2/s at 50 °C.

2. The ability to separate abrasive particles depends upon the size and specific weight of the smallest impurities that are to be removed and, in particular, on the fuel oil viscosity (at separation temperature) and the flow rate through the centrifuge.

   Keep the flow rate as low as possible.

6. Propeller Performance

As indicated in Chapter 706, "Observation during Operation", Item 2, special severe weather condition can cause a change to heavy propeller running.
In cases where the power / speed combination has moved too much to the left in the load diagram (beyond line ④ illustrated in *Plate 70601*, *70602*), continued service may cause thermal overload of the components in the combustion chamber and thereby create heat cracks.

Cylinder Lubrication

1. Lubricators

The cylinder lubricator system is either the Mechanical type lubricator or the Alpha lubricator system (Option).

Each cylinder liner has a number of lubricating bores, through which oil is introduced from the cylinder lubricators, as outlined in the instruction book "COMPONENT DESCRIPITION (CODE BOOK)", also see the instruction book "COMPONENT DESCRIPITION (ACCESSORIES)".

The oil is injected into the cylinder via non-return valves when the piston rings pass the lubricating bores, during the upward stroke.

For check of functioning, see Chapter 702, Check 4.5.

The lubricators are equipped with a sensor for non-flow.

2. Cylinder Oil Film

If a satisfactory cylinder condition is to be achieved, it is of vital importance that the oil film is intact.
Therefore, the following conditions must be fulfilled:

a) The cylinder lubricators must be correctly timed (for the Mechanical type lubricator)
See the instruction book "MAINTENANCE", Chapter 903.

b) The cylinder oil type and TBN must be selected in accordance with the fuel being burned. See Item 3.

c) New liners and piston rings must be carefully run-in. See Item 4.5.

d) The cylinder oil feed rate under normal service must be in accordance with the engine builder’s recommendations.
Furthermore, the cylinder oil feed rate must be adjusted in accordance with the service experience for the actual trade obtained from the scavenge port inspection.

e) The cylinder oil feed rate must be increased in the situations described in Item 4.6.

f) In case of Mechanical cylinder lubricator with the heater, turn it on if the engine room temperature is below 30 °C.

3. Cylinder Oils

Cylinder oil should be of the SAE 50 viscosity grade.

The table below indicates international brands of oils that have given satisfactory results when applied in MC(-C) engines (heavy fuel operation). Further information can be obtained by contacting the engine builder or the oil supplier.

Company	Cylinder oil SAE 50, TBN 70
BP CASTROL	ENERGOL CLO 50M CYLTECH 70 CYLTECH 80 AW
CHEVRON CALTEX	TARO SPECIAL HT70 SUPER DCL SPECIAL
EXXON MOBIL	MOBIL GUARD 570 EXXMAR X70
TOTAL	TALUSIA HR70
SHELL	ALEXIA OIL 50
NIPPON OIL	MARINE C705 FUKKOL MARINE CYLINDER 5070 FUKKOL MARINE CYLINDER 5080
IDEMITSU KOSAN	DAPHNE SEAMASTER A50(N)
COSMO OIL LUBRICANTS	COSMO MARINE 5070

3.1 Relation between sulphur content in fuel oil and TBN of cylinder oil

Fuel oil with less than 1.5 wt% of sulphur content is called low-sulphur fuel oil.

Generally, cylinder oil with less than TBN 40~50 is used for low-sulphur fuel oil (less than 1.5 wt%), and cylinder oil with TBN 70 is used for high-sulphur fuel oil.
Considering service experience, however, it has been confirmed that use of cylinder oil with TBN70 for low-sulphur fuel oil has caused few problems except for cases of excessive dosage of cylinder oil.
Therefore, it is acceptable to use cylinder oil with TBN 70 for low-sulphur fuel oil.

It has been reported, however, some cylinder oils with high TBN are not compatible with certain low-sulphur fuels or some diesel oils, and something is wrong with the cylinder condition.
If such deterioration of the cylinder condition is happened, the relation between dosage and alkalinity of cylinder oil should be taken consideration, i.e., the dosage of cylinder oil may have to be reduced.
However, reducing fuel oil dosage may not cope with very lower sulphur fuel oil (e.g. 0.5 wt%).
In this case, it is recommended to change the cylinder oil with lower TBN (e.g. TBN 40)

4. Cylinder Oil Feed Rate (dosage)

⚠ Adjust the feed rate for specific engine in accordance with “INSTRUCTION MANUAL FOR ADJUSTMENT & MEASUREMENT” of this instruction book.

4.1 General

The following guidelines are based on service experience, and take into consideration the specific design criteria of the MC(-C) engines (such as mean pressure, maximum pressure, and lubricated liner area) as well as today's fuel qualities and operating conditions.

The recommendations are valid for fixed pitch and controllable pitch propeller plants.

Regarding adjustment and operation of the lubricators, see the instruction book “COMPONENT DESCRIPTION (ACCESSORIES)”.

4.2 BASIC SETTING

The cylinder oil feed rate shown in below tables are only for guidance and are not guaranteed.

For the Mechanical type lubricator

	S-MC(-C) engines	L-MC(-C) engines K-MC(-C) engines
BASIC SETTING	1.5 g/kW-h	1.2 g/kW-h
Min. Feed Rate	0.95 g/kW-h	0.8 g/kW-h

For the Alpha lubricator system

S-MC(-C) engines

	Cylinder bore 70cm and larger engines	Cylinder bore 60cm and smaller engines
BASIC SETTING	1.4 g/kW-h	1.1 g/kW-h
Min. Feed Rate	0.8 g/kW-h	0.8 g/kW-h

L-MC(-C), K-MC(-C) engines

BASIC SETTING	1.1 g/kW-h
Min. Feed Rate	0.8 g/kW-h

Use these values for calculating the cylinder oil amount equivalent to BASIC SETTING and Min. Feed Rate at specified MCR, see Item 4.3.

4.3 Calculating the Feed Rate at Specified MCR

The specific cylinder oil consumption [liter/day-cyl.] at specified MCR can be calculated as follows:

$$Q_{MCR} = BS \times \frac{OUTPUT_{MCR}}{C} \times \frac{24}{\rho \times 1000}$$

where

Q_{MCR}	:	Specific cylinder oil consumption at specified MCR	[liter/day-cyl.]
BS	:	BASIC SETTING, see Item 4.2.	[g/kW-h]
ρ	:	specific density (guidance value; 0.92)	[kg/liter]
C	:	number of engine cylinders	
$OUTPUT_{MCR}$	:	engine output at specified MCR	[kW]

4.4 Recalculating of the Feed Rate at Part Load

As the above mentioned specific cylinder oil consumption are based on specified MCR, before evaluating part load lube oil consumption, the actual dosage should be recalculated to what it would have been at specified MCR.

For the Mechanical type lubricator

The cylinder oil feed rate at part load will normally be decreased in proportion to the ratio between speed at part load and at specified MCR (SPEED dependent regulation).

SPEED dependent regulation:

$$Q_{part} = Q_{MCR} \times \frac{SPEED_{part}}{SPEED_{MCR}}$$

where

Q_{part}	:	cylinder oil feed rate at part load	[liter/day-cyl.]
$SPEED_{part}$	:	engine speed at part load	[min^{-1}]
$SPEED_{MCR}$	:	engine speed at specified MCR	[min^{-1}]

In case the MEP dependent cylinder lubrication system is mounted (Option), the cylinder oil feed rate at part load will automatically be decreased in proportion to the ratio between mean effective pressure at part load and at specified MCR (MEP dependent regulation).
The MEP dependent regulation performed by this system is available in the range of 40~100% MEP.

For the engine without this system, the cylinder oil feed rate running on part load for long period (low load operation) can also be adjusted manually as same procedure.

⚠ The feed rate of low load operation should not be below 40% of rate for specified MCR.
Remember to adjust the feed rate to the nominal level, when low load operation is finished.

MEP dependent regulation:

$$Q_{part} = Q_{MCR} \times \frac{MEP_{part}}{MEP_{MCR}} \approx Q_{MCR} \times \left(\frac{SPPED_{part}}{SPEED_{MCR}} \right)^2$$

where

MEP_{part}	:	engine mep at part load	[MPa]
MEP_{MCR}	:	engine mep at specified MCR	[MPa]

For the Alpha lubricator system

The cylinder oil feed rate at part load will normally be decreased in proportion to the ratio between mean effective pressure at part load and at specified MCR (MEP dependent regulation mode).

Note that at following condition the MEP dependent regulation mode is automatically taken over to SPEED dependent regulation mode;
- Feed rate setting value on the HMI panel ≥ 120%
- MEP% / SPEED% ≤ 63% (63% of specified MCR speed on nominal propeller curve)

MEP dependent regulation:

$$Q_{part} = Q_{MCR} \times \frac{MEP_{part}}{MEP_{MCR}} = Q_{MCR} \times (MEP\%)$$

SPEED dependent regulation (after taken over from above):

$$Q_{part} = Q_{25\%MCR} \times \frac{SPEED_{part}}{SPEED_{25\%MCR}} = Q_{MCR} \times 0.25^{\frac{1}{3}} \times \frac{SPEED_{part}}{SPEED_{MCR}}$$

where

Q_{part}	:	cylinder oil feed rate at part load	[liter/day-cyl.]
$Q_{25\%MCR}$	:	cylinder oil feed rate at 25% MCR	[liter/day-cyl.]
MEP_{part}	:	engine mep at part load	[MPa]
MEP_{MCR}	:	engine mep at specified MCR	[MPa]
$MEP\%$	:	mep ratio between part load and specified MCR = (displayed value in the HMI panel) / 100	
$SPEED_{part}$	:	engine speed at part load	[min^{-1}]
$SPEED_{MCR}$	:	engine speed at specified MCR	[min^{-1}]
$SPEED_{25\%MCR}$	:	engine speed at 25% MCR	[min^{-1}]

4.5 Guidance Schedule of Cylinder Oil Feed Rate Adjustment

The guidance schedule of cylinder oil feed rate is described in *Plate 70710A~70710D*, in which the values are valid for specified MCR, see Item 4.4.

After recondition or renewal of cylinder liners and/or piston rings, allowance must be made for a breaking-in and running-in period.
In case for the running-in one or two cylinders, see also Item 4.5.2.

The actual feed rate and its period should be adjusted in accordance with the service experience for the actual trade obtained from the scavenge port inspection.

Before reduction toward lower feed rate, the scavenge port inspection should be carried out and it should be confirmed that the cylinder condition is good enough, see “Cylinder Condition”, Item 3.
After reducing the feed rate, the cylinder condition should be inspected at the next engine standstill condition.

⚠ In order to prevent the excessive wear of the cylinder liner and the piston ring, the sudden reduction of the feed rate is to be avoided at the initial breaking/running-in period.

Breaking-in period:

A breaking-in feed rate and its period can be adjusted as shown *Plate 70710A~70710D*.
The load on main engine during braking-in period should be increased carefully as *Plate 70714*.

Running-in period:

A running-in feed rate and its period can be adjusted as shown *Plate 70710A~70710D*.
Before reduction toward lower feed rate, the scavenge port inspection should be carried out and it should be confirmed that the cylinder condition is good enough.

Feed rate adjustment after running-in period:

After breaking/running-in period, in order to prevent the excessive cylinder oil dosage, appropriate cylinder oil feed rate adjustment is recommended.

Feed rate reduction toward Min. Feed Rate may be done in steps not exceeding 0.068 g/kW-h, at intervals of 600 hours.
Before reduction toward lower feed rate, the scavenge port inspection should be carried out and it should be confirmed that the cylinder condition is good enough.

Increase or decrease the feed rate during the continued service, based on the regular:
- scavenge port inspection, and
- piston/liner overhauls, see “Cylinder Condition”, Item 4.1.

See the instruction book "MAINTENANCE", Chapter 900.
See also Item 4.6.

4.5.1 Running-in Rings after a Piston Overhaul

Running-in new piston rings in already run-in liners;
the breaking-in and running-in feed rate and its period onto the corresponding cylinder should be followed the same pattern as when running-in new liners, however, the duration of the reduction step can be shortened according to result of scavenge ports inspection.
The load on main engine during braking-in period should be increased carefully as *Plate 70714*.

Continuous use of piston rings;
the feed rate should be adjusted to approx. 125% BASIC SETTING onto the corresponding cylinder.
After approx. 15 hours running, the feed rate before piston overhaul can be applied.

See the instruction book “MAINTENANCE”, Chapter 902.

4.5.2 Running-in one or two cylinders

If only one or two cylinders have been renewed or have undergone reconditioning, the fuel index for the cylinders in question can be decreased in proportion to the required load reduction.
Increase the fuel index stepwise in accordance with the breaking-in schedule, see *Plate 70714*.

⚠ The pressure rise *pcomp–pmax* must not exceed the value measured on test bed at the reduced mean effective pressure or fuel index.

⚠ If the engine is fitted with the Turbo Compound System (TCS), the TCS must be out of operation if running-in with reduced fuel index is chosen in order to safeguard the gear.

4.6 Special Conditions

It is recommended to adjust the actual feed rate in the following cases:

a) During start, manoeuvring;
Increase the cylinder oil feed rate; at least approx. +25% after initial breaking-in period.

For the engine with only Mechanical type lubricator, move the regulating handle on the lubricator to one step-up position manually.
In case that the Mechanical lubricators with LCD system are operated in LCD mode, the cylinder oil feed rate is increased automatically.

For the engine with Alpha lubricator system, the cylinder oil feed rate is increased automatically up to +25% (having upper limit of 150% BASIC SETTING).

b) If abnormal cylinder conditions are found;
The cylinder oil feed rate should be adjusted to approx. 150% BASIC SETTING onto the corresponding cylinder.
Maintain this over-lubrication until the cause of the problem has been eliminated, and scavenge port inspections proved that a safe condition has been re-established.

Run-in the cylinder(s) as described in Item 4.5.

The deterioration of the cylinder condition may be caused by incompatibility high alkaline cylinder oil and certain low sulphur fuels, or some diesel oils, see Item 3.1.

c) If the load pattern changes or if the fuel oil quality deteriorates;
readjust the cylinder oil feed rate to the100% BASIC SETTING.

Find the new adequate feed rate by repeating the stepwise reduction described in "Cylinder Condition", Item 4.13.

4.7 Calculating the Pump Stroke and Cylinder Oil Consumption of the Mechanical type Lubricator

a) Calculation of the pump stroke at specified MCR

Use the results from Item 4.4 for calculating the pump stroke at specified MCR.

The pump stroke can be calculated as follows:

$$S = \frac{Q_{MCR} \times 4 \times 10^6}{\pi \times D^2 \times \eta \times G \times N \times 60 \times 24}$$

where

S	:	pump stroke	[mm]
Q_{MCR}	:	cylinder oil feed rate, see Item 4.4	[liter/day-cyl.]
D	:	diameter of pump piston	[mm]
η	:	volumetric efficiency (0.9)	
G	:	number of oil inlets per engine cylinder	
N	:	lubricator speed	[min^{-1}]
		for 42 ~ 98MC(-C)	: lubricator speed = engine speed
		for 26 ~ 35MC	: lubricator speed = engine speed / 2

Example: 6S50MC-C (9480kW × 127 min^{-1})

BS = 1.5 g/kW-h, $OUTPUT_{MCR}$ = 9480 kW, C = 6,
D = 4.5 mm, G = 6 point/cyl., N = 127 min^{-1}

then,

Q_{MCR} = 1.5 × 9480 / 6 × 24 / (0.92 × 1000)
= 61.8 liter/day-cyl.

S = 61.8 × 4 × 10^6 / (π × 4.5^2 × 0.9 × 6 × 127 × 60 × 24)
= 3.93 mm

b) Calculation of the cylinder oil consumption by measuring the pump stroke

The daily oil consumption per cylinder, based on the lubricator's pump stroke, i.e. free movement of the individual adjusting screws, can be carried out as follows:
See also Chapter 703 "Starting-up, Manoeuvring, and Arrival in Port", Item 2.4, Check 8.
However, actual oil consumption should be measured.

$$Q = \frac{S \times \pi \times D^2 \times \eta \times G \times N \times 60 \times 24}{4 \times 10^6}$$

Regarding explanation of the equation, see above a).

Example: 6S50MC-C (9480kW × 127 min^{-1})

D = 4.5 mm, G = 6 point/cyl., N = 127 min^{-1}
Measured stroke : 3.93 mm

then,

Q = 3.93 × π × 4.5^2 × 0.9 × 6 × 127 × 60 × 24 / (4 × 10^6)
= 61.7 liter/day-cyl.

4.8 Calculating the Cylinder Oil Consumption of the Alpha Lubricator System

Regarding to the calculation of the cylinder oil consumption, see the "INSTRUCTION MANUAL FOR ADJUSTMENT & MEASUREMENT" of this instruction book, and the instruction book "COMPONENT DESCRIPITION (ACCESSORIES)"

Plate 70701 Inspection through Scavenge Ports

1) Dismantle the small covers on the scavenge air boxes, and clean the openings.

2) When the piston has been turned below the level of the scavenge air ports, inspect the cylinder liner walls and the piston crown.

3) A tiltable mirror fixed to a telescopic rod can be used as illustrated.

4) In order to inspect a larger area of the cylinder liner and piston, it is expedient to enter the scavenge air receiver and make observations from the “exhaust side”.
   This should be done every time the sludge is cleaned out from the scavenge air receiver and box.

5) While the piston is passing the scavenge air port, examine the piston crown, the rings, and the skirt.
   In order to be able to correctly observe the running surfaces of the piston rings, clean them with a rag.

   Check the free movement and the tension of the piston rings, by pressing them with a wooden stick.

6) When the piston has been turned upwards past the scavenge air ports, inspect the piston rod.

7) Note down the results on *Plate 70702*.

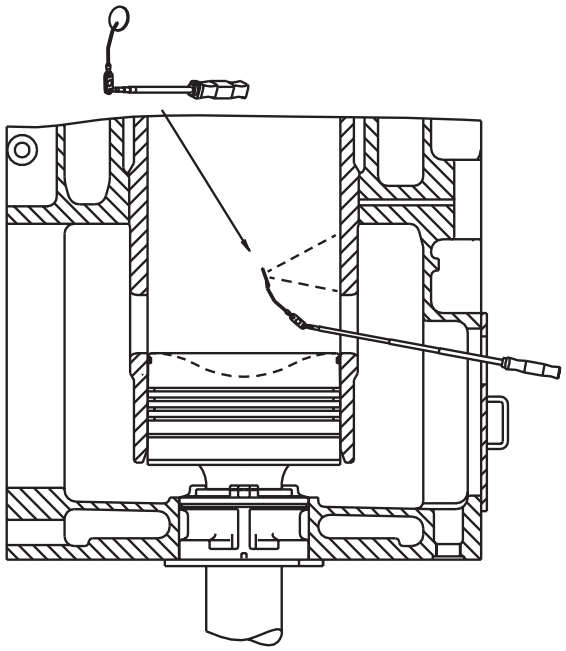

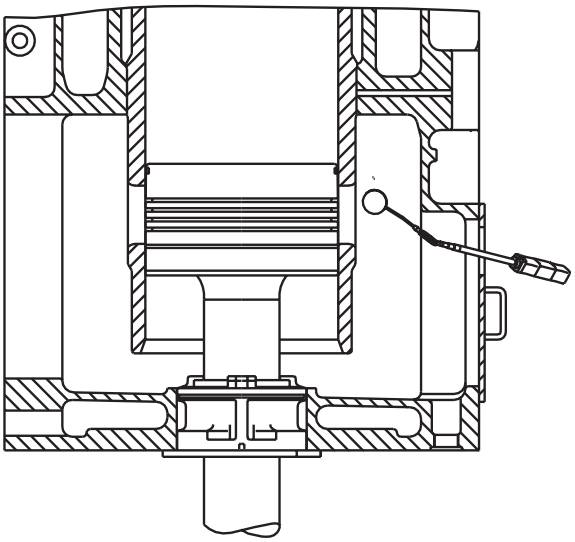

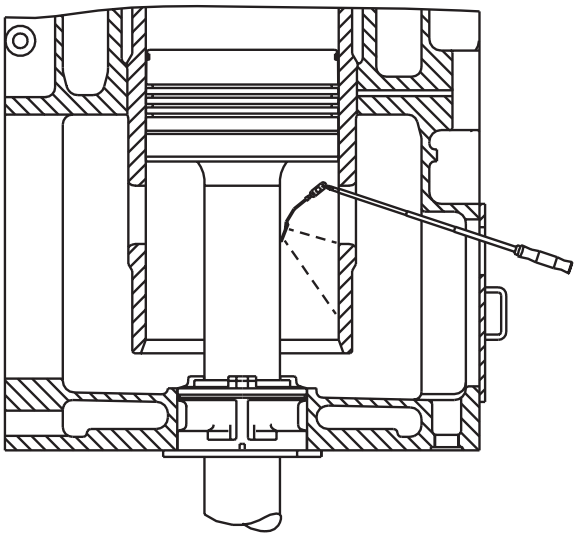

Plate 70702 Inspection through Scavenge Ports, Record

M/V	Engine Type:		Running hours Total:	Checked by:
Yard: No.:	Builder:	Engine No.:	Cylinder oil dosage:	
	Built year:			Data:

	Condition and symbol		Engine Part	Cylinder No.											
				1	2	3	4	5	6	7	8	9	10	11	12
	Carbon	C	Piston crown												
	Burning	BU													
	Leakage oil	LO													
	Leakage water	LW													
Deposits	No deposit	•	Top land												
	Light deposit	LC	Ring land 1												
	Excessive deposit	EC	Ring land 2												
	Polished deposit	PC	Ring land 3												
Ring breakage	Intact	•	Ring 1												
	Broken opposite ring gap	BO	Ring 2												
	Broken near gap	BN	Ring 3												
	Several pieces	SP	Ring 4												
	Entirely missing	M													
	Collapsed	COL													
Ring Movement	Loose	•	Ring 1												
	Sluggish	SL	Ring 2												
	Running surface,		Ring 3												
	– Black, overall	B	Ring 4												
	– Black, partly	(B)													
	Black ring ends >100 mm	BR													
Surface Condition	Clean, smooth	•	Ring 1												
	Scratches (vertical)	S	Ring 2												
	Micro-seizures (local)	mz	Ring 3												
	Micro-seizures (all over)	MZ	Ring 4												
	Micro-seizures, still active	MAZ	Piston skirt												
	Old MZ	OZ	Piston rod												
	Machining marks still visible	••	Cylinder liner abv. scav. ports												
	Wear rides near bottom	WR	Cylinder liner near scav. ports												
	Scuffing	SC													
	Clover-leaf wear	CL													
	Corrosion	CO													
	Ring sharp-edged Top/Bot	T/B													
Lubrication Condition	Optimal	•	Ring 1												
	Too much oil	O	Ring 2												
	Slightly dry	D	Ring 3												
	Very dry	DO	Ring 4												
	Black oil	BO	Piston skirt												
			Piston rod												
			Cylinder liner												
Deposits	Little sludge	LS	Scavenge box												
	Much sludge	MS	Scav. receiver												
	Movable	M	Flaps and non-return valves												
Running hours since last overhaul															

Symbol	Condition of inspected part	
•	Satisfactory	Deposits, etc.
C	Carbon Deposit	
BU	Burning	
LO	Leakage Oil	
LW	Leakage Water	
•	Satisfactory (no deposits)	Deposits
LC	Light carbon deposit	
EC	Excessive carbon deposit	
PC	Thick carbon deposit worn bright by rubbing against cylinder liner	
•	Intact	Broken
BO	Broken, opposite ring gap	
BN	Broken, near ring gap	
SP	Broken in several pieces	
M	Entirely missing	
COL	Collapsed	
•	Loose	Sticking
SL	Sluggish in groove	
ST	Sticking	
B	Black running surface, overall	
(B)	Black running surface, partly	
•	Clean, smooth	Surface condition
S	Vertical scratches (abrasive (particles)	
mz	Micro seizures in spots (local)	
MZ	Micro seizures, all over	
MAZ	Micro seizure still active	
OZ	Old (nearly recovered) MZ	
WR	Wear ridges near bottom	
CO	Corrosion	
CL	Clover-leaf wear	
T/B	Ring sharp-edged Top/Bot	
•	Oil film normal	Lub. condition
O	Too much oil	
D	Too dry	
DD	Very dry	
BO	Black oil	

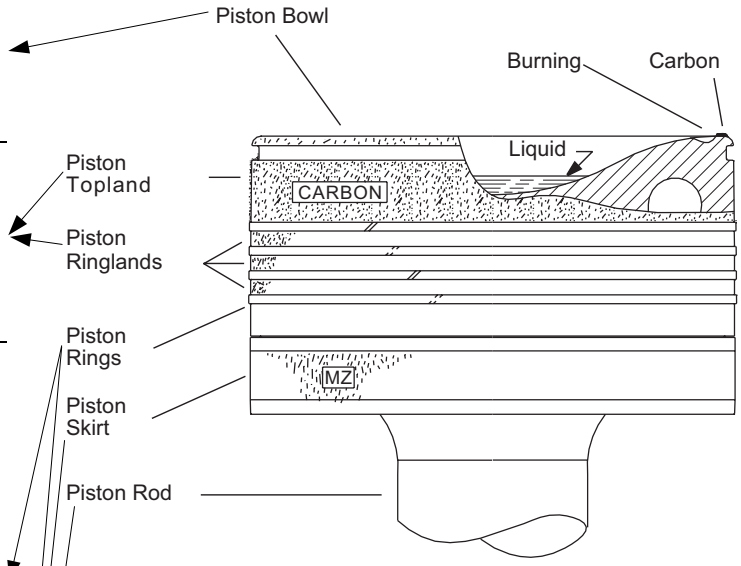

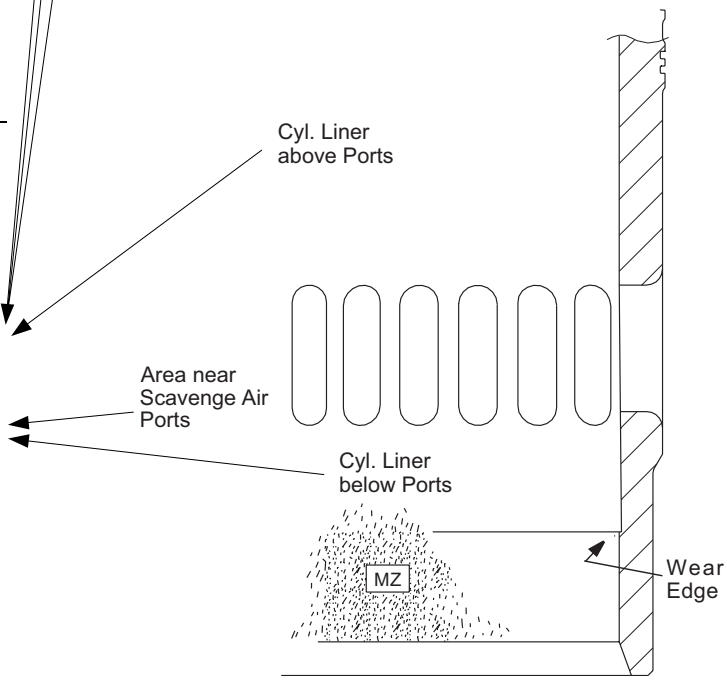

A mark (•) always means that the inspected condition is satisfactory, e.g. small deposits, no leakage, no breakages, no sticking, clean smooth surface, normal oil firm, etc. However, this shall be recorded in order to show that the condition has been noted.

Plate 70704 Inspection through Scavenge Ports

Running Surface of Piston Rings
(see also Plate 70705)

NB: In file tests, use a new very finely cut file.

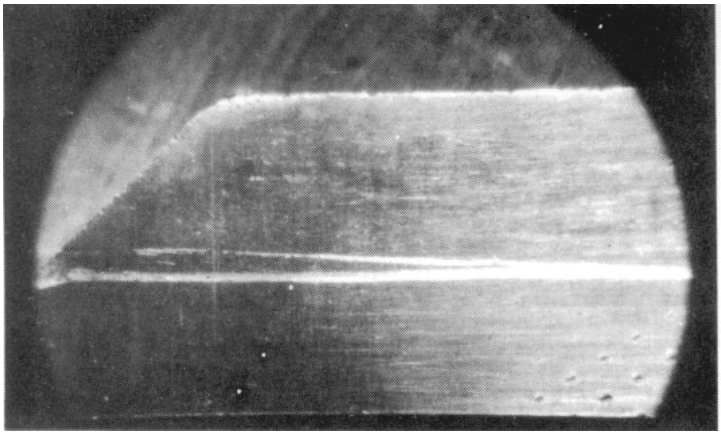

“Polished Mirror Surface”
Photo 1 (about ×3)

A normal, good running surface is smooth, clean, and without scratches.
The horizontal line is a scratch mark resulting from a file test, which indicates that the surface is not hardened.

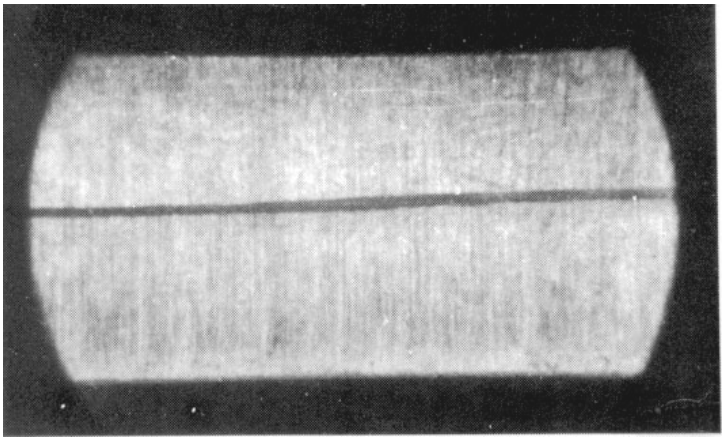

“Vertically Scratched”
Photo 2 (about ×3)

Here the running surface has been scratched by sharp, hard abrasive particles, e.g. grains of sand.
The file test shows that the surface is not hardened.

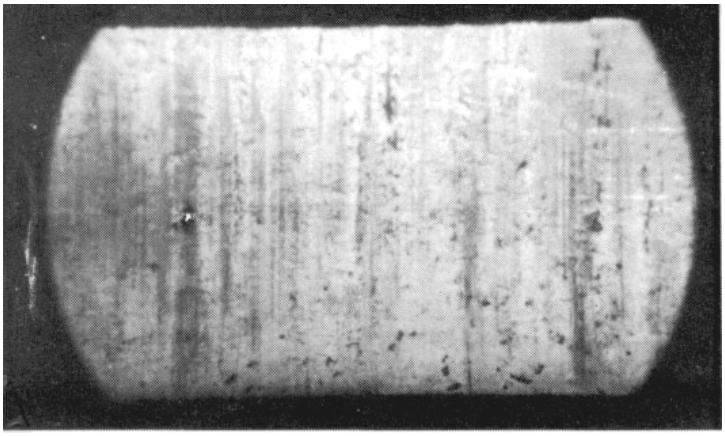

“Micro-Seizures”
Photo 3 (about ×3)

A micro-seized running surface can appear as shown here.
The file test gives almost no horizontal scratch, which indicates that the surface is covered by a hard glaze, i.e. has been hardened due to micro-seizure.

Plate 70705 Inspection through Scavenge Ports, Evaluation

Surface Condition	Profile	Running surface
Normal good “mirror surface” “•”	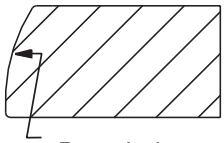	
Scratched by hard abrasive particles “S”	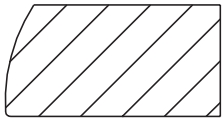	
New Micro seizures (still active) “MAZ”	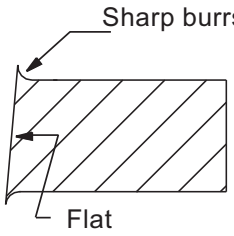	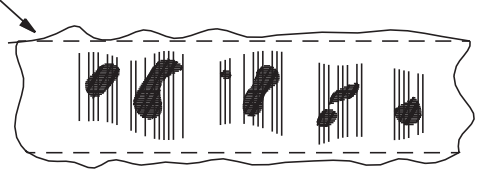
Old Micro seizure (restoration has begun) “OZ”	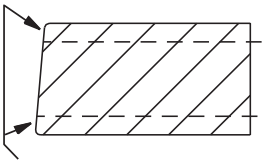	

Clover-leaf formation :
heavy wear at several areas around the cylinder liner, in the case illustrated concentrated between the lubrication orifices

“CL”

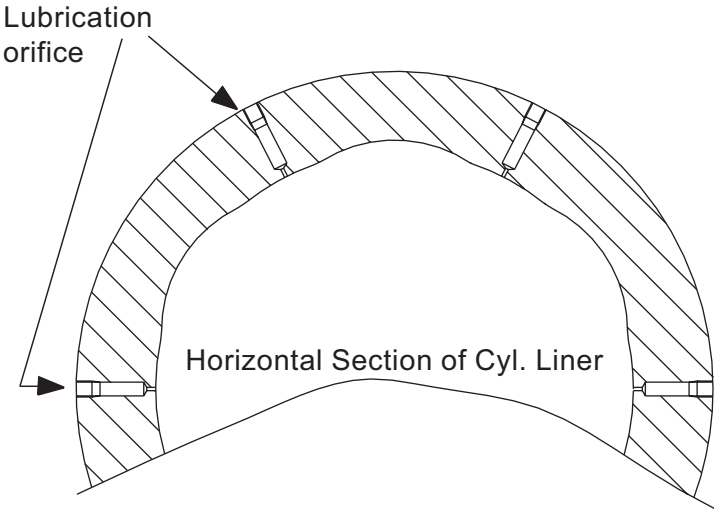

Plate 70706 Factors influencing Cylinder Wear

Schematic summary of the most widely recognized causes of “Cylinder wear”

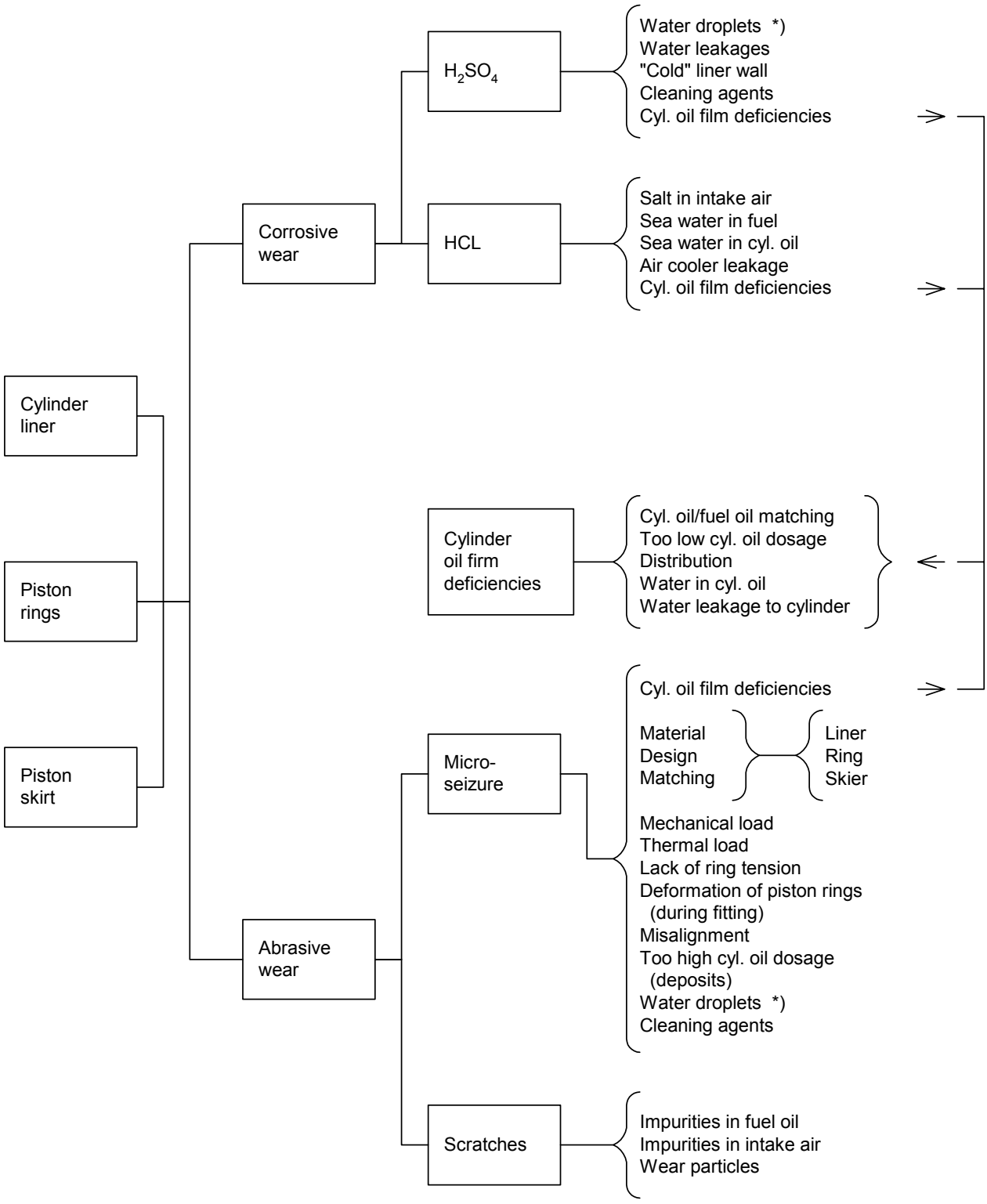

*) See also Chapter 706 “Cleaning of Turbocharger and Air Coolers”, Item 3.

Plate 70707 Abrasive Particles

Typical observations when particles penetrate from the combustion chamber into the piston ring zone.

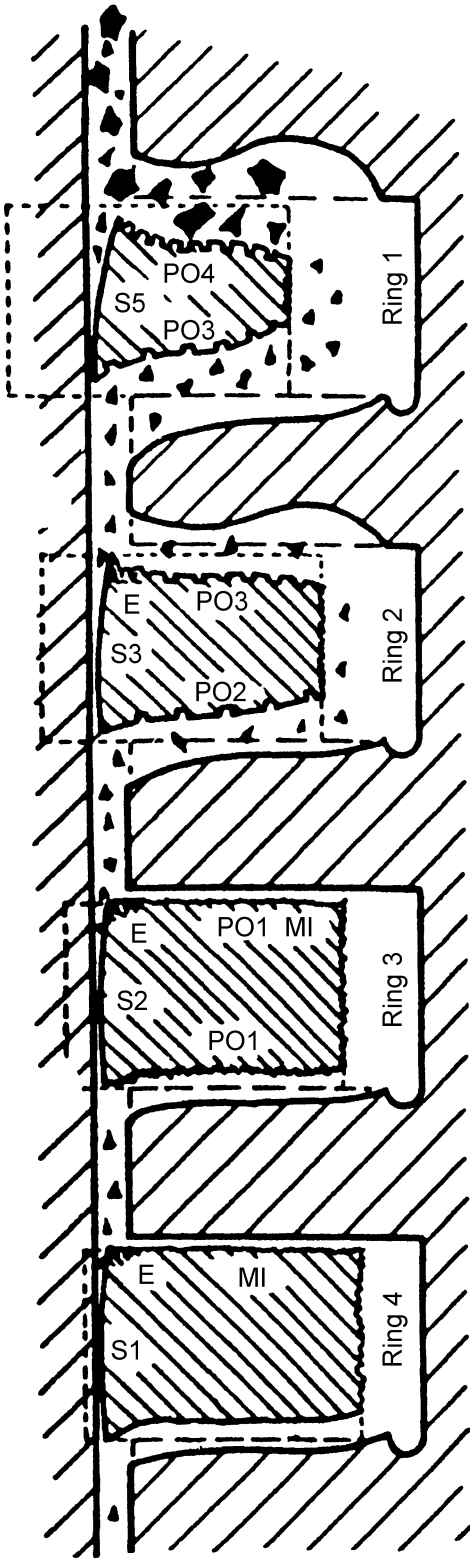

Exaggerated illustration of “worn and eroded” piston rings No. 1 to 4, in “worn” grooves.
It is typical for particle wear that it excessively affects the upper ring (both the running face and the horizontal surfaces) as well as the groove.
Some degree of micro-seizure sometimes occurs on the lower rings, decreasing upwards.
This is contrary to the scratching intensity (or roughness) which decreases, from ring to ring, downwards.
When particle-wear prevails, the cylinder liner wear rate usually rises to between 0.30 and 0.50 mm/1000 hours.

Running face ring No.1

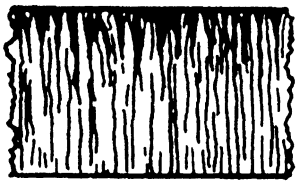

“The trumpet-shaped” scratches indicates that the hard particles have penetrated from above.

Upper side of the uppermost rings

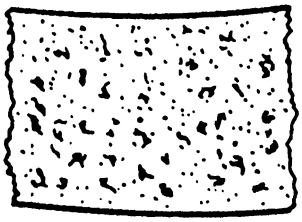

The horizontal faces, especially the upper side, often become pock-marked due to hard grains being crushed when the rings are pressed upwards by the gas trapped between the rings.
However, such an appearance can also be the result of mechanical impact due to ring collapse.

Upper side of the lower rings

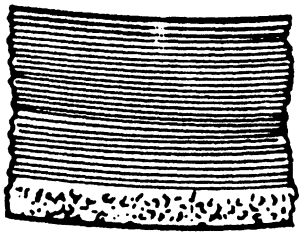

The part sheltered in the groove still shows intact machining marks.
The exposed part, protruding from the groove, becomes sand-blasted by the hard particles blown down through the ring gap above.

Designations:

“S”	-	Scratched running face.
“PO”	-	“pock-marked”
“E”	-	Erosion. Outer edged sand-blasted.
“MI”	-	Machining marks intact.

Numbers 1 to 5 give degree of damage (5 being most).

Plate 70708 Abrasive Particles

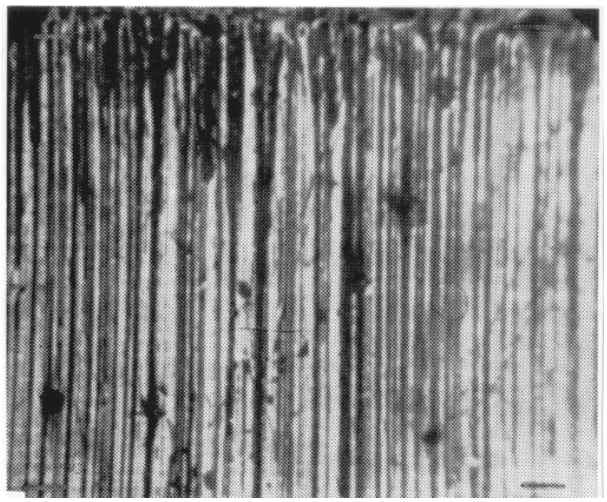

Photo 1 (× 30)
Rough scratching
(degree 5) of a top piston ring running face.
The photo shows the upper edge, where the hard particles enter between ring and liner wall.
This scratching is quite fresh, i.e. recovery or restoration has not yet commenced.
Designation S5NEW

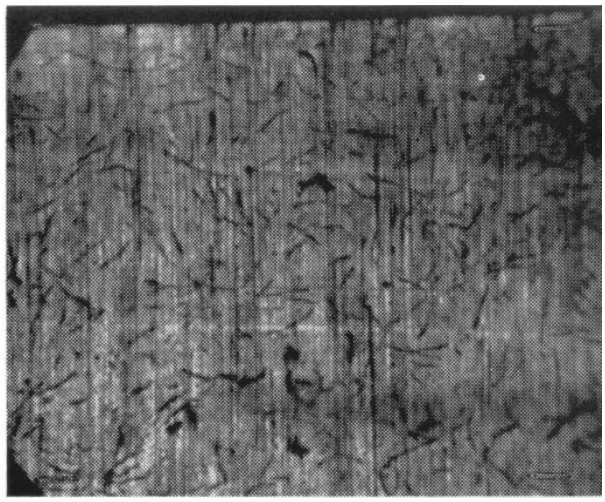

Photo 2 (× 30)
Typical “older” much finer scratching.
That recovery or restoration is at work, can be seen from the fact that the graphite flakes are distinct.
Designation S2OLD

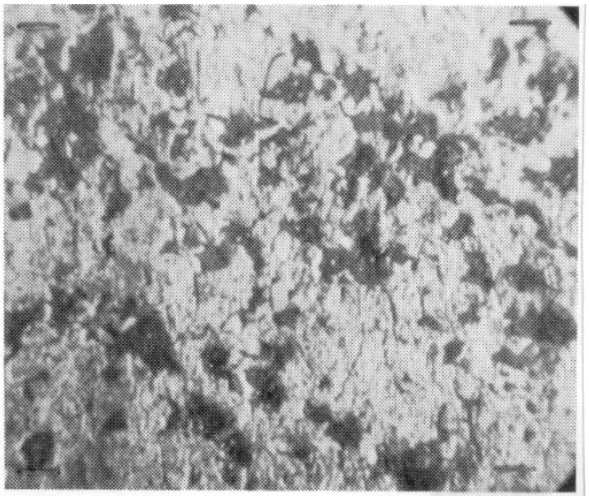

Photo 3 (× 30)
Typical “pock-marking” of a ring upper side, caused by hard particles penetrating into the clearance above the ring and being crushed.
This is most often seen on the two uppermost rings, which, during
the last part of the expansion stroke, are pressed upwards, against the ceiling of the groove, by the gas trapped between the rings.

Photo 4 (× 30)
This photo illustrates how small pieces of cast iron are “torn out” of the top surface, by the masticating effect of the hard particles.
The pieces probably loosen due to shear stresses, which cause fractures in the material between the graphite flakes.
Also ring collapse can cause “torn out” material.

Plate 70709 Abrasive Particles

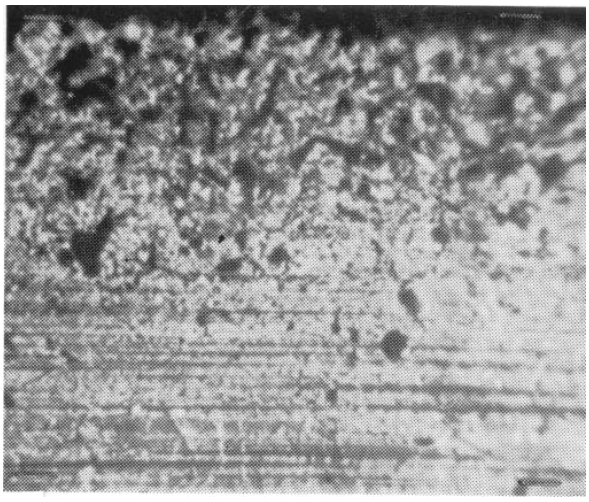

Photo 1 (× 30)
Typical erosion or sand-blasting on the part of the ring topside which protrudes out of the groove.
This is due to hard grains being blown down through the gap in the ring above (NB: The rings “turn” in the grooves).
Such erosion is only seen on rings No.2, 3 and 4.

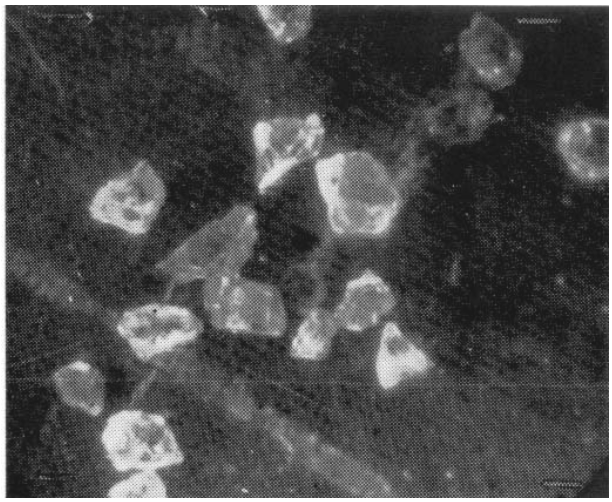

Photo 2 (× 30)
Hard particles (sand) separated from a sample of piston crown deposit.
Oil and carbon have been removed by incineration, other matter by acid, magnetic separation and filtration.
Theoretically these particles could have come into the combustion chamber either with the air or with the fuel.

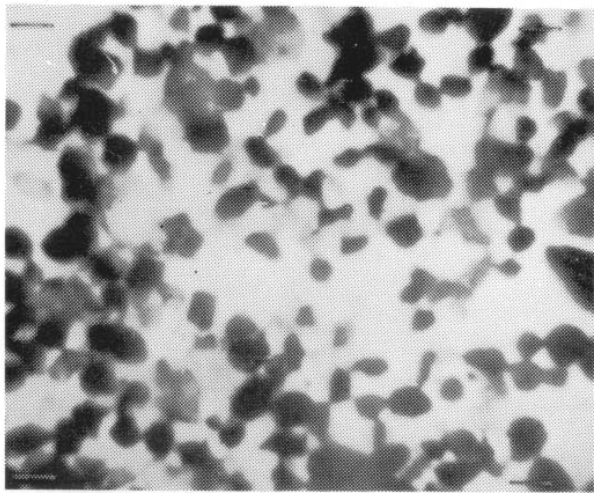

Photo 3 (× 250)
Sand (or sand-like grains) separated from centrifuge sludge.
In this case the centrifuge treated the fuel oil after the oil had passed a full flow (fabric) filter.
The particles size is 10 to 15 µm.

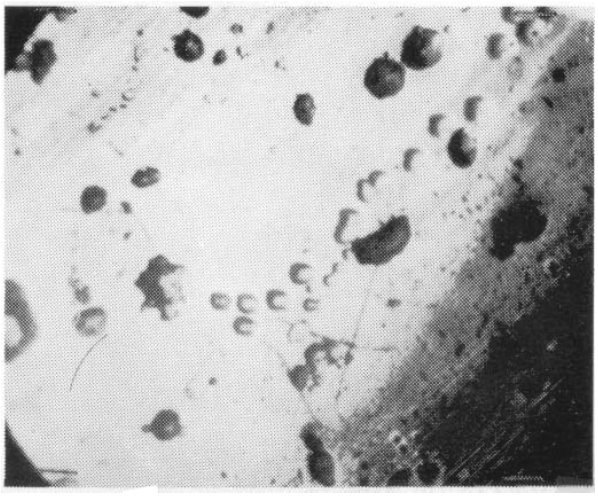

Photo 4 (× 30)
Fuel pump suction valve flap after only a few service hours (the lapping marks are still visible).
The depressions in the surface are in many cases made by one and the same particle (repeated and identical in shape and size).
Usually the edge around the holes is raised, and often the original lapping marks are still visible in the bottom of the depressions.

Plate 70710A Guidance Schedule of Cylinder Oil Feed Rate Adjustment (with Mechanical type lubricators)

For L-MC(-C), K-MC(-C) engines
with Mechanical type Lubricators

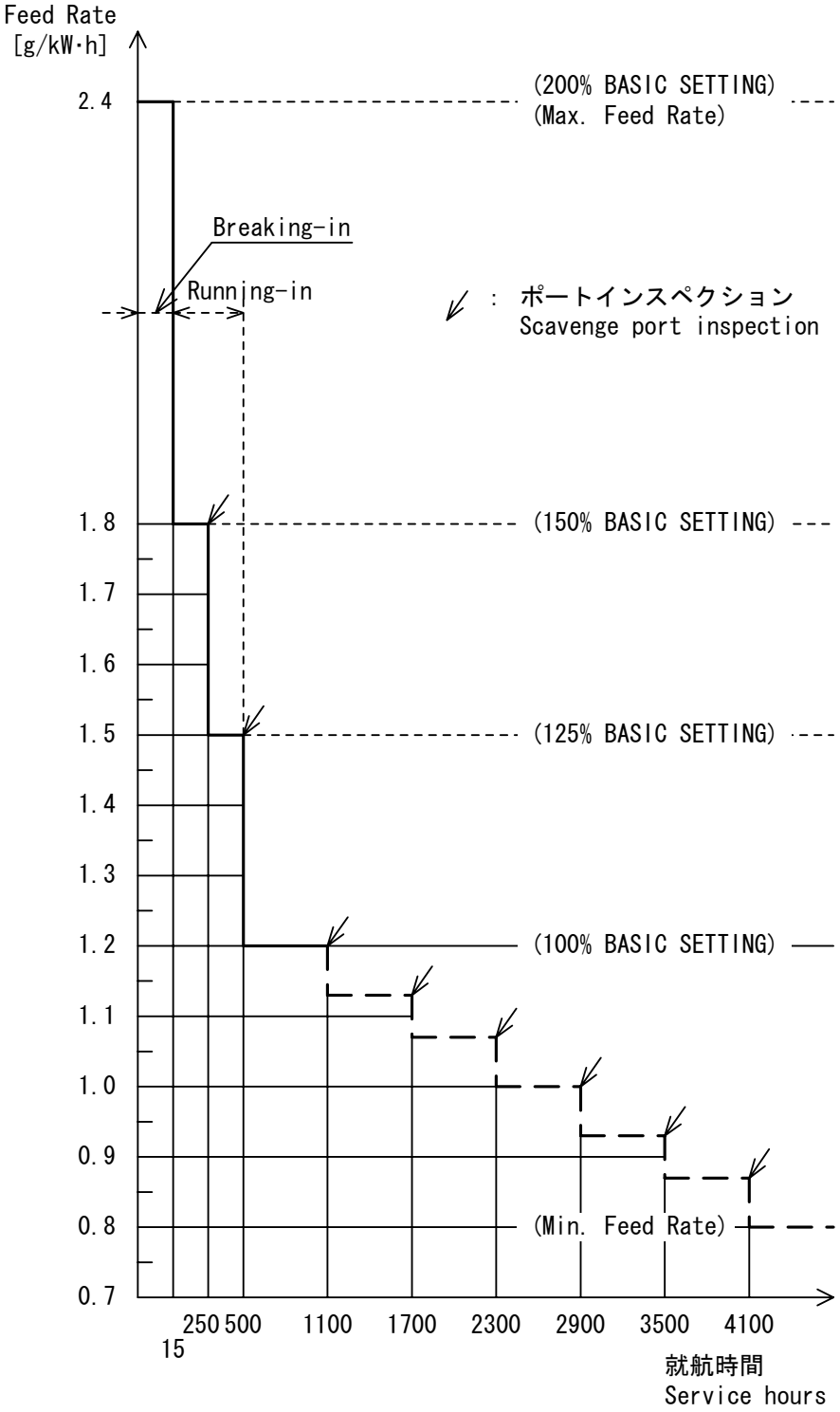

Plate 70710B Guidance Schedule of Cylinder Oil Feed Rate Adjustment (with Mechanical type lubricators)

For S-MC(-C) engines
with Mechanical type Lubricators

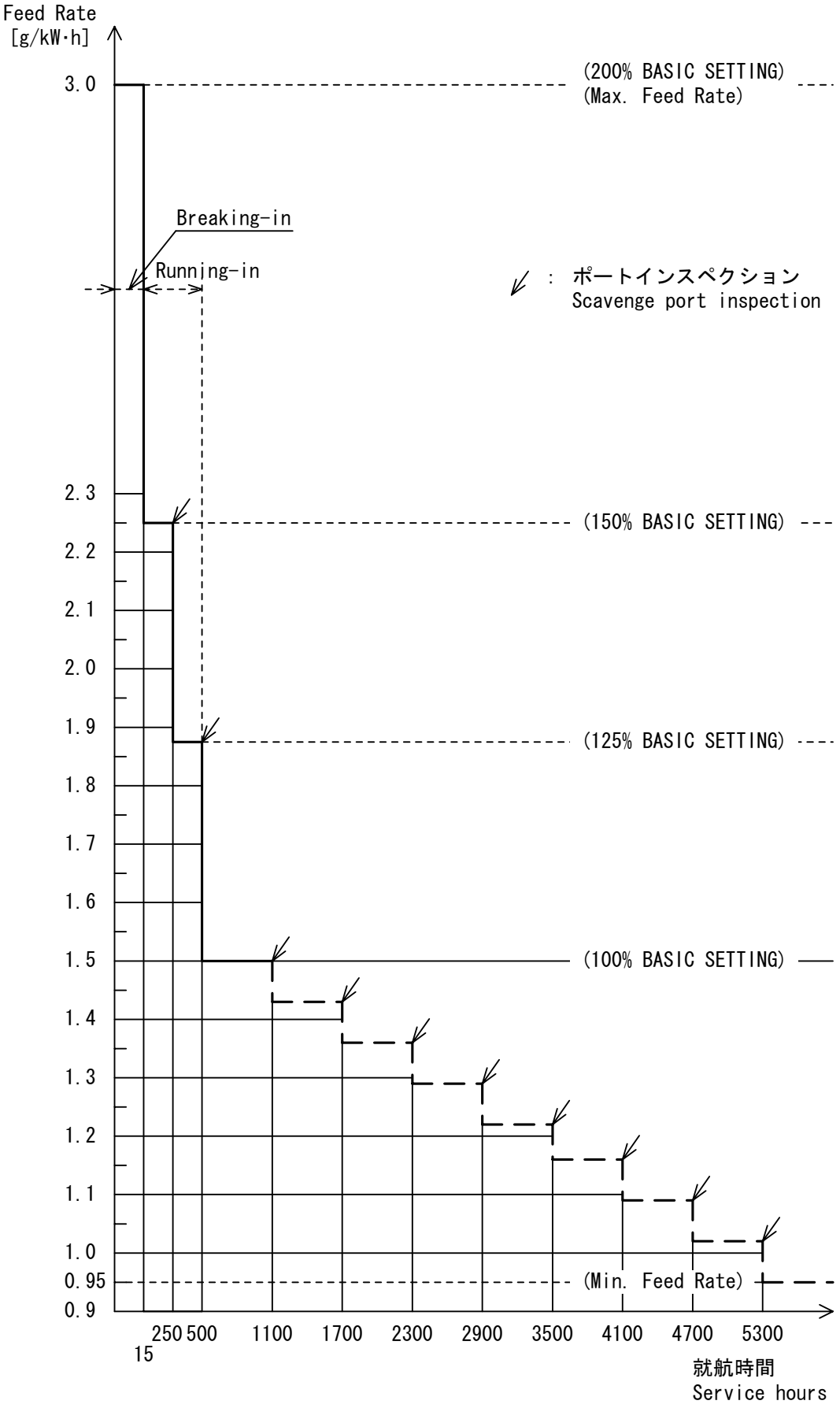

Plate 70710C Guidance Schedule of Cylinder Oil Feed Rate Adjustment (with Alpha Lubricator System)

For L-MC(-C), K-MC(-C) engines
For S-MC(-C) engines (cylinder bore 60cm and smaller)
with Alpha Lubricator System

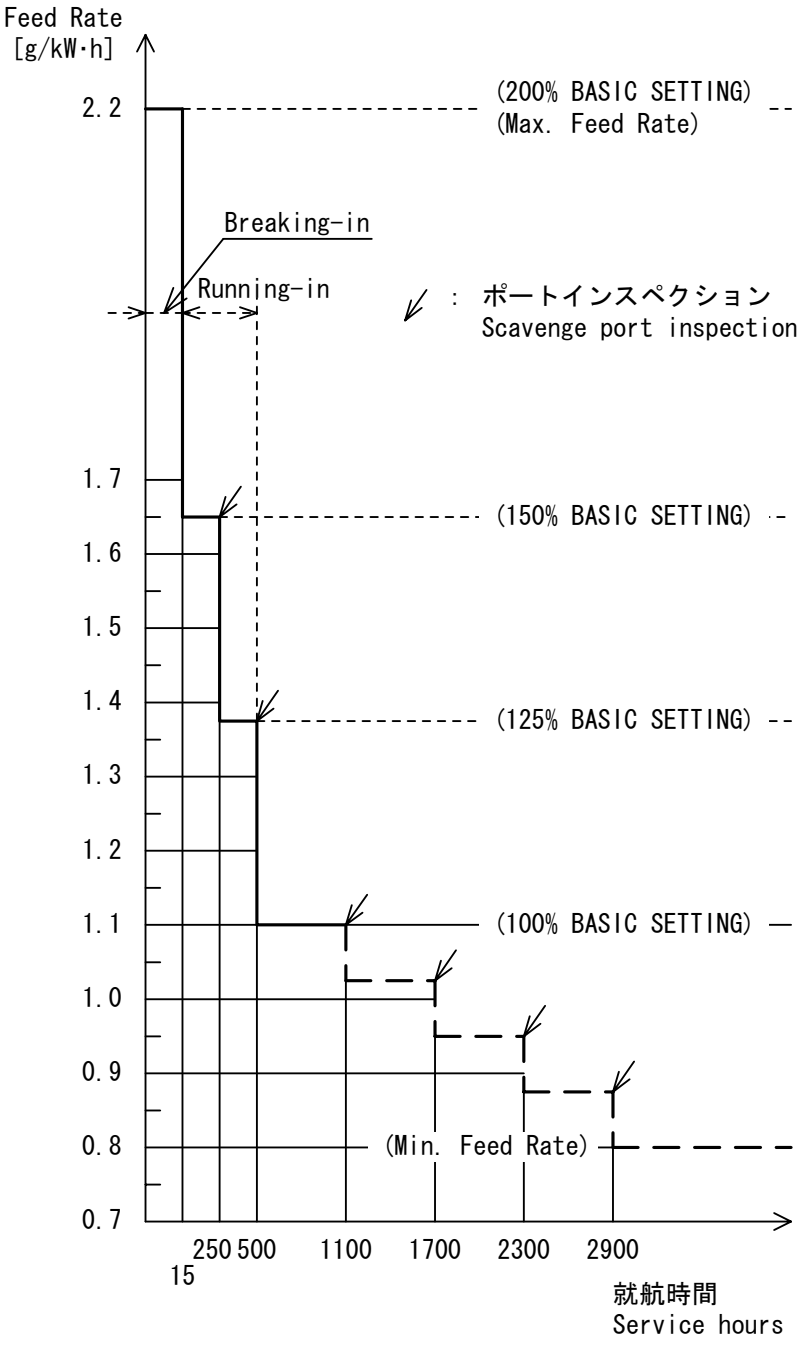

Plate 70710D Guidance Schedule of Cylinder Oil Feed Rate Adjustment (with Alpha Lubricator System)

For S-MC(-C) engines (cylinder bore 70cm and larger)
with Alpha Lubricator System

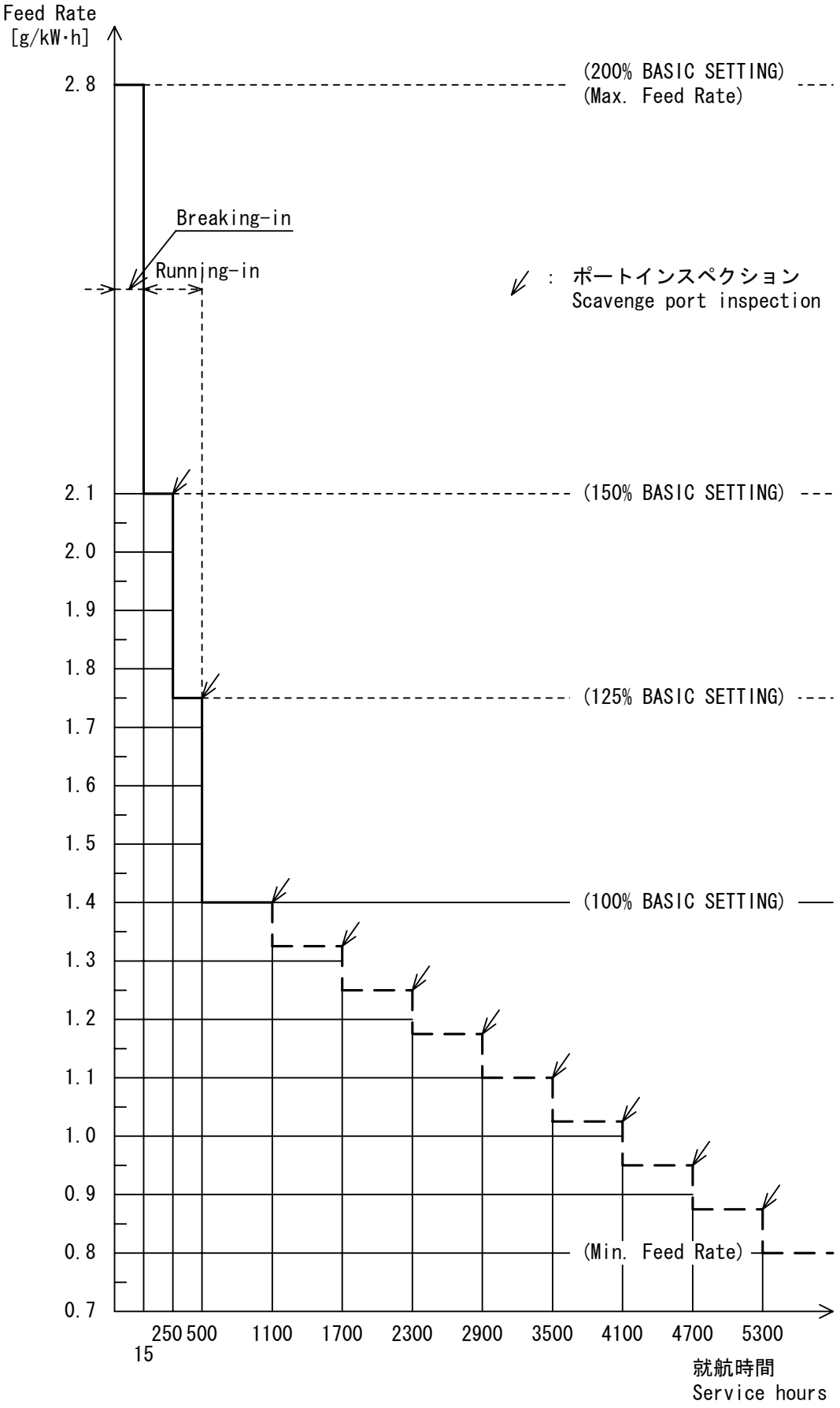

Cylinder Condition Report

Vessel:		Cyl. no:		Work no.: **TE**		Eng. type:	
		Total run hrs.				Check date:	

Voyage info.

Weeks pr. Port calls:		Rating kW/min^{-1}:		Nomal service load kW:	
Cyl. oil consump.(1/24hrs):		at min^{-1}:		Cyl. oil type:	
Cylinder liner	Lubricator type (Mechanical / Alpha):				
Liner hrs.:		Insulation pipe (Y / N):		Liner material:	
Drawing no.:		PC ring (Y / N)		Liner cool type:	
FV Atomizer type:		FW out temp		Fuel oil	Vis,	SG,	S,

Measuring point			1	2	3	4	5	6	7	8	9	10	11		
Depth(mm)															
Diameter (mm)	F–A														
	E–M														

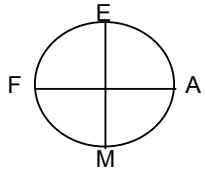

E: Exhaust
A: Aft
M: Maneourve
F: Fore

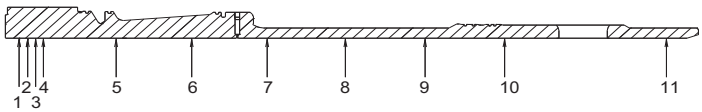

Cyl. cover tightened (Y / N):		Temp. between liner and measuring tool (℃):		Shims(mm):	
Liner remarks					

Piston rings Hours since last overhaul:

	Width of ring(mm)					Nominal height (mm)	Height of ring (mm)				
	A	B	C	D	E		A	B	C	D	E
Degrees											
Ring 1											
Ring 2											
Ring 3											
Ring 4											

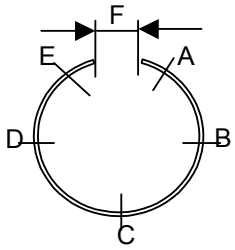

"F" to be measured before dismantling

	Piston ring type / Material	Free ring gap "F"	Lock type (R/L/GT)	Broken (Y/N)	**Piston skirt Guide ring (Y/N)**
Ring 1					
Ring2					
Ring3					
Ring4					

Reason for examination (Y)	
Routine overhaul:	Broken rings:
Routine check:	Collapsed rings:
Low Pcomp:	Leakinge of piston:
Blow-by:	Change of piston:
Scavenge fire:	Pist. skirt scuffing:
Change of liner:	Other:

Ring grooves

	H (mm)			
	F	E	A	M
Ring1				
Ring2				
Ring3				
Ring4				

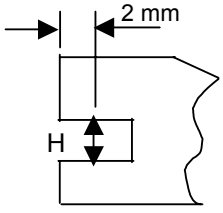

Piston top:

Piston no.:	1
Crown (hrs.):	
Max buming 1.(mm):	
Position 1. (degree):	
Max buming 2.(mm):	
Position 2. (degree):	

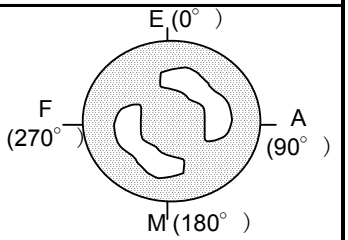

Piston remarks	

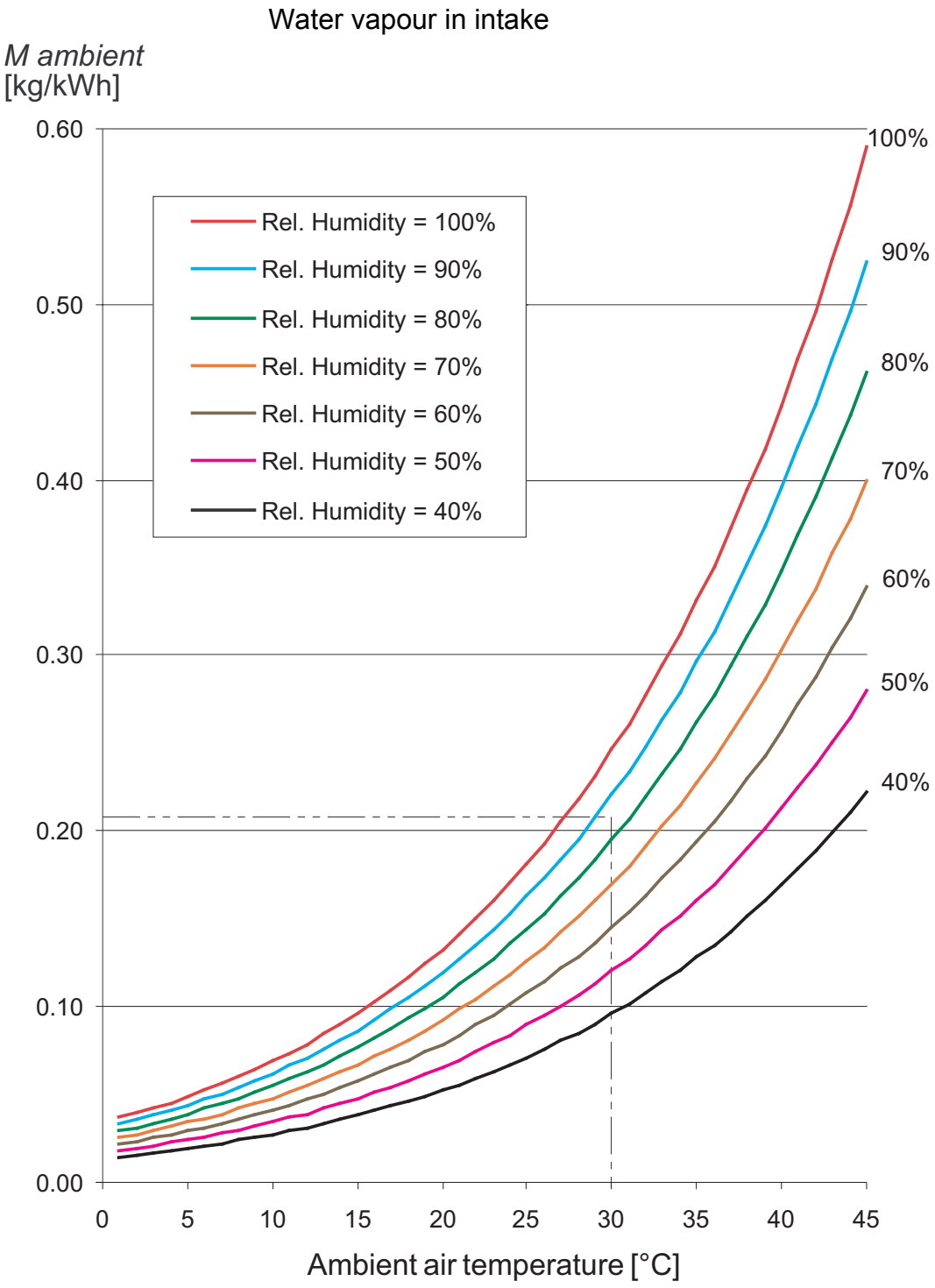
Water vapour in intake
M ambient
[kg/kWh]
0.60
0.50
0.40
0.30
0.20
0.10
0.00
0
5
10
15
20
25
30
35
40
45
Ambient air temperature [°C]
Rel. Humidity = 100%
Rel. Humidity = 90%
Rel. Humidity = 80%
Rel. Humidity = 70%
Rel. Humidity = 60%
Rel. Humidity = 50%
Rel. Humidity = 40%
100%
90%
80%
70%
60%
50%
40%

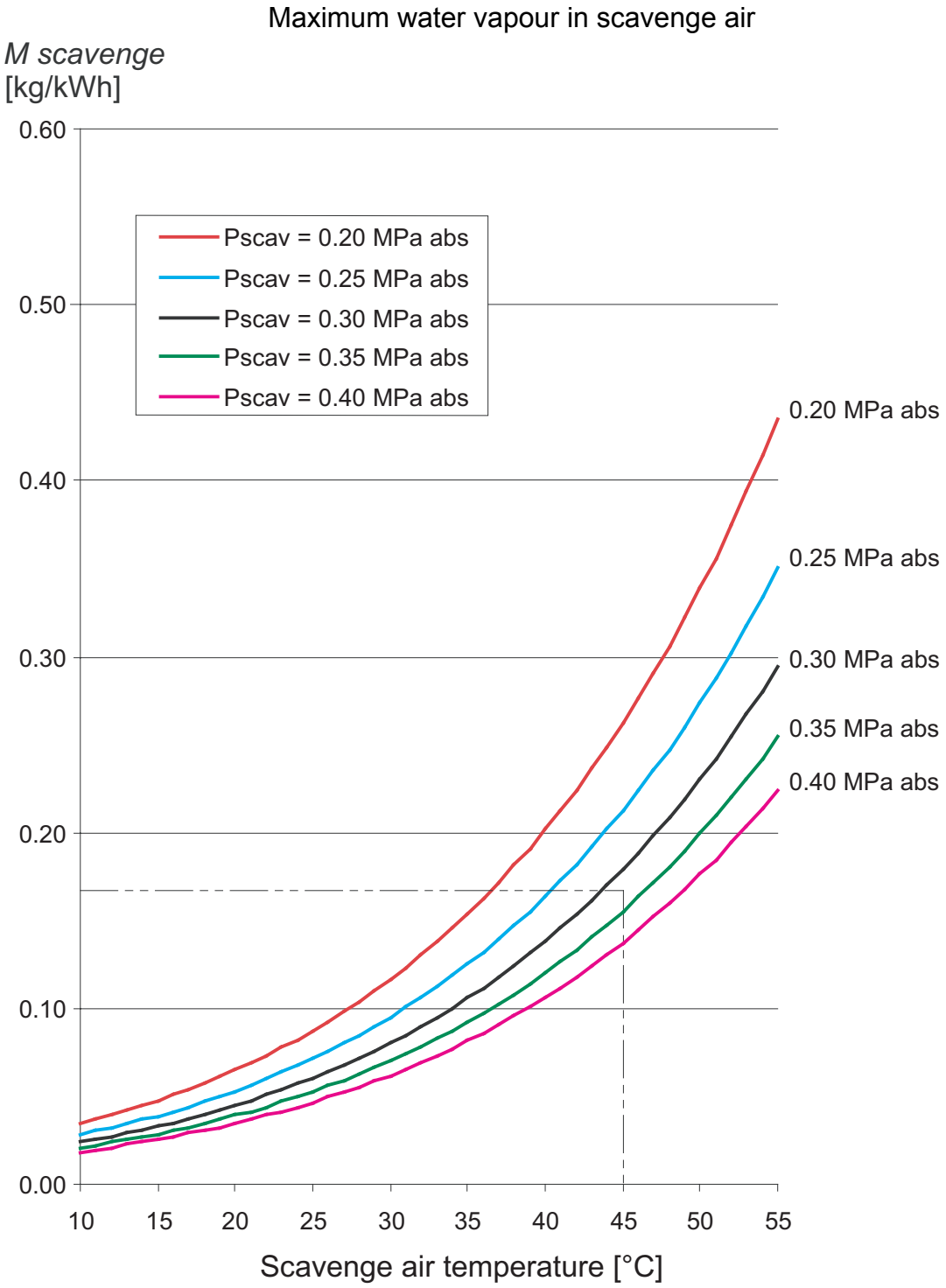
Maximum water vapour in scavenge air
M scavenge
[kg/kWh]
0.60
0.50
0.40
0.30
0.20
0.10
0.00
Pscav = 0.20 MPa abs
Pscav = 0.25 MPa abs
Pscav = 0.30 MPa abs
Pscav = 0.35 MPa abs
Pscav = 0.40 MPa abs
0.20 MPa abs
0.25 MPa abs
0.30 MPa abs
0.35 MPa abs
0.40 MPa abs
10
15
20
25
30
35
40
45
50
55
Scavenge air temperature [°C]

Plate 70714 Breaking-in Load

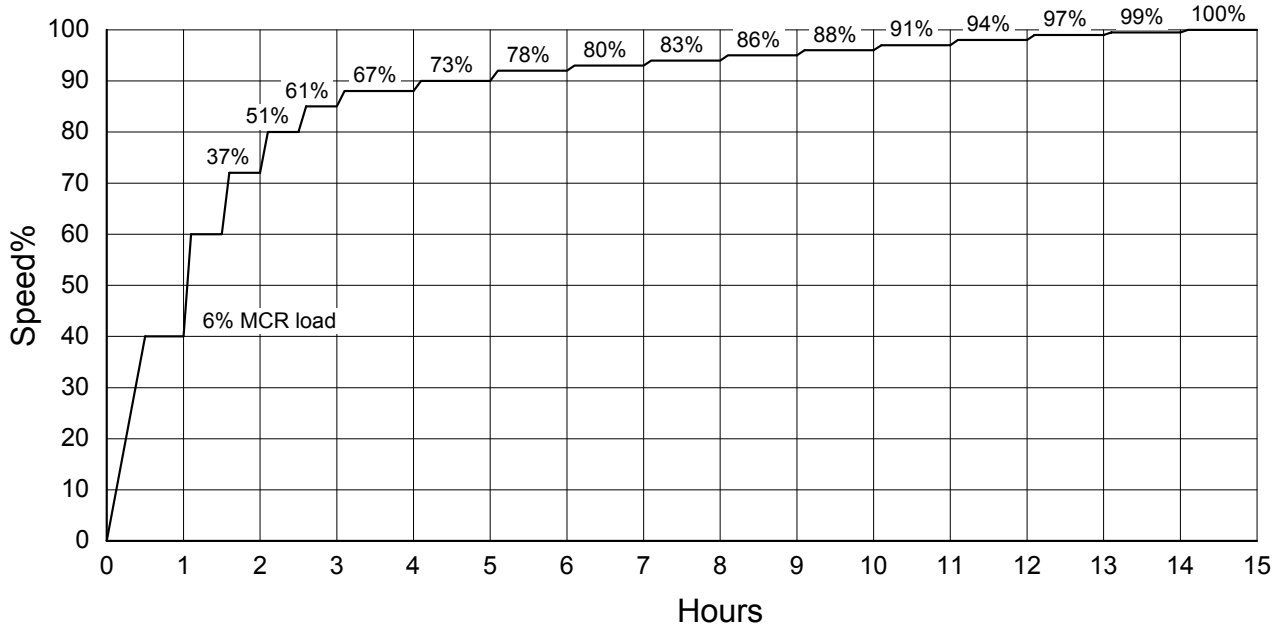

701 SAFETY PRECAUTIONS AND ENGINE DATA

702 CHECKS DURING STANDSTILL PERIODS

703 STARTING, MANOEUVRING AND RUNNING

704 SPECIAL RUNNING CONDITINS

705 FUEL AND FUEL TREATMENT

706 PERFORMANCE EVALUATION & GENERAL OPERATION

707 CYLINDER CONDITION

708 BEARING AND CIRCULATING OIL

709 WATER COOLING SYSTEM

710 DATA

Chapter 708
Bearings and Circulating Oil

Contents Page

Bearings

1. General Bearing Requirements and Criteria 708-05
2. Bearing Metals 708-05
   - 2.1 Tin based White Metal 708-05
   - 2.2 Tin Aluminium 708-05
3. Overlayers 708-06
4. Flashlayer, Tin 708-06
5. Bearing Design 708-06
   - 5.1 Smooth Run-out of Oil Groove 708-06
   - 5.2 Bore Relief 708-06
   - 5.3 Axial Oil Grooves and Oil Wedges 708-07
   - 5.4 Thick Shell Bearings 708-07
   - 5.5 Tin Shell Bearings 708-07
   - 5.6 Top Clearance 708-08
   - 5.7 Wear 708-08
   - 5.8 Undersize Bearings 708-08
6. Journals / Pins 708-09
   - 6.1 Surface Roughness 708-09
   - 6.2 Spark Erosion 708-09
   - 6.3 Surface Geometry 708-10
   - 6.4 Undersize Journals / Pins 708-10
7. Practical Information 708-11
   - 7.1 Check without Opening up 708-11
   - 7.2 Open up Inspection and Overhaul 708-12
   - 7.3 Types of Damage 708-12
   - 7.4 Cause for Wiping 708-12
   - 7.5 Cracks 708-13
   - 7.6 Cause for Cracks 708-13
   - 7.7 Repair of Oil Transitions 708-14
   - 7.8 Bearing Wear Rate 708-14
   - 7.9 Surface Roughness 708-15
   - 7.10 Repairs of Bearings on the Spot 708-15
   - 7.11 Repairs of Journals / Pins 708-16
   - 7.12 Inspection of Bearings 708-17

Contents Page

8. Crosshead Bearing Assembly 708-17
8.1 Bearing Type 708-17
8.2 Bearing Function and Configuration 708-18
8.3 Replacement Criteria of Tin-Aluminium Bearing 708-18
9. Main Bearings 708-19
9.1 Thick Shell Bearing Assembly 708-19
9.2 Thin Shell Bearing Assembly 708-19
10. Crankpin Bearing Assembly 708-19
11. Guide Shoes and Guide Strips 708-20
12. Thrust Bearing Assembly 708-20
13. Camshaft Bearing Assembly 708-21
14. Check of Bearing before Installation 708-22
14.1 Visual inspection 708-22
14.2 Check Measurements 708-22
14.3 Cautions 708-22

Alignment of Main Bearings

1. Alignment 708-23
2. Alignment of Main Bearings 708-23
2.1 Deflection Measurements 708-23
2.2 Checking the Deflections 708-24
2.3 Floating Journals 708-24
2.4 Causes of Crankshaft Deflection 708-25
2.5 Piano Wire Measurement 708-25
2.6 Shafting Alignment, Bearing Load, “Jack-up” Test 708-25

Circulating Oil and Oil System

1. Circulating Oil 708-26
2. Circulating Oil System 708-27
3. Circulating Oil Failure 708-27
3.1 Cooling Oil Failure 708-27
3.2 Lubricating Oil Failure 708-28

Contents Page

Maintenance of the Circulating Oil

1. Oil System Cleanliness 708-29
2. Cleaning the Circulating Oil System 708-29
   - 2.1 Cleaning before filling-up 708-29
   - 2.2 Flushing Procedure, Main Lub. Oil System 708-29
3. Circulating Oil Treatment 708-31
   - 3.1 General 708-31
   - 3.2 The Centrifuging Process 708-32
   - 3.3 The System Volume in relation to the Centrifuging Process 708-32
   - 3.4 Guidance Flow Rates 708-33
4. Oil Deterioration 708-34
   - 4.1 General 708-34
   - 4.2 Oxidation of Oils 708-35
   - 4.3 Signs of Deterioration 708-36
   - 4.4 Water in the Oil 708-36
   - 4.5 Check on Oil Condition 708-37
5. Circulating Oil: Analyses and Characteristic Properties 708-37
6. Cleaning of Drain Oil from Piston Rod Stuffing Boxes 708-39

Camshaft Lub. Oil system (Engines with Uni-Lub. System)

1. System Details 708-40
2. Pressure Adjustment 708-40
3. Flushing Procedure 708-40

Separate Camshaft Lub. Oil system (Engines without Uni-Lub. System - OPTION)

1. System Details 708-41
2. Pressure Adjustment 708-41
3. Camshaft Oil 708-41
   - 3.1 Fuel Contamination 708-42
   - 3.2 Water Contamination 708-42
   - 3.3 Flushing Procedure 708-42

Turbocharger Lubrication

1. TCA Type, NA Type Turbocharger 708-43
2. TPL Type Turbocharger 708-43
3. VTR Type Turbocharger 708-43
4. MET Type Turbocharger 708-43

Contents Page

Plates

Main Bearing, Thick Shell Design	70801
Main Bearing, Thin Shell Design	70802
Crosshead Bearing	70803
Crankpin Bearing	70804
Main Bearing Assemblies	70805
Guide Shoes and Strips	70806
Thrust Bearing Assembly	70807
Camshaft Bearing Assemblies	70808
Inspection of Bearings	70809
Location and Size of Damage in Bearing Shells	70810
Location of Damage on Pin / Journal	70811
Observations	70812
Inspection Records, Example	70813
Inspection Records, Blank	70814
Main Bearing Alignment	70815
Crankshaft Deflections, Limits	70817
Circulating Oil System (Engines with Uni-Lub System)	70818A
Circulating Oil System (Engines without Uni-Lub System)	70818B
Circulating Oil System on Engines	70819A
Circulating Oil System on Engines	70819B
Flushing of Main Lub. Oil System	70820
Flushing Log	70822
Cleaning System, Stuffing Box Drain Oil	70823
Camshaft Lubricating Oil System (Engines with Uni-Lub System)	70824A
Camshaft Lubricating Oil System (Engines with Uni-Lub System)	70824B
Camshaft Lubricating Oil System (Engines without Uni-Lub System)	70824C
Turbocharger Lubricating Oil System	70826A
Turbocharger Lubricating Oil System	70826B
Check Measurements	70827

Bearings

1. General Bearing Requirements and Criteria

Bearings are vital engine components; therefore, the correct bearing design and the proper choice of bearing metal is necessary for reliable engine performance.
Bearing design criteria depend on the bearing type and, in general, on:

a) Bearing load
   – Static
   – Dynamic

b) Bearing load direction

c) Journal / housing movement

d) Speeds

e) Cooling used

The compactness of engines and the engine ratings influence the magnitude of the specific load on the bearing and make the correct choice of bearing metals, production quality and, in certain bearings, the application of overlayer necessary. (See Item 3)

⚠ Scraping of the bearing surface is not advisable, except in those repair situations mentioned in Items 7.7 and 7.10.

It is strongly recommended to contact the engine builder for advice before starting any repairs, as incorrect scraping has often proved to have an adverse effect on the sliding properties of the bearing, and has resulted in damage.

2. Bearing Metals

2.1 Tin based White Metal

Tin-based white metal is an alloy with minimum 88% tin (Sn), the rest of the alloy composition is antimony (Sb), copper (Cu), cadmium (Cd) and small amounts of other elements that are added to improve the fineness of the grain structure and homogeneity during the solidification process.
This is important for the load carrying and sliding properties of the alloy.
Lead (Pb) content in this alloy composition is an impurity, as the fatigue strength deteriorates with increasing lead content, which should not exceed 0.2% of the cast alloy composition.

2.2 Tin Aluminium (A40 or AlSn40)

Tin aluminium is a composition of aluminium (Al) and tin (Sn) where the tin is trapped in a 3-dimensional mesh of aluminium.
A40 is a composition with 40% tin.

The sliding properties of this composition are very similar to those of tin based white metal but the loading capacity of this material is higher than tin based white metals for the same working temperature.; this is due to the ideal combination of tin and aluminium, where tin gives the good embedability and sliding properties, while the aluminium mesh functions as an effective load absorber.

3. Overlayers

As overlayer is a thin galvanic coating mainly lead (Pb) and tin (Sn), which is applied directly on to the white metal or, via a thin galvanically applied intermediate layer, on to the tin aluminium sliding surface of the bearing.
The overlayer is a soft and ductile coating, its main objective is to ensure good embedability and conformity between the bearing sliding surface and the pin surface geometry.
Overlayer is used in crosshead bearing design.

4. Flashlayer, Tin (Sn)

A flash layer is a 100% tin (Sn) layer which is applied galvanically; the thickness of this layer is a few µm.
The coating of tin flash functions primarily to prevent corrosion (oxidation) the bearing.

5. Bearing Design

Plain bearings for MC(-C) engines are manufactured as steel shells with a sliding surface of white metal or tin aluminium.
Tin aluminium bearings are always of the thin shell design while the white metal bearings can either be of the thick shell or thin shell design.

The bearing surface is furnished with a centrally placed oil supply groove and other design features such as smooth run-outs, oil wedges and/or bore reliefs.

5.1 Smooth Run-out of Oil Groove (*Plates 70801*, *70802*, *70804*, B-B)

A smooth run-out is a transition geometry between the circumferential oil supply groove and the bearing sliding surface.
This special oil groove transition geometry prevents an oil scraping effect and reduces the resistance to the flow of oil towards the loaded area of the bearing.

5.2 Bore Relief (*Plates 70801*, *70802*, *70804*, A-A)

The bearing sliding surface is machined at the mating faces of the upper and lower shells to create bore reliefs.
Their main objective is to compensate for misalignments which could result in a protruding edge (step) of the lower shell's mating face to that of the upper shell.
Such a protruding edge can act as an oil scraper and cause oil starvation.

5.3 Axial Oil Grooves and Oil Wedges (*Plates 70803, 70806,* A-A)

Oil grooves and wedges have the following functions:

a) To enhance the oil distribution over the load carrying surfaces.
The tapered areas give improved oil inlet conditions.

b) Especially in the case of crosshead bearings (*Plate 70803*) - to assist the formation of a hydrodynamic oil film between the load carrying surfaces.

c) To provide oil cooling (oil grooves).

In order to perform these functions, the oil must flow freely from the lubricating grooves, past the oil wedges, and into the supporting areas - where the oil film carries the load.

5.4 Thick Shell Bearings (*Plate 70801*)

This type of bearings has a steel back with the required stiffness:

a) to ensure against distortion of the sliding surface geometry, and
b) to support the cast-on white metal in regions where the shell lacks support, for example in the area of the upper shell mating surfaces.

The top clearances in this bearing design are adjusted with shims, while the side clearances are a predetermined result of the summation of the housing bore, shell wall thickness, journal tolerances, and the influence of the staybolt tensioning force which deforms the bedplate around the bearing assembly.

Thick shell bearing are typically 30 ~ 60 mm thick and used for main bearing only.

5.5 Thin Shell Bearings (*Plate 70802*)

Thin shell bearings have a wall thickness between 2% and 2.5% of the journal diameter.
The steel back does not have the sufficient stiffness to support the cast-on bearing metal alone.
The bearing must therefore be supported rigidly over its full length.

This type of bearing is manufactured with a circumferential overlength (crush / nip) which, when the shells are mounted and tightened up, will produce the required radial pressure between the shell and the bearing housing.

The top clearance in this bearing is predetermined and results from a summation of the housing bore, shell wall thickness, journal / pin diameter tolerances and, for main bearings, the deformation of the bedplate from the staybolt tightening force.

5.6 Top Clearance

Correct top clearance in main bearings, crankpin bearings, and crosshead bearings is balance between sustaining the required oil flow through the bearing, hence stabilising the bearing temperature at a level that will ensure the fatigue strength of the bearing metal and having a geometry, which enhances a proper oil film build-up and maintenance.

△ Too high top clearance is often the cause of fatigue strength.

The bearings are checked in general by measuring the top clearances.

In service, clearance measurements can be regarded:

1. as a check of the correct re-assembly of the bearing.

   For new bearings the clearances should lie within the limits specified in the instruction book "MAINTENANCE", Item 904 and 905.

2. as an indicator to determine the condition of the bearing at a periodic check without opening up, see Item 7.1.

In both cases, it is vital that the clearance values from the previous check are available for comparison.
Therefore, it is necessary to enter clearances in the engine log book with the relevant date and engine service hours. See e.g. *Plate 70813*.

The initial clearances can be read from the testbed results.

5.7 Wear

Bearing wear is negligible under normal service conditions.
Excessive wear is due to abrasive or corrosive contamination of the system oil which will affect the roughness of the journal / pin and increase the wear rate of the bearing. See Item 7.8.

5.8 Undersize Bearings

a) Crankpin bearings are thin shell bearings.
Due to relatively long production time, the engine builder has a ready stock of semi-produced shells (blanks) that cover a range from nominal diameter to 3 mm undersize, see also Item 6.4.
Semi-produced shells for journals with undersizes lower 3 mm are not stocked as standard.
Furthermore, undersizes lower than 3 mm can also involve modification such as the bolt tension, hydraulic tool, etc.

For advice on the application of undersize bearings, it is recommended to contact the engine builder.

b) The main bearings can be of the thick or thin shell type.
See *Plate 70801*, *70802*.
The information under point a) is also valid here.

c) Crosshead bearings are only available as standard shells, as the reconditioning proposal for offset grinding of the pin facilitates the use of standard shells, see also Item 6.4.
It is recommended to contact the engine builder for advice on such reconditioning.

6. Journals / Pins

6.1 Surface Roughness

Journal / pin surface roughness is important for the bearing condition.
Increased surface roughness can be caused by:

a) Abrasive damage due to contamination of the system oil.
See also Item 7.4 b).

b) Corrosive damage due to sea water or other contamination of the system oil (acidic) or oxidation of the journals due to condensations.
See also Item 7.4 b).

c) Spark erosion (only in main bearings).
See also Item 6.2.

d) Scratches caused by mishandling

With increasing journal / pin roughness, a level will be reached where the oil film thickness is no longer sufficient, causing metal contact between journal / pin and the bearing sliding surface.
This will cause bearing metal adhere to the journal / pin, giving the surface a silvery white appearance.
When such a condition is observed, the journal / pin must be reconditioned by polishing, and the roughness of the surface made acceptable.
In extreme cases, the journal / pin must be ground to an undersize, see also Item 6.4.

6.2 Spark Erosion

Spark erosion is caused by a voltage discharge between the main bearing and journal surface.

The cause of the potential is the development of a galvanic element between the ship's hull, sea water, and the propeller shaft / crankshaft.
The oil film acts as a dielectric.
The puncture voltage in the bearing depends on the thickness of the oil film.

Since the hydrodynamic oil film thickness varies through a rotation cycle, the discharge will take place at roughly the same instant during each rotation cycle, i.e. when the film thickness is at its minimum.
The roughening will accordingly be concentrated in certain areas on the journal surface.

In the early stages, the roughened areas can resemble pitting erosion - but later, as the roughness increases, the small craters will scrape off and pick up bearing metal - hence the silvery white appearance.

Therefore, to ensure protection against spark erosion, the potential level must be kept at maximum 50 mV, which is feasible today with a high efficiency earthing device.
If an earthing device is installed, its effectiveness must be checked regularly.

Regarding repair of the journals, see Item 7.11.
The condition of the bearings must be evaluated to determine whether they can be reconditioned or if they have to be discarded.
It is recommended to contact the engine builder if advice is required.

6.3 Surface Geometry

Surface geometry defects such as lack of roundness, conicity and misalignment may give rise to operational difficulties.
Such abnormal cases of journal / pin geometry and misalignment may occur after a journal grinding repair.
It is recommended to contact the engine builder for advice.

6.4 Undersize Journals / Pins

In case of severe damage to the journal, it may become necessary to recondition the journal / pin by grinding to an undersize.
The final undersize should as far as possible be selected as a half or full millimetre.
This is advisable in order to simplify production and availability of undersize bearings, as for example in the following cases:

a) Main and crankpin journals can be ground to 3 mm undersize:
   Undersize journals bellow this value require special investigations of the bearing assembly.
   It is recommended to contact the engine builder for advice.

b) In service crossheads pins can be:
   1. Polished to (D nominal – 0.15 mm) as the minimum diameter.
   2. Offset to a maximum of 0.3 mm and ground.

   In both cases, since standard bearings are used, the bearing top clearances will increase depending on the surface condition of the pin to be reconditioned.
   The offset value used for grinding must be stamped clearly on the pin.
   It is recommended to contact the engine builder for advice.

7. Practical Information

7.1 Check without Opening up

Follow the check list in accordance with the procedure stated in the instruction book "MAINTENANCE", Chapter 904 and 905.
Enter the results in the engine logbook. See also Item 7.12.

1) Stop the engine and block the main starting valve and starting air distributor.

2) Engage the turning gear.

3) Just after stopping the engine, while the oil is still circulating, check that uniform oil jets appear from all the oil outlet grooves in the crosshead bearing lower shells and the guide shoes.

4) Turn the crank throw for the relevant cylinder unit to suitable position and stop the lube oil circulation pump. (It is recommended to trail the engine for 0.5 ~ 1.0 hour with the pumps off to let the oil drip off.)

5) – Check the top clearance with the measuring tools.
The change in clearances must be negligible when compared with the readings from the last inspection.
If the total increase in top clearance as from new is beyond the tolerance, the bearing should be inspected.

– For guide shoe and guide strip clearance and checking procedure, see the instruction book “MAINTENANCE", Item 904-5.

6) Examine the sides of the bearing shell, guide shoes and guide strips, and check for squeezed-out or loosened metal; also look for white metal fragments in the oil pan.

7) In the following cases, the bearings must be dismantled for inspection, see Item 7.2:

a) Bearing running hot.
b) Oil flows and oil jets uneven, reduced or missing.
c) Increase of clearance since previous reading larger than 0.05 mm. See also Item 7.8.
d) Bearing metal squeezed out, dislodged or missing at the bearing, guide shoe or guide strip ends.

If item 7.a) has been observed excessively in crosshead bearings or crankpin bearings, measure the diameter of the bearing bore in several positions.
If the diameter varies by more than 0.06 mm, send the connecting rod complete to an authorised repair shop.

If Item 7.a), 7.c) or 7.d) are observed when inspecting main bearings, it will be recommended to inspect the two adjacent bearing shells, to check for any abnormalities.

7.2 Open up Inspection and Overhaul (*Plate 70809*)

Record the hydraulic pressure level when the nuts of the bearing cap go loose.

Carefully wipe the running surfaces of the pin / journal and the bearing shell with a clean rag. Use a powerful lamp for inspection.

Assessment of the metal condition and journal surface is made in accordance with the directions given below.
The results should be entered in the engine logbook. See also Item 7.12.

7.3 Types of Damage

The overlayer and baring metal can exhibit the following types of damage.

a) Tearing of the overlayer (crosshead bearing) is due to substandard bonding.
The damage is not confined to specific areas of the bearing surface.
The bearing metal/intermediate layer in the damaged area is seen clearly with a sharply defined overlayer border.
For white metal bearing, this defect is regarded mainly as a cosmetic defect, if it is confined to small areas of the bearing surface without interconnection.

⚠ For tin-aluminium (crosshead) bearing coated overlayer, the total area where the intermediate layer exposed due to overlayer tearing, wiping or wear must not exceed maximum limit given in Item 8.3.

b) Wiping of overlayer manifests itself by parts of the overlayer being smeared out.
Wiping of overlayer can take place when running-in a new bearing; however, if the wiping is excessive, the cause must be found and rectified.
One of the major causes of wiping is pin / journal surface roughness and scratches. See also Item 8.3.

c) Bearing metal wiping is due to metal contact between the sliding surfaces which causes increased frictional heat, resulting in plastic deformation (wiping). See Item 7.4 and Item 7.10 b).
Moderate wiping during the running-in stage is normal, and is considered as a “cosmetic” problem.

7.4 Causes for Wiping

a) Hard contact spots, e.g. originating from:

- Defective pin / journal, bearing, or crosshead guide surfaces.
- Scraped bearing or guide shoe surfaces.
- Hard particles trapped between the housing bore and the back of the shell.
- Fretting on the back of the shell and in the housing bore.

b) Increased pin / journal surface roughness

In most cases the increase in roughness will have occurred in service, and is attributed to:

1. Hard particle ingress:
   Hard particle ingress may be due to the malfunction of filters and/or centrifuges or loosened rust and scales from the piping.
   Therefore, always pay careful attention to oil cleanliness.

2. Corrosive attack:
   - if the oil develops a weak acid.
   - if strong acid anhydrides are added to the oil which, in combination with water, will develop acid.
   - if the salt water content in the lub. oil is higher than 1%.
     The sea water will attack the bearing metal, and result in formation of a very hard black tin-oxide encrustation (SnO) which may scratch and roughen the pin surfaces.
     The formation of tin-oxide is intensified by rust from the bottom tank.
     Therefore, keep the internal surface, especially the "ceiling", clean.

c) Inadequate lube oil supply.

d) Misalignment.

7.5 Cracks

Crack development is a fatigue phenomenon due to increased dynamic stress levels in local areas of the bearing metal.

In the event of excessive local heat input, the fatigue strength of the bearing metal will decrease, and thermal cracks are likely to develop even below the normal dynamic stress level.

A small cluster of hairline cracks develops into a network of cracks.
At an advanced stage, increased notch effect and the influence of the hydrodynamic oil pressure will tear the bearing metal from the steel back and produce loose and dislodged metal fragments.

7.6 Cause for Cracks

a) Insufficient strength of the bonding between the bearing metal and the steel back (tinning or casting error).

b) Crack development after a short working period may be due to misalignment (e.g. a twist between the bearing cap and housing) or geometric irregularities (e.g. a step between the contact faces of the bearing shell, or incorrect oil wedge geometry).

c) High local loading:
for example, if, during running-in, the load is concentrated on a few local high spots of the bearing metal.

⚠ Bearing with cracks can only be repaired temporarily depending on the extent of the damage.

7.7 Repair of Oil Transitions (wedges, tangential run out and bore relief)

△ It is strongly recommended to contact the engine builder for advice before starting any repairs. (See also Item 1.)

Formation of sharp ridges or incorrect inclination of the transition to the bearing surface will seriously disrupt the flow of oil to the bearing surface, causing oil starvation at this location.

Oil transitions are reconditioned by carefully cleaning for accumulated metal with a straight edge or another suitable tool.
Oil wedges should be rebuilt to the required inclination (maximum 1/100) and length, see *Plate 70803*.

⚠ Check the transition geometries before installing the bearings, see Item 14.

7.8 Bearing Wear Rate

The reduction of shell thickness in the loaded area of the main, crankpin and crosshead bearing in a given time interval represents the wear rate of the bearing.
Average bearing wear rate based on service experience is
0.01 mm / 10,000 hours.
As long as the wear rate is in the region of this value, the bearing function can be regarded as normal. See also Item 7.1.

For white metal crosshead bearings, the wear limit is confined to about 50% reduction of the oil wedge length. See *Plate 70803*.
Of course, if the bearing surface is still in good shape, the shell can be used again after the oil wedges have been extended to normal length.
Check also the pin surface condition, see Items 6.1 and 7.9.

For tin-aluminium crosshead bearings, see Item 8.3.

For further advice, please contact the engine builder.

7.9 **Surface Roughness** (journal / pin)

a) Limits to surface roughness
The surface roughness of the journal / pin should always be within the specified limits.

1. For main and crankpin journals:

New engines	0.8 Ra
Roughness approaching (journal to be reconditioned).	1.6 Ra

2. For crosshead pins:

New or repolished	0.05 Ra
Repolishing if over	0.1 Ra

b) Determination of the pin / journal roughness
Measure the roughness with an electronic roughness tester.

7.10 **Repairs of Bearing on the Spot**

△ It is recommended to contact the engine builder for advice before starting any repairs. (See also Item 1.)

a) Overlayer wiping

1. Overlayer wiping and moderate tearing in crosshead bearing lower shells is not serious, and is remedied by careful use of a scraper.
Minimum are shall be scraped off.
For tin aluminium (crosshead) bearing coated overlayer, see Item 8.3.

2. Hard contact on the edges of crosshead bearings is normally due to galvanic build-up of the overlay.
This is occasionally seen when inspecting newly installed bearings and is remedied by relieving these areas with a straight edge or another suitable tool.

b) Bearing metal squeezed out or wiped

1. The wiped metal can accumulate in the oil grooves / wedges, run-out or bore relief where it forms ragged ridges.
Such bearings can normally be used again, provided that the ridges are carefully removed with a suitable scraping tool and the original geometry is re-established. See Item 7.7.
High spots on the bearing surface must be levelled out by light cross-scraping.

⚠ Except for high spots, scraping of the bearing surface is not recommended.

2. In cases of wiping where the bearing surface geometry is to be re-established, it is important:

   – to access the condition of the damaged area and, if found necessary, to check the bearing surface for hairline cracks under a magnifying glass and with a penetrant fluid.
   – to check the surface roughness of the journal / pin.

3. In extreme cases of wiping, the oil wedges in the crosshead bearing may disappear.
   In that event, the shell should be replaced.

c) For evaluation and repair of spark erosion damage, refer to Item 6.2.

d) Cracked bearing metal surface should only be repaired temporarily.
The bearing must be replaced. See Items 7.5 and 7.6.

7.11 Repairs of Journals / Pins

a) Crosshead pins

Pin surface roughness should be better than 0.1 Ra. See Item 7.9.
If the Ra value is higher than 0.1 µm, the pin can often be repolished on the spot, as described below.
If the pin is also scratched, the position and the extent of the scratched areas must be evaluated.
If there are also deep scratches, these must be levelled out carefully with emery paper before the polishing process is started.

The surface roughness not countering in scratches after polishing should be 0.05 Ra in 120° crown.
The upper 240° can be accepted up to an average roughness of 0.2 Ra including scratches.

The following methods are recommended for repolishing on the spot.

1. Polishing with microfinishing film:
   The polishing process is carried out with a "microfinishing film", e.g. 3M aluminium oxide (30 µm and 15 µm), which can be recommended as a fairly quick and easy method, although to fully reestablish the pin surface it will often be necessary to send the crosshead ashore.

   The microfinishing film can be slung around the pin and drawn to and fro by hand and, at the same time, moved along the length of the pin, or it is drawn with the help of a hand drilling machine; in this case, the ends of the microfilm are connected together with strong adhesive tape or glued together.

2. Braided hemp rope method:
   This method is executed with a braided hemp rope and jeweller's rouge.

Before the rope is applied all frontending scratches must be removed with fine emery close.

A mixture of polishing wax and gas oil (forming an abrasive paste of a suitably soft consistency) is to be applied to the rope at regular intervals.
During the polishing operation, the rope must move slowly from one end of the pin to the other.

The polishing is continued until the roughness measurement proves that the surface is adequately smooth. (See Item 7.9.)

This is a very time consuming operation and, depending on the surface roughness in prior, about three to six hours may be needed to complete the polishing.

b) Journals (main and crankpin journals)

1. The methods for polishing of crosshead pins can also be used here, and method 1) Polishing with microfinishing film, will be the most suitable method.
   A 30 µm microfinishing film is recommended here or 220~270 grade emery cloth of goof quality.

2. Local damage to the journal can also be repaired.
   The area is to be ground carefully and the transitions to the journal sliding surface are to be rounded carefully and polished.
   It is recommended to contact the engine builder for advice before such a repair is carried out.
   But as temporary repair the ridges must be filed or ground to level.

7.12 Inspection of Bearings

Regarding check of bearings before installation, see Item 14.

For the ship's own record and to ensure the correct evaluation of the bearings, it is recommended to follow the guidelines for inspection, which are stated in *Plates 70809-70814*.
See the example of an Inspection Record on *Plate 70813*.

8. Crosshead Bearing Assembly

8.1 Bearing Type

The type of bearing used in the crosshead assembly is a thin shell bearing, see Item 5.5.
The lower shell is composed of a steel back with white metal / tin aluminium metal and an overlayer coating. See also Item 3
The lower shells are protected against corrosion with tin flash, see Item 4.
The upper shell is composed of a steel back with cast-on white metal, so it does not have the overlayer coating.
The upper part can also be cast into the bearing cap.

8.2 Bearing Function and Configuration

Because of the oscillating movement and low sliding speed of the crosshead bearing, the hydrodynamic oil film is generated through special oil wedges (see Item 5.3) on either side of the axial oil supply grooves situated in the loaded area of the bearing.
The oil film generated in this manner can be rather thin.
This makes the demands for pin surface roughness and oil wedge geometry very important parameters for the assembly to function.
A further requirement is effective cooling which is ensured by the transverse oil grooves.
The pin surface is superfinished. See Item 7.9.
The lower shell is most often executed with a special surface geometry (embedded arc) which extends over a 120 degree arc, and ensures a uniform load distribution on the bearing surface in contact with the pin.
The lower shell is coated with an overlayer (see Item 3), which enables the pin sliding geometry to conform with the bearing surface in the embedded arch area.

8.3 Replacement Criteria of Tin-Aluminium Bearing

The lower shell for tin-aluminium crosshead bearing has intermediate layer (nickel-barrier) between steel back and tin-aluminium metal.

⚠ If too large an area, nickel barrier, is exposed due to overlayer tearing, wiping or wear, and thus subsequently the journal (crosshead pin) works on the nickel barriers, there can be a risk of damage, as the nickel barrier has poorer bearing properties (higher hardness and lower embedability) than that of original overlayer.

Exposed nickel barrier can be confirmed easily as the nickel barrier has a brighter colour and is harder than the overlayer.
Hardness of the concerned metal can be judged by the knife test, scraping the metal surface slightly.

For tin-aluminium (crosshead) bearing coated overlayer;

a) The bearing should be judged to use continuously by carrying out overhaul and inspection of running surface after first approximately 20,000 hours service.

b) The replacement of bearing is recommended after approximately 35,000~45,000 hours service, irrespective to the inspection result of running surface.

c) If the nickel barrier is exposed in more than approximately 5% of the active working area of the bearing, the replacement of bearing is recommended, though in above-mentioned service time.

d) It is recommended to polish the surface of the crosshead pin at replacement of the bearing, see Item 7.11.

9. Main Bearings

The MC(-C) engine series can be equipped with:
"Thick shell bearings" (Item 5.4) or
"Thin shell bearings" (Item 5.5).

The above bearing type determines the main bearing housing assembly described below (see table of installed bearing types, *Plate 70801*, 70802 and housing assemblies, *Plate 70805*).

For information regarding inspection and repair, see Item 7.

9.1 Thick Shell Bearing Assembly (*Plate 70805*, Fig. 1)

The tensioning force of a thick shell bearing assembly is transferred from the bearing cap ① to the upper shell ② and via its mating faces to the lower shell ③.

The bearing bore is equipped with the following geometry, see *Plate 70801*:

– central oil supply groove and oil inlet in the upper shell which ends in a sloping run-out (Item 5.1) in both sides of the lower shell.
– the bearing bore is furnished with a bore relief (Item 5.2) at the mating faces of the upper and lower shell.

9.2 Thin Shell Bearing Assembly (*Plate 70805*, Fig. 2)

This is a rigid assembly.
The bearing cap ① which has an inclined vertical and horizontal mating face, is wedged into a similar female geometry in the bed plate ②, which, when the assembly is pretensioned, will ensure a positive locking of the cap in the bedplate.

The lower shell is positioned by means of screws ③.
During mounting of the lower shell it is very important to check that the screws are fully tightened to the bedplate.
This is to prevent damage to the screws and shell during tightening of the beating cap.
See also instruction book "MAINTENACE", Chapter 905.

10. Crankpin Bearing Assembly (*Plate 70804*)

This assembly is equipped with a thin shells, and has two or four tensioning studs, depending on the engine type.
Crankpin bearing assemblies with four studs must be tightened in parallel, for example first the two forward studs and then the two aftmost studs; the tensioning may be executed in two or three steps.
This procedure is recommended in order to avoid a twist (angular displacement) of the bearing cap to the mating face on the connecting rod.

The oil is supplied to the bearing surface through the cut-out in both sides of the upper shell.

For information regarding inspection and repair, see Item 7.

11. Guide Shoes and Guide Strips (*Plate 70806*)

a) The guide shoes, which are mounted on the fore and aft ends of the crosshead pins, slide between guides and transform the translatory movement of the piston / piston rod via the connecting rod into a rotational movement of the crankshaft.

   The guide shoe is positioned relatively to the crosshead pin with a positioning pin screwed into the guide shoe, the end of the positioning pin protrudes into a hole in the crosshead pin and restricts the rotational movement of the crosshead pin when the engine is turned with the piston rod disconnected.

b) The guide strips are bolted on to the inner side of the guide shoes and ensure the correct position of the piston rod in the fore-and-aft direction. This alignment and the clearance between the guide strips and guide are made with shims.

The sliding surface of the guide shoes and guide strips are provided with cast-in white metal and furnished with transverse oil supply grooves and wedges (see also Item 5.3, *Plate 70806*).

For inspection of guide shoes and guide strips, see Item 7.1, 7.3 c) and 7.4 a) and the instruction book "MAINTENANCE", Item 904-5.

12. Thrust Bearing Assembly (*Plate 70807*)

The thrust bearing is a tilting-pad bearing of the Michell type.
There are eight pads (segments) or more placed on each of the forward and aft sides of the trust collar.
They are held in place circumferentially by stoppers.
The segments can be compared to sliding blocks and are pivoted in such a manner that they can individually take up the angle of approach necessary for a hydrodynamic lubricating wedge.
The lubricating / cooling oil is sprayed directly on to the forward and aft sides of the thrust collar by means of nozzles positioned in the spaces between the pads.
The nozzles are mounted on a semicircular delivery pipe.

For clearance and maximum acceptable wear, see the instruction book "MAINTENANCE", Item 905-4.

13. Camshaft Bearing Assembly (*Plate 70808*)

a) For the engine except below b) and c):
The camshaft bearing assemblies are positioned between the exhaust and fuel cams of the individual cylinder units.
The bearing assembly is of underslung design, i.e. the shaft rests in rigid bearing caps that are bolted from below to the horizontal face in the cam housings.
The correct position of the caps is ensured by dowel pins.

b) For K98MC, K98MC-C, S90MC-C, S80MC-C, S70MC-C, L70MC-C, S60MC-C, L60MC-C, S50MC-C, S46MC-C engines:
The camshaft bearing assemblies are positioned between the exhaust and fuel cams of the individual cylinder units.
The camshaft is mounted in the camshaft housing from above.
The bearing caps are guided by the housing and fastened by means of two screws.

c) For S42MC, S35MC, L35MC, S26MC engines:
The camshaft bearing assemblies are positioned between each cylinder units.
The camshaft is mounted in the camshaft housing from above.
The bearing caps are guided by the housing and fastened by means of two screws.

The bearings used are of the thin shell type without overlayer (Item 5.5) and the shell configuration can be:

a) a two-shell assembly (upper and lower shell), *Plate 70808*, Fig 1.

b) a one-shell assembly (lower shell only), *Plate 70808*, Fig. 2.

The mating faces of the lower shell rest against the horizontal partition face in the cam housing.
The wall thickness at the mating faces of the shell is reduced to ensure that the inner surface of the shell is flush with the bore in the cam housing.
The transition to the bearing sliding surface is wedge-shaped; this is to ensure unrestricted oil supply to the bearing sliding surface.

The specific load in the camshaft bearings is low, and the bearings function trouble free provided that the lube oil system is well maintained.
However, if practical information is needed, refer to Items 7.1 and 7.2.
For clearances, see the instruction book "MAINTENANCE", Item 906-5.1.

14. Check of Bearings before Installation (*Plate 70827*)

Clean the bearing shells thoroughly before inspecting.

14.1 Visual Inspection

1) Check the condition of the bearing surfaces for impact marks and burrs. Repair by scarping if necessary.

2) Check that the transition between the bore relief and the bearing sliding surface is smooth.

14.2 Check Measurements

Place the shell freely, as illustrated in *Plate 70827*, Fig. 1.

Measure the crown thickness, with a ball micrometer gauge.
Measure in the centre line of the shell, 15 mm from the forward and aft sides.

Record the measurements as described in Item 7.12 and *Plates 70809 ~ 70814*.
This will facilitate the evaluation of the bearing wear during later overhauls.

14.3 Cautions

⚠ As the beating shells are sensitive to deformations, care must be taken during handling, transport and storage, to avoid damaging the shell geometry and surface.

The shells should be stored resting on one side, and be adequately protected against corrosion and mechanical damage.

Preferably, keep new bearing shells in the original packing, and check that the shells are in a good condition, especially if the packing shows signs of damage.

During transport from the store to the engine, avoid any impacts which could affect the shell geometry.

Alignment of Main Bearing

1. Alignment

During installation of the engine, intermediate shaft and propeller shaft, the yard aims to carry out a common alignment, to ensure that the bearing reactions are kept within the permitted limits, with regard to the different factors which influence the vessels and the engine during service.

Factors like the ship's load condition, cold or hot engine, permanent sag of the vessel, movements in sea, wear of bearings etc., makes it necessary to regularly check the alignments.

2. Alignment of Main Bearings

The bearing alignment can be checked by deflection measurements as described in the following Section.

Example; If two adjacent main bearings at the centre of the engine are placed too high, then at this point the crankshaft centreline will be lifted to form an arc.
This will cause the intermediate crank throw to deflect in such a way that it "opens" when turned into bottom position and "closes" in top position.

Since the magnitude of such axial lengthening and shortening increases in proportion to the difference in the height of the bearings, it can be used as a measure of the bearing alignment.

2.1 Deflection Measurements (*Plate 70815*)

As the alignment is influenced by the temperature of the engine and the load condition of the ship, the deflection measurements should, for comparison, always be made under nearly the same temperature and load conditions.

It is recommended to record the actual jacket water and lub. oil temperatures and load condition of the ship in *Plate 70815*.
In addition, they should be taken while the ship is afloat (i.e. not while in dry dock).

Procedure

Turn the crankpin for the cylinder concerned to Pos. B1, see Fig. 2.
Place a dial gauge axially in the crank throw, opposite the crankpin, and at the correct distance from the centre, as illustrated in Fig. 1.
The correct mounting position is marked with punch marks on the crank throw.
Set the dial gauge to "Zero".

Take the deflection readings at the positions indicated in Fig. 2.

"Closing" of the crank throw (compression of the gauge) is regarded as negative and "Opening" of the crank throw (expansion of the dial gauge) is regarded as positive, see Fig. 1.

Since, during the turning, the dial gauge cannot pass the connecting rod at BDC, the measurement for the bottom position is calculated as the average of the two adjacent positions (one at each side of BDC).

When taking deflection readings for the two aftmost cylinders, the turning gear should, at each stoppage, be turned a little backwards to ease off the tangential pressure on the turning wheel teeth.
This pressure may otherwise falsify the readings.

Enter the readings in the table Fig. 3.
Then calculate the BDC deflections, (B1 + B2) / 2, and noted down the result in Fig. 4.

Enter total "vertical deflections" (opening - closing) of the throws, during the turning from bottom to top position in the table Fig. 5 (T - B).

2.2 Checking the Deflections (*Plate 70817* and "INSTRUCTION MANUAL FOR ADJUSTMENT & MEASUREMENT")

The results of the deflection measurements (see *Plate 70815*, Fig. 5) should be evaluated with the test bed measurements (recorded by the engine builder on "INSTRUCTION MANUAL FOR ADJUSTMENT & MEASUREMENT").
If re-alignment has been carried out later on (e.g. following repairs), the results from these measurements should be used.

Values of permissible "vertical deflections" etc. are shown in *Plate 70817*.

Deviation from earlier measurements may be due to:
- human error.
- journal eccentricity.
- floating journals, see Item 2.3.
- the causes mention in Item 2.4.

2.3 Floating Journals

See also Item 2.2 and *Plate 70817*.

Use a special bearing feeler gauge to investigate the contact between the main bearing journals and the lower bearing shells.
Check whether the clearance between journal and lower shell is zero.

If clearance is found between journal and lower bearing shell, the condition of the shell must be checked and, if found damaged, it must be replaced.
The engine alignment should be checked and adjusted, if necessary.

To obtain correct deflection readings in case one or more journals are not in contact with the lower shell, it is recommended to contact the engine builder.

If the deflection values are within limits and there is bottom clearance found, it is possible to install an offset bearing to get a positive reaction.

2.4 Causes of Crankshaft Deflection

a) Excessive wear of main bearing.

b) Displacement of bedplate, see Item 2.5.

c) Displacement of engine alignment and/or shafting alignment.
This normally manifests itself by large alteration in the deflection of the aftmost crank throw. See Item 2.6.

2.5 Piano Wire Measurements

A 0.5 mm piano wire is stretched along each side of the bedplate.
The wire is loaded with 400 N horizontal force.
At the centre line of each cross girder, the distance is measured between the wire and the machined faces of the bedplate top outside oil groove.
It will thus be revealed whether the latter has changed its position compared with the reference measurement from engine installation.

This measurement requires special equipment available from MAN Diesel A/S.

2.6 Shafting Alignment, Bearing Load, “Jack-up” Test

This can be checked by measuring the load at:
– the aftmost main bearing.
– the intermediate shaft bearings (plummer blocks).
– in the stern tube bearing.

Taking these measurements normally requires specialist assistance.

As the reliable evaluation of the shafting alignment measurements requires a good basis, the best obtainable check can be made if the yard or repair shop has carried out the alignment based on precalculation of the bearing reactions.

Circulating Oil and Oil System

1. Circulating Oil (Lubricating and cooling oil)

Engine oil should be of the SAE30 viscosity grade, rust and oxidation inhibited oil.

In order to keep the crankcase and piston cooling space clean of deposits, the oils should have adequate dispersancy / detergency properties.
Alkaline circulating oils are generally superior in this respect.

The table below indicates international brands of oils that have given satisfactory results when applied in MC(-C) engines.
Further information can be obtained by contacting the engine builder or the oil supplier.

COMPANY	CIRCULATING OIL SAE30, TBN 5 ~ 10
BP CASTROL	ENERGOL OE-HT30 MARINE CDX30
CHEVRON CALTEX	VERITAS 800 MARINE OIL 30
EXXON MOBIL	MOBILGUARD 300 MOBILGUARD 312 EXXMAR XA
TOTAL	ATRANTA MARINE D3005 DISOLA M3015
SHELL	MELINA S OIL 30 MELINA OIL 30
NIPPON OIL	MARINE S30 FUKOL SEA ACE 307
IDEMITSU KOSAN	DAPHNE MARINE OIL SS30 DAPHNE MARINE OIL SX30 DAPHNE MARINE OIL SY30
COSMO OIL LUBRICANTS	COSMO MARINE 3005 COSMO MARINE 3010

2. Circulating Oil System

For engine with Uni-Lub system : see *Plate 70818A*, *70819A-B*, *70824A-B*.
For engine without Uni-Lub system : see *Plate 70818B*, *70819A-B*, *70824C*.

Pump ④ draws the oil from the bottom tank and forces it through the lub. oil cooler ⑤, the filter ⑥.

The absolute fineness of full flow filter should be 50 µm.
In case the engines used of tin aluminium bearing, the absolute fineness of full flow filter should be 40 µm.

a) The main part of the oil (divided into Flange "LB") is, via the telescopic pipe, sent to the piston cooling manifold, where it is distributed between piston cooling and bearing lubrication.
From the crosshead bearings, the oil flows through bores in the connecting rods, to the crankpin bearings.

b) The remaining oil (divided into Flange "LA") goes to lubrication of the main bearings, chain drive and thrust bearing.

The relative amount of oil flowing to the piston cooling manifold, and to the main bearings, are regulated by the orifice plate ⑦, if fitted.

Regarding the circulating oil pressure, see Chapter 703.

3. Circulating Oil Failure

3.1 Cooling Oil Failure

The piston cooling oil is supplied via the telescopic pipe fixed to a bracket on the crosshead.
From here it is distributed to the crosshead bearing, guide shoes, crankpin bearing and to the piston crown.

Failing supply of piston cooling oil can cause heavy oil coke deposits in the cooling chambers.
This will result in reduced cooling, thus increasing the material temperature above the design level.
This is detected by the deviation of piston cooling oil outlet temperature.

⚠ In such cases, to avoid damage to the piston crowns, the cylinder loads should be reduced immediately, and the respective pistons pulled at the first opportunity, for cleaning of the cooling chambers.

After remedying a cooling oil failure, it must be checked (with the circulating oil pump running) that the cooling oil connections in the crankcase do not leak, and that the oil outlets from the crosshead, crankpin bearings, and piston cooling, are in order.

3.2 Lubricating Oil Failure

⚠ If the lub. oil pressure falls below the slow down oil pressure level stated in Chapter 703, the engine speed should be reduced immediately to SLOW DOWN level.
Furthermore, the engine's safety equipment shall stop the engine when the shut down oil pressure level has been reached.
Find and remedy the cause of the pressure drop.

Check for traces of melted bearing metal in the crankcase and oil pan.
See also Chapter 702, Checks 2.1 and 2.2.

Feel over 15 ~ 30 minutes after starting, again one hour later, and finally also after reaching full load.
See also Chapter 703, Check 9.

Maintenance of the Circulating Oil

1. Oil System Cleanliness

In a new oil system, as well as in a system which has been drained owing to repair or oil change, the utmost care must be taken to avoid the ingress and presence of abrasive particles, because filters and centrifuges will only remove these slowly, and some are therefore bound to find their way into bearings etc.

△ For this reason, prior to filling-up the system, careful cleaning of pipes, coolers and bottom tank is strongly recommended.

2. Cleaning the Circulating Oil System

The recommendations below are based on our experience, and which give the advice regarding the avoidance of mishaps to a new engine, or after a major repair.

2.1 Cleaning before filling-up

In order to reduce the risk of bearing damage, the normal careful manual cleaning of the crankcase, oil pan, pipes and bottom tank, is naturally very important.
It is equally important that the system pipes and components, between the filter(s) and the bearings, are also carefully cleaned for removal of "welding spray" and oxide scales.

If the pipes have been sand blasted, and thereafter thoroughly cleaned or "acid-washed", then this ought to be followed by "washing-out" with an alkaline liquid, and immediately afterwards the surfaces should be protected against corrosion.

In addition, particles may also appear in the circulating oil coolers, and therefore it is recommended that these are also thoroughly cleaned.

2.2 Flushing Procedure, Main Lub. Oil System

Experience has shown that both during and after such general cleaning, airborne abrasive particles can still enter the circulating oil system.
For this reason, it is necessary to flush the whole system by continuously circulating the oil - while by - passing the engine bearings, etc.

This is done to remove any remaining abrasive particles, and, before the oil is again led through the bearings, it is important to definitely ascertain that the system and the oil have been cleaned adequately.

△ During flushing (as well as during the preceding manual cleaning), the bearings must be effectively protected against the entry of dirt.

The methods employed to obtain effective particle removal during the oil circulation depend upon the actual plant installations, especially upon the filter(s) type, lub. oil centrifuges and the bottom tank layout.

Cleaning is carried out by using the lub. oil centrifuges and by pumping the oil through the filter.
A special flushing filter, with fineness down to 10 ~ 20 µm, is often used as a supplement to or replacement of the system filter.

The following items are by-passed by blanking off with special blanks:
(See also *Plate 70820*.)

- The main bearings,
- The crossheads,
- The thrust bearing,
- The chain drive,
- The turbocharger(s),
- The axial vibration damper,
- The "GEISLINGER" type torsional vibration damper (if installed),
- The moment compensators (if installed),
- PTO/PTI system (if installed).

⚠ It is possible for dirt to enter the crosshead bearings due to the design of the open bearing cap.
It is therefore essential to cover the bearing cap with rubber shielding throughout the flushing sequence.

As the circulating oil cannot by-pass the bottom tank, the whole oil content should partake in the flushing.

During the flushing, the oil should be heated 40 ~ 50 °C and circulated using the full capacity of the pump to ensure that all protective agents inside the pipes and components are removed.

The cleanliness of the lub. oil is checked until it is found to be within the range in NAS 1638, class 10.

In order to improve the cleanliness, it is recommended that the circulating oil centrifuges are in operation during the flushing procedure.
The centrifuge preheaters ought to be used to keep the oil heated to the proper level.

If the centrifuges are used without the circulating oil pumps running, then they will only draw relatively clean oil, because, on account of low oil velocity, the particles will be able to settle at different places within the system.

A portable vibrator or hammer should be used on the outside of the lub. oil pipes during flushing in order to loosen any impurities in the piping system.

⚠ Take care not to brake the pipings.

A flushing log, see *Plate 70822*, is to be using during flushing and for later reference.

As large amount of foreign particles and dirt will normally settle in the bottom tank during and after the flushing (low flow velocity), it is recommended that the oil in the bottom tank is pumped to a separate tank, and then the bottom tank is again cleaned manually.
The oil should be returned to the tank then the flushing is again carried out.

If this bottom tank cleaning is not carried out, blocking up of the filters can frequently occur during the first service period, because settled particles can be dispersed again:
– due to the oil temperature being higher than that during flushing.
– due to actual engine vibrations, and ship movements in heavy seas.

It is recommended to inspect the lub. oil during the flushing, and judge the cleanliness of the lub. oil.

3. Circulating Oil Treatment

3.1 General

Circulating oil cleaning, during engine operation, is carried out by means of an in-line oil filter and the centrifuges, as illustrated on *Plate 70818A* and *70818B*.

The engine as such consumes followings of circulating lub. oil, which must be compensated for by adding new lub. oil:

Engine type	(Guidance value) kg/cyl.·day
K98MC, K98MC-C	7.5 ~ 11
S90MC-C, K90MC, K90MC-C	7 ~ 10
S80MC-C, S80MC, L80MC, K80MC-C	6 ~ 9
S70MC-C, S70MC, L70MC-C, L70MC	5.5 ~ 7.5
S60MC-C, S60MC, L60MC-C, L60MC	5 ~ 6.5
S50MC-C, S50MC, L50MC	4 ~ 5
S46MC-C	3.5 ~ 4.5
S42MC, L42MC	3 ~ 4
S35MC, L35MC	2 ~ 3
S26MC	1.5 ~ 3

It is this continuous and necessary refreshing of the oil that will control the TBN and viscosity on an acceptable equilibrium level as a result of the fact that the oil consumed is with elevated figures and the new oil supplied has standard data.

In order to obtain effective separation in the centrifuges, it is important that the flow rate and the temperature are adjusted to their optimum, as described in the following.

3.2 The Centrifuging Process

Efficient oil cleaning relies on the principle that, provided the through-put is adequate and the treatment is effective, an equilibrium condition can be reached, where the engine contamination rate is balanced by the centrifuge separation rate i.e.:
(Contaminant quantity added to the oil per hour)
= (contaminant quantity removed by the centrifuge per hour)

It is the purpose of the centrifuging process to ensure that this equilibrium condition is reached, with the oil insolubles content being as low as possible.

Since the cleaning efficiency of the centrifuge is largely dependent upon the flow-rate, it is very important that this is optimised.
The above considerations are further explained in the following.

3.3 The System Oil Volume in relation to the Centrifuging Process

As mentioned above, a centrifuge working on a charge of oil will, in principle, after a certain time, remove an amount of contamination material per hour which is equal to the amount of contamination material produced by the engine in the same span of time.

This means that the system (engine, oil and centrifuges) is in equilibrium at a certain level of oil contamination (Peq) which is usually measured as pentane insoluble %.

In a small oil system (small volume), the equilibrium level will be reached sooner than in a large system (Fig. 1), but the final contamination level will be the same for both systems, because in this respect the system oil acts only as a carrier of contamination material.

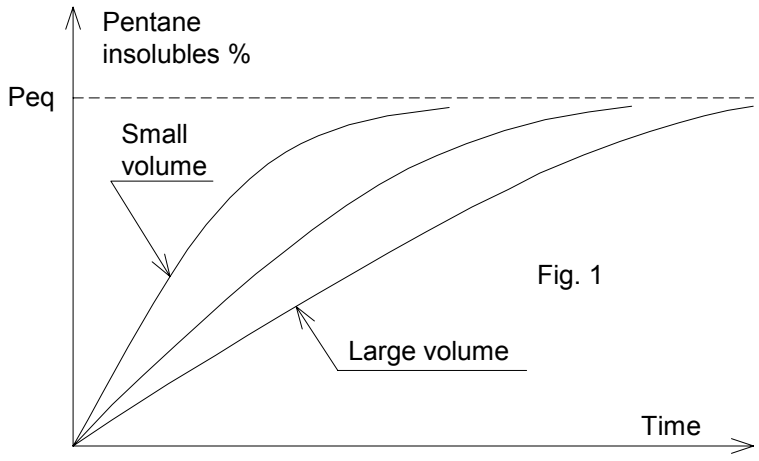

Fig. 1

A centrifuge can be operated at greatly varying flow rates (Q).

Practical experience has revealed that the content of pentane insolubles, before and after the centrifuge, is related to the flow rate as shown in Fig. 2.

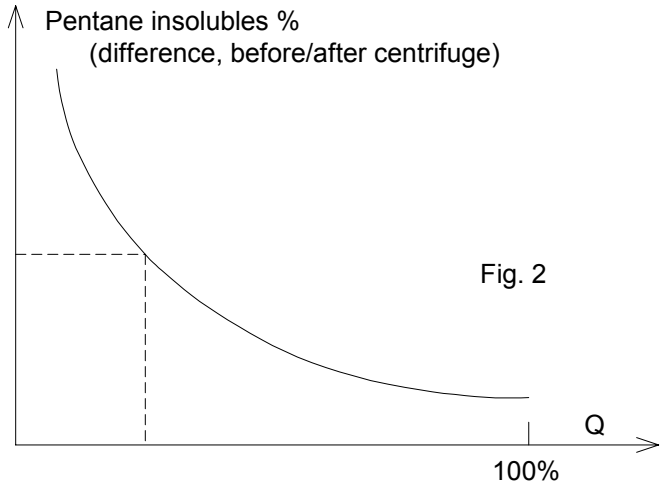

Fig. 2

Fig. 2 illustrates that the amount of pentane insolubles removed will decrease with rising Q.
It can be seen that:

– Al low Q, only a small portion of the oil is passing the centrifuge / hour, but is being cleaned effectively.
– At high Q, a large quantity of oil is passing the centrifuge / hour, but the cleaning is less effective.

Thus, by correctly adjusting the flow rate, an optimal equilibrium cleaning level can be obtained (Fig. 3).

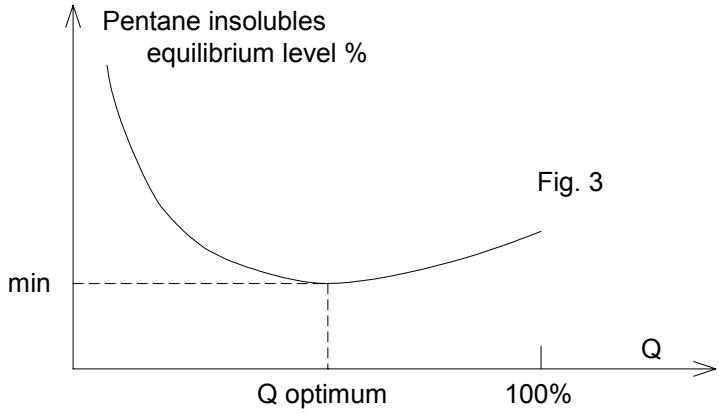

Fig. 3

This minimum contamination level is obtained by employing a suitable flow rate that is only a fraction of the stated maximum capacity of the centrifuge (see the centrifuge manual).

3.4 Guidance Flow Rates

The ability of the system oil to "carry" contamination products is expressed by its detergency / dispersancy level.

This means that a given content of contamination - for instance 1% pentane insolubles - will, in a detergent oil, be present as smaller, but more numerous particles than in a straight oil.

Furthermore, the particles in the detergent oil will be surrounded by additives, which results in a specific gravity very close to that of the oil itself, thereby hampering particle settling in the centrifuge.

This influences the position of the minimum in Fig. 3, as illustrated in Fig. 4.

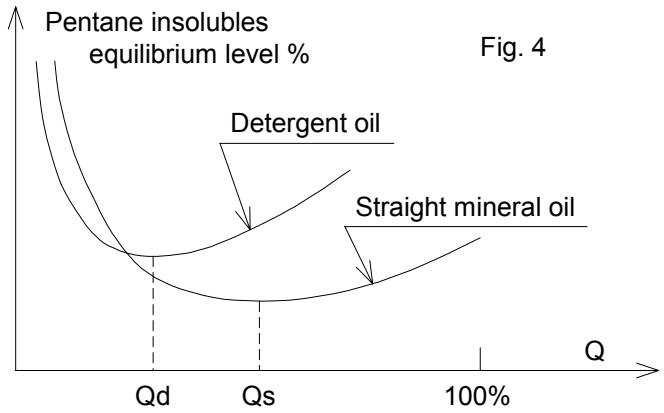

Fig. 4

As can be seen, the equilibrium level in a detergent oil will be higher than in a straight oil, and the optimum flow rate will be lower.

However, since the most important factor is the particle size (risk of scratching and wear of the bearing journals), the above mentioned difference in equilibrium levels is of relatively minor importance, and the following guidance figures generally can be used:

- the optimum centrifuge flow rate for a detergent oil is about 20 ~ 25% of the maximum centrifuge capacity,
- whereas, for a straight oil, it is about 50 ~ 60%.
- This means that for most system oils of today, which incorporate a certain detergency, the optimum will be at about 30 ~ 40% of the maximum centrifuge capacity.

The preheating temperature should be about 80 °C.

4. Oil Deterioration

4.1 General

Oil seldom loses its ability to lubricate, i.e. to form an oil film which reduces friction, but it can become corrosive.

If this happens, the bearing journals can be attacked, such that their surfaces become too rough, and thereby cause wiping of the bearing metal.
In such cases, not only must the bearing metal be renewed, but also the journals (silvery white from adhering white metal) will have to be re-polished.

Lubricating oil corrosiveness is either due to:
– advanced oxidation of the oil itself (TAN; Total Acid Number), or,
– the presence of inorganic acids (SAN; Strong Acid Number).

In both cases the presence of water will multiply the effect, especially an influx of sea water.

4.2 Oxidation of Oils

At normal service temperature the rate of oxidation is insignificant, but the following three factors will accelerate the process:

a) High Temperature
The temperature level will generally increases if the coolers are not effective.

Local high-temperature areas will arise in pistons, if circulation is not continued for about 15 minutes after stopping the engine.
The same will occur in electrical preheaters, if circulation is not continued for 5 minutes after the heating has been stopped, or if the heater is only partly filled with oil (insufficient venting).

b) Air Admixture
Good venting of the bottom tank should be arranged.

The total oil quantity should be such that it is not circulated more than about 13 ~ 14 times per hour.
This ensures that sufficient time exists for deaeration during the period of "rest" in the bottom tank.

It is important that the whole oil content takes part in the circulation, i.e. stagnant oil should be avoided.

c) Catalytic Action
Oxidation will be considerably accelerated if oxidation catalysts are present in the oil.

In this respect, wear particles of copper are especially bad, but also ferrous wear particles and rust are active.
In addition, lacquer and varnish-like oxidation products of the oil itself have an accelerating effect.
Therefore, continuous cleaning is important to keep the "sludge" content low.

As water will evaporate from the warm oil in the bottom tank, and condense on the tank ceiling, rust is apt to develop here and fall into the oil, thereby tending to accelerate oxidation.
This is the reason for advocating the measures mention in Chapter 702, check 3.5, concerning cleaning and rust prevention.

4.3 Signs of Deterioration

△ If oxidation becomes grave, prompt action is necessary.
Because, the final stages of deterioration can develop and accelerate very quickly, i.e. within one or two weeks.

Even if this seldom happens, it is prudent to be acquainted with the following signs of deterioration, which may occur singly or in combinations.
- The sludge precipitation in the centrifuge multiplies.
- The smell of the oil becomes bad (acrid or pungent).
- Machined surfaces in crankcase become coffee-brown (thin layer of lacquer).
- Paint in crankcase peels off, or blisters.
- Excessive carbon deposits (coke) are formed in piston cooling chambers.

In serious cases of oil deterioration, the system should be cleaned and flushed thoroughly, before fresh oil is filled into it.

4.4 Water in the Oil

△ Water contamination of the circulating oil should always be avoided.

The presence of water, especially salt water, will:
- accelerate oil oxidation (tend to form organic and inorganic acids)
- tend to corrode machined surfaces and thereby increase the roughness of bearing journals and piston rods, etc.
- tend to form tin-oxide on white metal, see "BEARINGS", Item 8.

In addition fresh water contamination can enhance the conditions for bacteriological attack.

For alkaline oils, a minor increase in the fresh water content is not immediately detrimental, as long as the engine is running, although it should, as quickly as possible, be reduced again to below 0.2% water content.

If the engine is stopped with excess water in the oil, then once every hour, it should be turned a little more than 1/2 revolution (to stop in different positions), while the oil circulation and centrifuging (at preheating temperature) continue to remove the water.
This is particularly important in the case of sea water ingress.

Water in the oil may be noted by "dew" formation on the sight glasses, or by a milky appearance of the oil.
Its presence can also be ascertained by heating a piece of glass, or a soldering iron, to 200 ~ 300 °C and immersing it in an oil sample.
If there is a hissing sound, water is present.

If a large quantity of (sea) water has entered the oil system, it may be profitable to suck up sedimented water from the bottom of the tank.

In extreme cases it may be necessary to remove the oil / water mixture, and clean and/or flush the system, before filling up again with the cleaned oil, or the new oil.

4.5 Check on Oil Condition

As described in the Item 4.3 and 4.4, the on board surveillance of oil condition involves keeping a check on:

- alterations in separated sludge amount.
- appearance and smell of the oil.
- "dew" on sight glasses.
- lacquer formation on machined surfaces.
- paint peeling and/or blistering.
- "hissing" test.
- carbon deposits in piston crown.

In addition to the above, oil samples should be sent ashore for analysis at least every three months.
The samples should be taken while the engine is running, and from a test cock on a main pipe through which the oil is circulating.

Kits for rapid on-board analyses are available from the oil suppliers.
However, such kits can only be considered as supplementary and should not replace laboratory analyses.

5. Circulating Oil: Analyses and Characteristic Properties

Used-oil analysis is most often carried out at oil company laboratories.
It is normal service for these to remark upon the oil condition, based upon the analysis results.

The assessment of oil condition can seldom be based on the value of a single parameter, i.e. it is usually important, and necessary, to base the evaluation on the overall analysis specification.
For qualified advice it is recommended consultation with the Oil Company and the engine builder.

The report usually covers the following characteristics.
The following limiting values are given for reference / guidance purpose only.

Property	Remarks	Guiding Limits for used oil
Oil Type	Alkaline detergent (for 2-stroke engines)	
Specific Gravity	Usually 0.90 ~ 0.98. Mainly used for identification of the oil.	± 5% (of initial value)
Viscosity	The viscosity increases with oil oxidation, and also by contamination with cylinder oil, heavy fuel, or water. A decrease in the viscosity may be due to dilution with diesel oil.	max. + 40% min. – 15% (of initial value)
Flush Point (open cup)	Lowest temperature at which the oil gives off a combustible vapour. Gives an indication of possible fuel oil contamination.	min. 180 °C
TAN (Total Acid Number)	This expresses the total content of organic and inorganic acids in the oil. Organic (or weak) acids are due to oxidation. TAN = SAN + Weak acid number	max. 2
SAN (Strong Acid Number)	This expresses the amount of inorganic (or strong) acids in the oil. There are usually sulphuric acid from the combustion chamber, or hydrochloric acid arising from sea water (ought to be stated in the analysis). SAN makes the oil corrosive (especially if water is present) and should be zero.	0
Alkalinity / TBN (Total Base number)	Gives the alkalinity level in oils containing acid neutralising additives.	max. + 100% min. – 30% (of initial values)
Water	Sea water has a higher corrosive effect than fresh water. See Item 4.4.	fresh: 0.2%, (0.5% for short periods) Saline: trace
Conradsen Carbon	Residue from incomplete combustion, or cracked lubricating and cylinder oil.	max. + 3%
Ash	Some additives leave ash, which may thereby be used to indicate the amount of additives in the oil. The ash can also consist of wear particles, sand and rust. The ash content of a used oil can only be evaluated by comparison with the ash content of the unused oil.	max. + 2%
Insolubles	Usually stated as pentane (or heptane) and benzene insolubles. The amount of insoluble ingredients in the oil is checked as follows: Equal parts of the oil sample are diluted with normal pentane C_5H_{12} (or normal heptane C_7H_{16}) and benzene C_6H_6. As oxidised oil (lacquer and varnish-like components) is only soluble in benzene, and not in normal pentane (or normal heptane), the difference in the amount of insolubles is indicative of the degree of oil oxidation. The benzene insolubles are the solid contaminants. ⚠ As a substitute for the benzene, the toluene $CH_3C_6H_5$ should be used because the benzene has carcinogenicity.	Pentane insolubles, non-coagulated; max. 2% Benzene insolubles, non-coagulated; max. 1%

6. Cleaning of Drain Oil from Piston Rod Stuffing Boxes (*Plate 70823*)

The oil which is drained off from the piston rod stuffing boxes is mainly circulating oil with an admixture of partly-used cylinder oil and, as such, it contains sludge from the scavenge air space.

The amount of drain oil from the stuffing boxes has been reduced considerably, being only about 5 ~ 10 liter/day per cylinder during normal service, however, in the running-in period, it can be higher.
Therefore, it is recommended that this relatively small amount of drain oil is burnt in the incinerator.

If the drain oil is to be re-used as lub. oil, it will be necessary to install the cleaning installations (OPTION) as shown in *Plate 70823*:

The drain oil is collected in tank No. 1.
When the tank No.1 is nearly full, the oil is transferred, via the purifier, to tank No. 2, and thereafter, via the purifier, recirculated a number of times.

When centrifuging the stuffing box drain oil, the flow rate should be decreased to about 50% of what is normally used for the circulating oil, and the preheating temperature raised to about 90 °C.
This is because, in general, the drain oil is a little more viscous than the circulating oil, and also because part of the contamination products consist of oxidised cylinder oil, with a specific gravity which does not differ much from that of the circulating oil itself.

Water-washing should only be carried out if recommended by the oil supplier.

Finally, the centrifuged oil, in tank No. 2, should be filtered a number of times through the fine filter, at a temperature of 60 ~ 80 °C.
This will remove any very fine soot and oxidation products not taken out by the purifier, and thus make the oil suitable for returning to the circulating system.

Provided that the circulating oil is an alkaline detergent type, it is not necessary to analyse each charge of cleaned drain oil before it is returned to the system.
Regular sampling and analysis of the circulating oil and drain oil will be sufficient.

If, however, the circulating oil is not alkaline, all the cleaned drain oil should be checked for acidity, for instance by means of an analysis kit, before it is returned to the system.

The TAN (Total Acid Number) should not exceed 2. See also Item 5.
If the TAN exceeds 2, the particular charge of drain oil should be disposed of.

Camshaft Lub. Oil System

Engines with Uni-Lub. System

1. System Details (*Plate 70824A* and *70824B*)

The camshaft bearings, roller guides and exhaust valve actuators are supplied oil by the main lub. oil system.
From the bearings, cams, roller guides and exhaust valve actuators, the oil drains to the bottom of the bearing housings.
From here, the lub. oil is drained back to the bottom tank.

2. Pressure Adjustment

If the booster pumps are fitted, the below procedure should be followed:

1) Start the main lub. oil pumps and booster pump No. 1.

2) Set the pump by-pass valve to open at the maximum working pressure of the pump - not, however, below 0.3 MPa.
Adjust in steps (while the outlet valve is slowly closed and opened) until the pressure, with closed valve, has the above-mentioned value.

Adjust booster pump No. 2, using same method.

3) Adjust the pressure control valve so as to obtain the pressure specified in Chapter 703.

4) When the engine is running, it may become necessary to readjust the pressure control valve, to maintain the required pressure.

3. Flushing Procedure

Follow these instructions together with the instructions give in this Chapter, "Maintenance of the Circulating Oil", Item 2.2.

1) Remove the inspection hole cover on each camshaft roller guide housing.

2) Remove the oil inlet pipes to all camshaft roller guide sections and exhaust valve actuators.

3) Connect a flexible hose with a valve to the open end of the lub. pipes, and suspend the flexible hose through the open inspection hole into the corresponding camshaft oil pan.

4) If the booster pumps are fitted, keep them running during the flushing procedure.

5) After flushing, open the lub oil pipe blank flanges and any other possible "blind ends" for inspection and manual cleaning.

6) Use the flushing log, *Plate 70822*, during flushing and for later reference.

Separate Camshaft Lub. Oil System

Engines without Uni-Lub. System - OPTION

1. System Details (*Plate 70824C*)

The engine is provided with a separate forced lubrication system which supplies oil to the camshaft bearings, roller guides and exhaust valve actuators.

This oil is taken from a separate tank by one of the two circulating pumps, and is then passed through a cooler and a filter.
The absolute fineness of full flow filter should be 50 µm.

From the bearings, cams and roller guides, the oil drains to the bottom of the bearing housings.
The lub. oil is drained back to the camshaft lub. oil tank through a magnetic filter.

The cleaning of the camshaft oil is done by the by-pass fine filter unit which is connected to the camshaft lub. oil tank.
The lub. oil is drawn from the bottom of the tank by a pump and is returned to the tank through a fine filter.
Regarding the detail of by-pass filter, refer to the instruction manual of the filter.

The system is fitted with pressure-switches, which are activated at low oil pressure for signal to an alarm device and for automatic start of the stand-by pump.

2. Pressure Adjustment

The oil pressure is adjusted in the following way:

1) Open the valves in the system and start pump No. 1.

2) Check that the oil circulates and that there is sufficient oil in the tank.

3) Set the pump by-pass valve to open at the maximum working pressure of the pump - not, however, higher than 0.4 MPa.
Adjust in steps (while a valve in the pressure piping is slowly closed and opened) until the pressure, with closed valve, has the above-mentioned value.

Make the same adjustment with pump No. 2.

3. Camshaft Oil

The same oil as in the engine circulating system is normally used.

3.1 Fuel Contamination

△ Regularly check the camshaft lub. oil for fuel contamination, and change it if the fuel content exceeds 10%.
Checking is recommended at intervals of maximum three months.

The dilution will be indicated by:
– increasing oil level in the tank,
– smell of the oil,
– increasing oil viscosity (in the case of HFO contamination).

It can also be "measured" by a flash-point test, but this can only be done ashore.

Before the oil is returned to the system, it should be checked for the possible fuel oil content.

3.2 Water Contamination

Also regularly check the oil for the water contamination.
The water has to be removed from the oil by means of centrifuging soon as possible.

Water ingress is indicated by;
– Increasing level in the oil tank,
– Discoloration of the lub. oil,
– Sudden (momentary) increase of pressure differential across the by-pass filter.

3.3 Flushing Procedure

In principle, the flushing procedure for the main lub. oil system is used, with the following modifications.

1) Remove one inspection hole cover on each camshaft roller guide housing.

2) Remove the oil inlet pipes to all camshaft roller guide sections and exhaust valve actuators.

3) Connect a flexible hose with a valve to the open end of the lub. oil pipe, and suspend the flexible hose through the open inspection hole into the corresponding camshaft oil pan.

4) To improve the cleanliness, it is recommended to operate CJC filter (fine filter) or an additional 6 ~ 10 μm filter.

5) After flushing, open the lub oil pipe blank flanges and any other possible "blind ends" and the camshaft lub. oil tank for inspection and manual cleaning.

6) Flushing log, see *Plate 70822*, is to be used during flushing and for later reference.

Turbocharger Lubrication

See *Plate 70826A* and *70826B*

1. TCA Type, NA Type Turbocharger

The TCA type and NA type of turbochargers are lubricated via the main lub. oil system

The oil is discharged to the main lub. oil bottom tank.
The discharge line is connected to the venting pipe, which leads to the deck.

In case of failing lub. oil supply from the main lub. oil system, e.g. due to a power black-out or defects in the system, lubrication of the turbocharger bearing is ensured by a separate tank mounted on top of the turbocharger

2. TPL Type Turbocharger

The TPL type of turbochargers are also lubricated via the main lub. oil system.
Refer to the instruction boos “COMPONENT DESCRIPTION (ACCESSORIES)”.

3. VTR Type Turbocharger

The VTR type of turbochargers are designed with an integrated lub. oil system.
Refer to the instruction boos “COMPONENT DESCRIPTION (ACCESSORIES)”.

4. MET Type Turbocharger

The MET type of turbochargers are also lubricated via the main lub. oil system.
Refer to the instruction boos “COMPONENT DESCRIPTION (ACCESSORIES)”.

Plate 70801 Main Bearing, Thick Shell Design

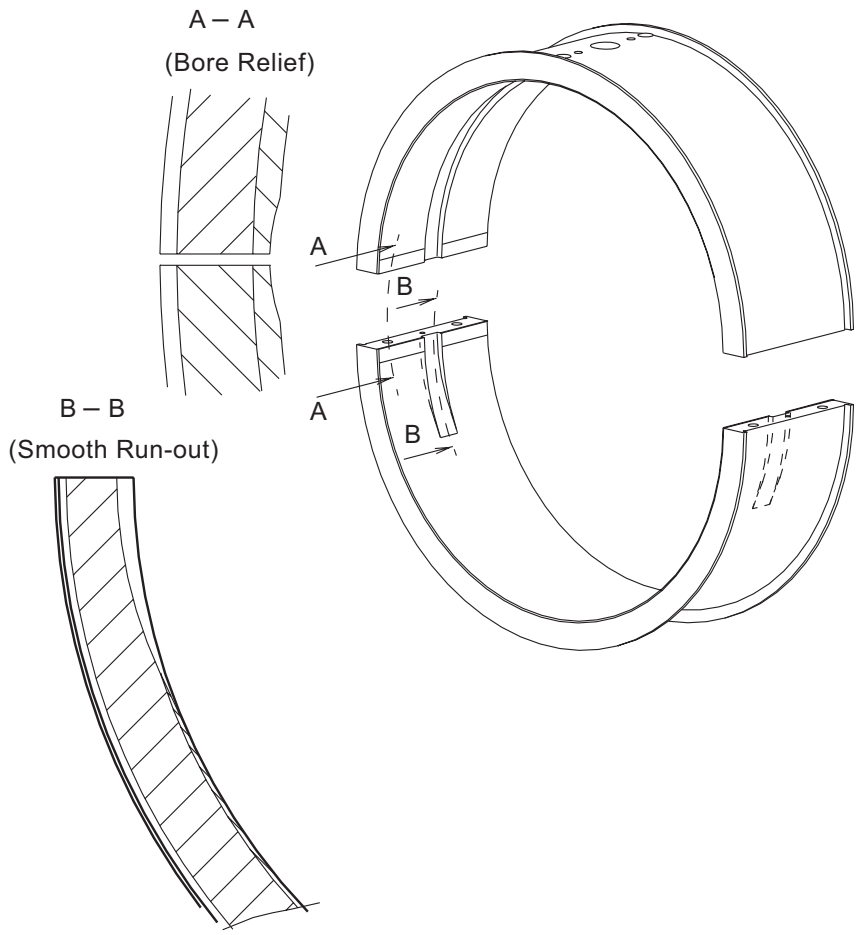

Engine Types with thick shell main bearing assemblies :

K90MC
S80MC, L80MC
S70MC, L70MC
S60MC, L60MC
S50MC, L50MC

Plate 70802 Main Bearing, Thin Shell Design

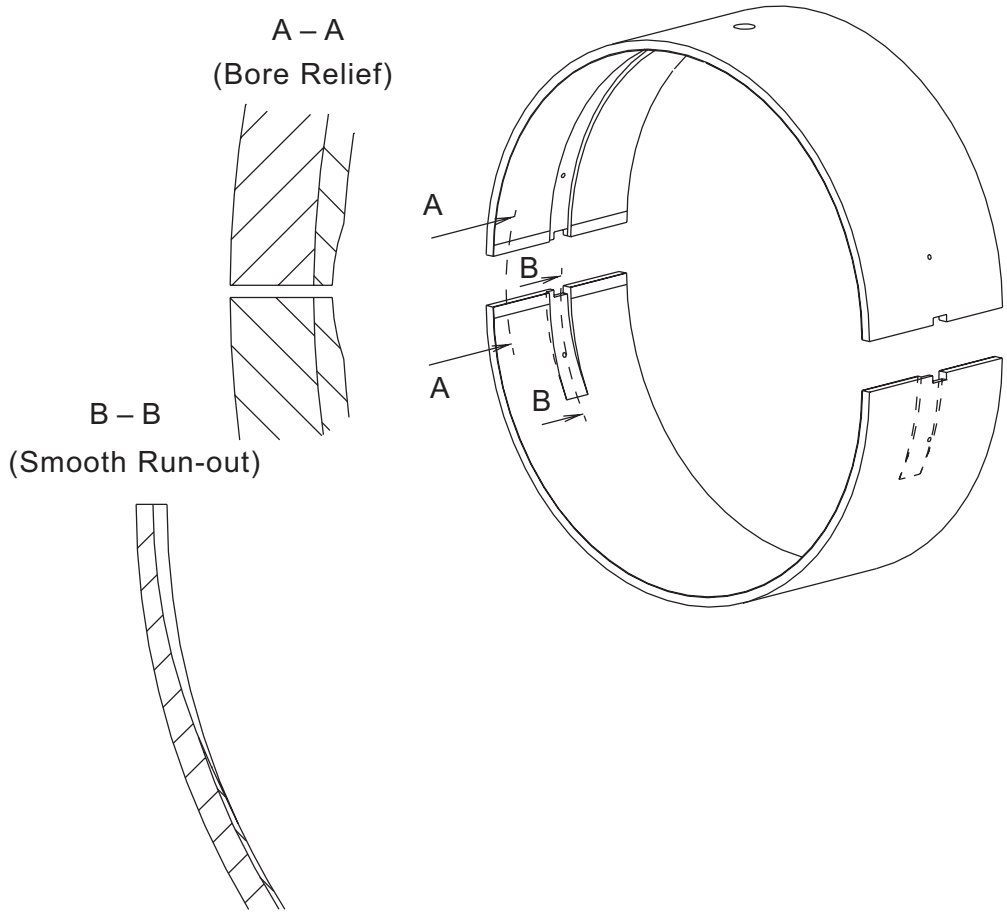

Engine Types with thin shell main bearing assemblies :

K98MC, K98MC-C
S90MC-C, K90MC-C
S80MC-C, K80MC-C
S70MC-C, L70MC-C
S60MC-C, L60MC-C
S50MC-C
S46MC-C
S42MC, L42MC
S35MC, L35MC
S26MC

Plate 70803 Crosshead Bearing

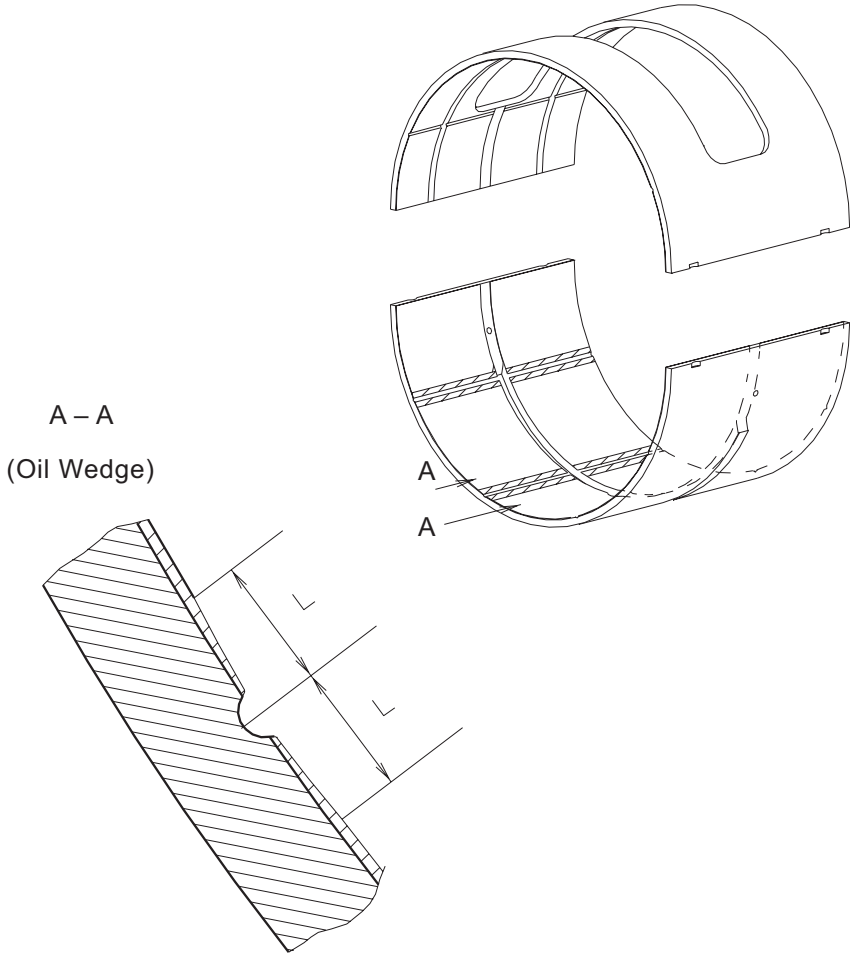

Extent of oil wedge in crosshead bearing lower shell

Engine Type	Extent L (mm) *
K98MC, K98MC-C	18
S90MC-C, K90MC, K90MC-C	18
S80MC-C, S80MC, L80MC, K80MC-C	15
S70MC-C, S70MC, L70MC-C, L70MC	15
S60MC-C, S60MC, L60MC-C, L60MC	15
S50MC-C	10
S50MC, L50MC	15
S46MC-C	10
S42MC	10
L42MC	12
S35MC, L35MC	10
S26MC	7.5

* On each side of the axial oil groove.

B – B
(Tang. Run-out)

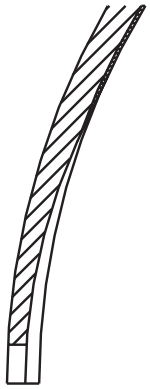

A – A
(Bore Relief)

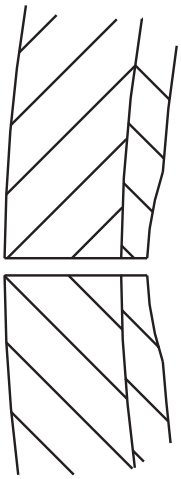

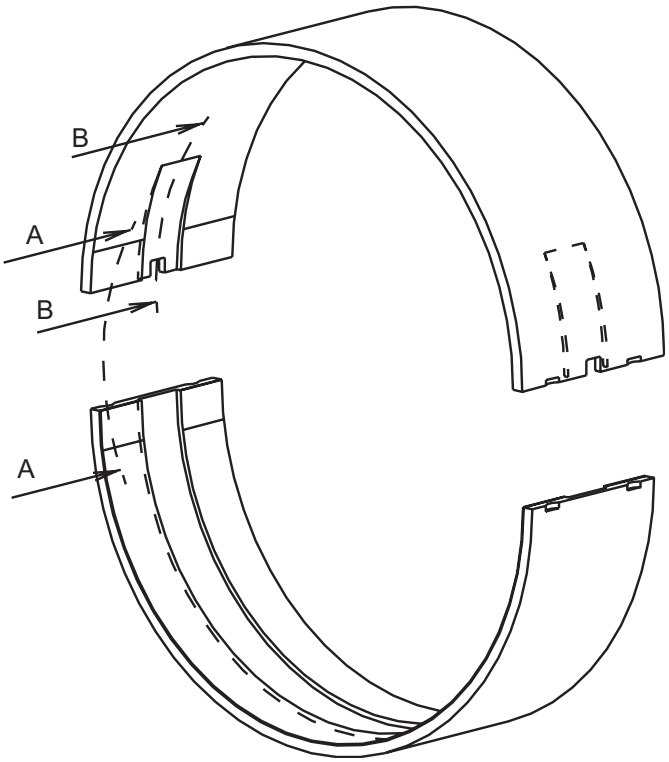

Fig. 1 Thick Shell

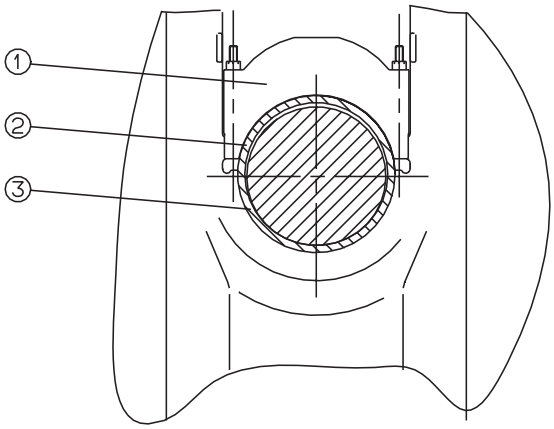

Fig. 2 Thin Shell

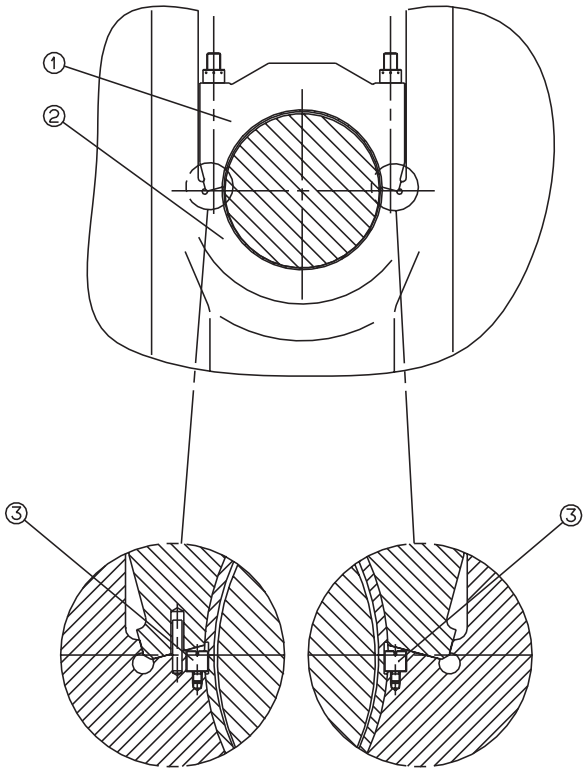

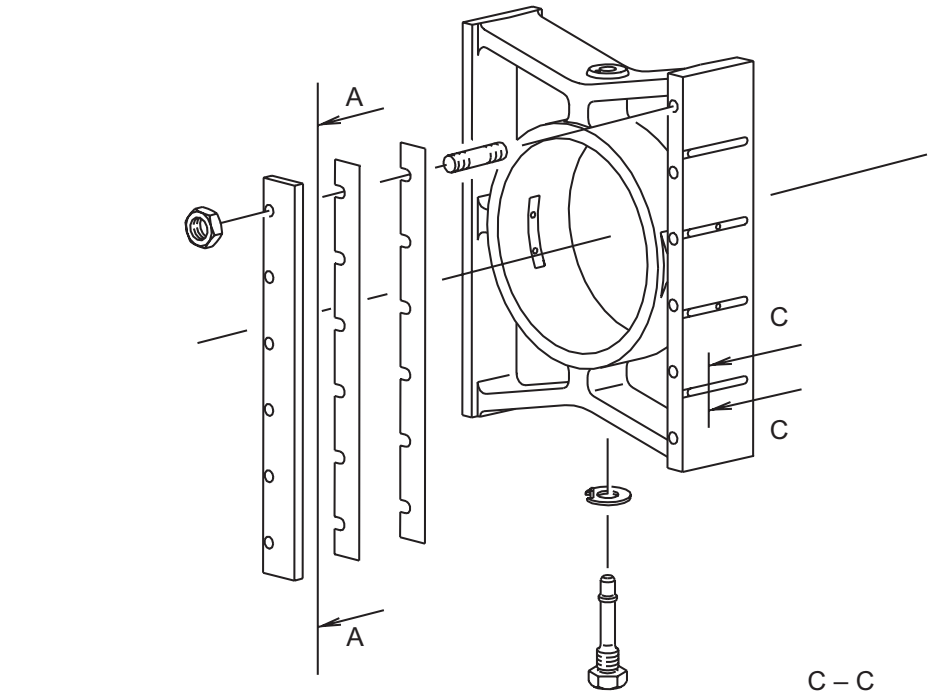
A
A
C
C

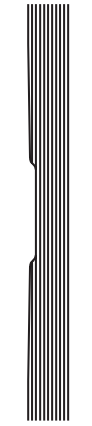
B – B

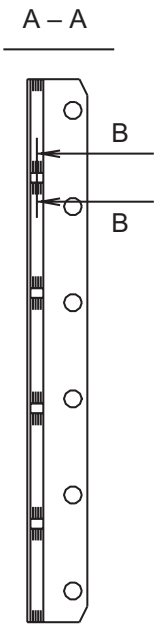
A – A
B
B

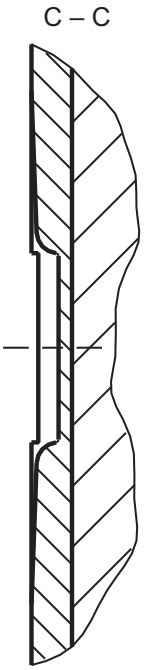
C – C

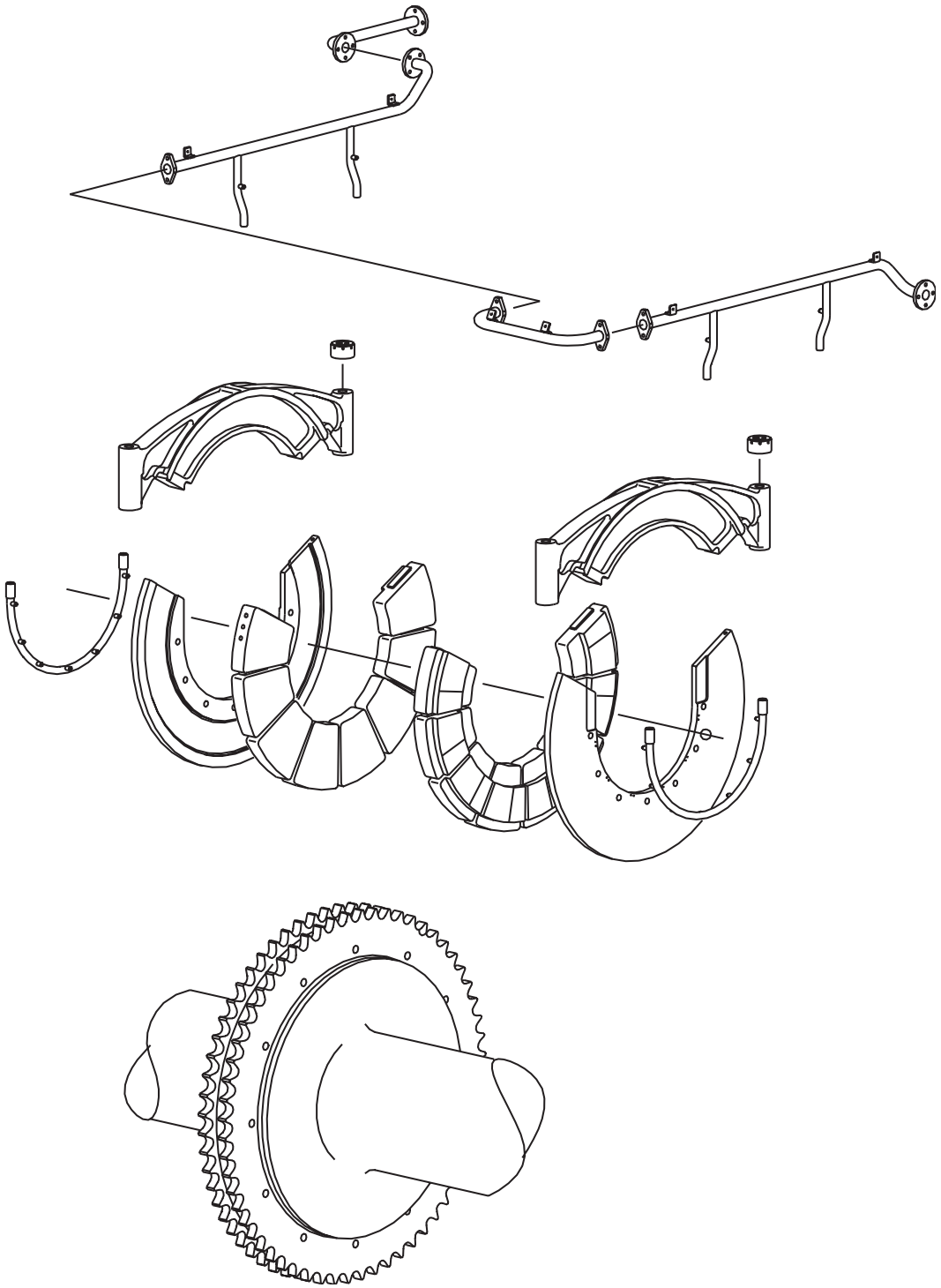

Fig. 1 Two-Shell Assembly

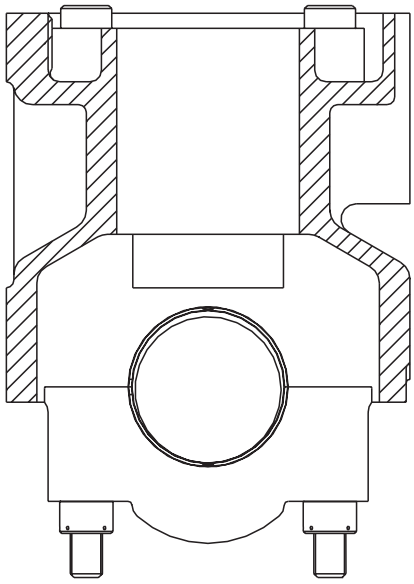

Fig. 2 One-Shell Assembly

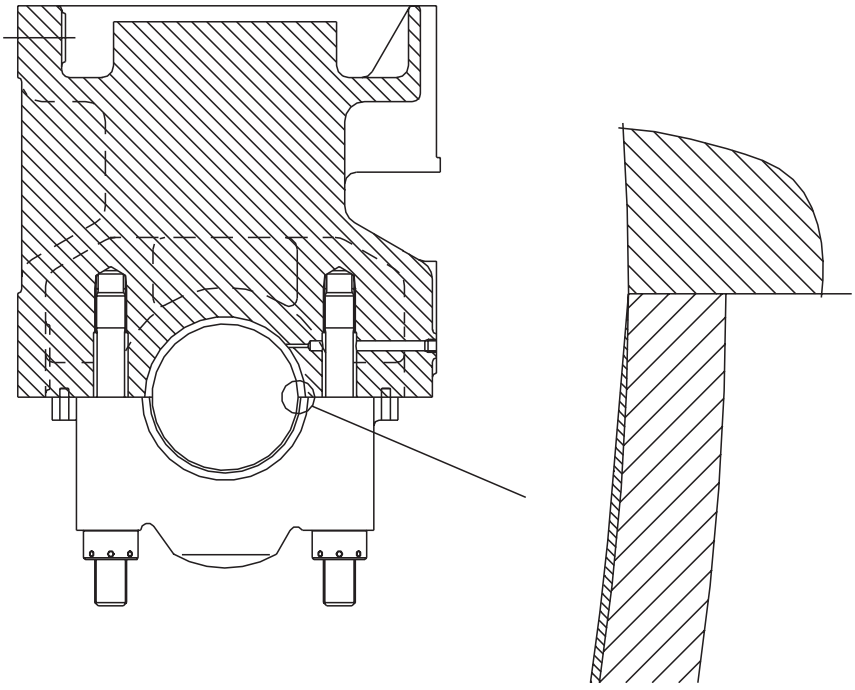

Plate 70809 Inspection of Bearings

References to Separate Instruction Book "MAINTENANCE"		
Bearing Type	**Inspection without Opening-up**	**Open-up Inspection and Overhaul**
Main bearing	905-2	905-3
Crankpin bearing	904-6	904-6
Crosshead bearing	904-2.1	904-2.2
Guide shoes	904-5	–
Crosshead guides	904-5	–
Thrust bearing	–	905-4
Camshaft bearing	906-5.1	906-5.2

Recording of observations

Use the Inspection Sheet, *Plate 70814*. For help, refer to example, *Plate 70813*.

a) Inspection without Opening-up

State the following information :
Date / Signature / Engine running hours / Type of inspection / Bearing type (*Plate 70809*, Table 1) / Bearing number / Observation (*Plate 70812*, Table 3) / Remarks / Clearances.

b) Open-up Inspection and Overhaul

State the following information :
Date / Signature / Engine running hours / Type of inspection / Bearing type (*Plate 70809*, Table 1) / Bearing number / Manufacture's logo / Damage to (*Plate 70809*, Table 2) / Observation (*Plate 70812*, Table 4) / Site and extent of damage (*Plate 70810-70811*) * / Remarks / Clearances / Hydraulic opening pressure / Roughness.

* The site and extent of the damage is determined by :

1) The approx. centre of the damaged are (see example I, II and III).
The axial location (l) of the centre should be stated in (mm) from the aft end of the bearing or the journal.

2) The extent of the damage defined by a circle with radius (r); or a rectangle (a, b) or (a, b, +/- c), (see example I, II and III)

Note : For isolated cracks, illustration III is used, with the measurement **b** omitted.

Table 1 :

Bearing Type	
Main Bearing	MB
Crankpin Bearing	CRB
Crosshead Bearing	CHB
Guide Shoes	GS
Crosshead Guides	CG
Thrust Bearing	TB
Camshaft Bearing	CSB

Table 2 :

Damage	
Overlayer	OL
White Metal	WM
Journal	J
Pin	P
Transition:	
Oil Wedge	OW
Bore Relief	BR
Tang. Run-out	TR
Back of Shell	BS

Inspection of bearing
(Location of damege and sizering

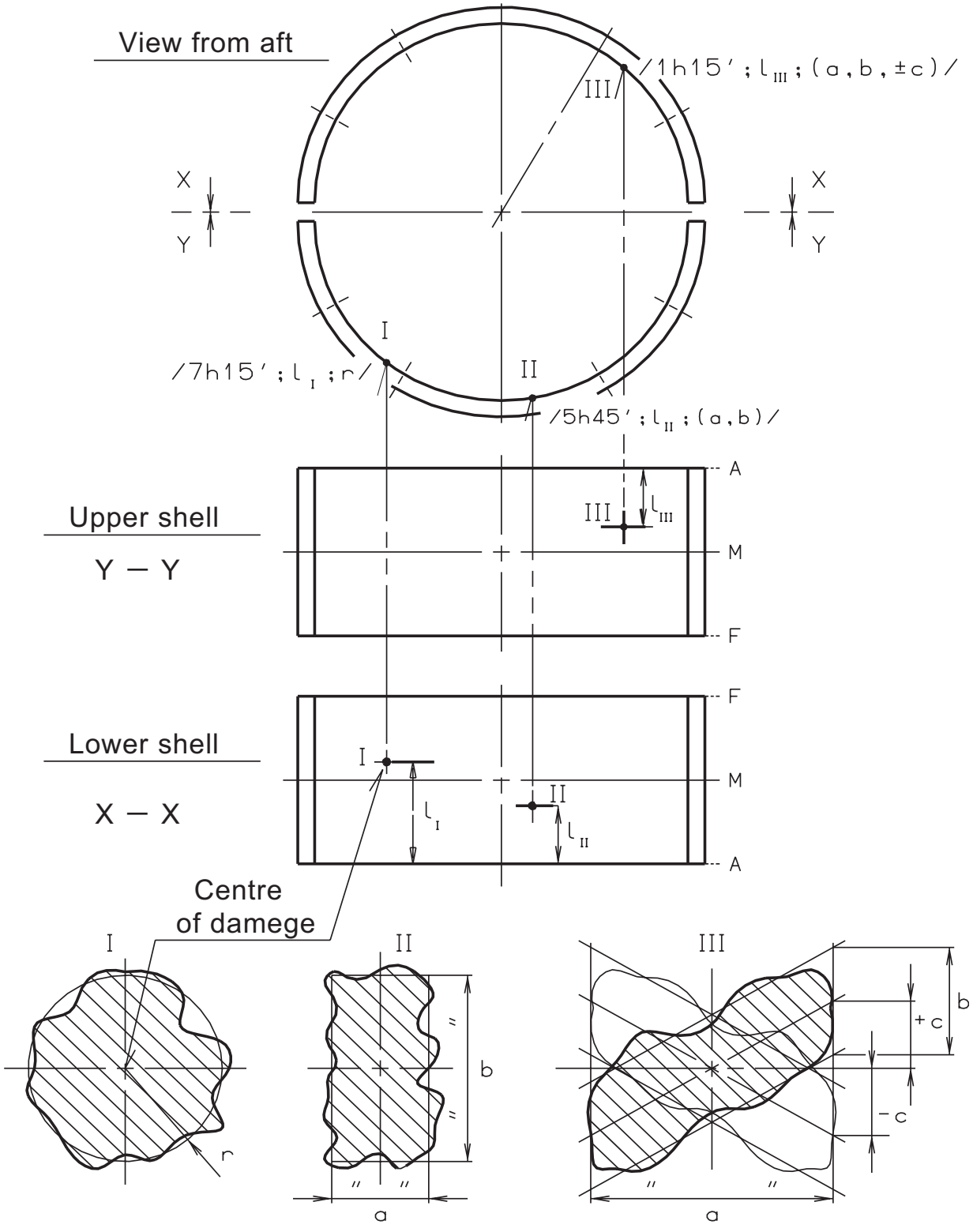

Crosshead pin

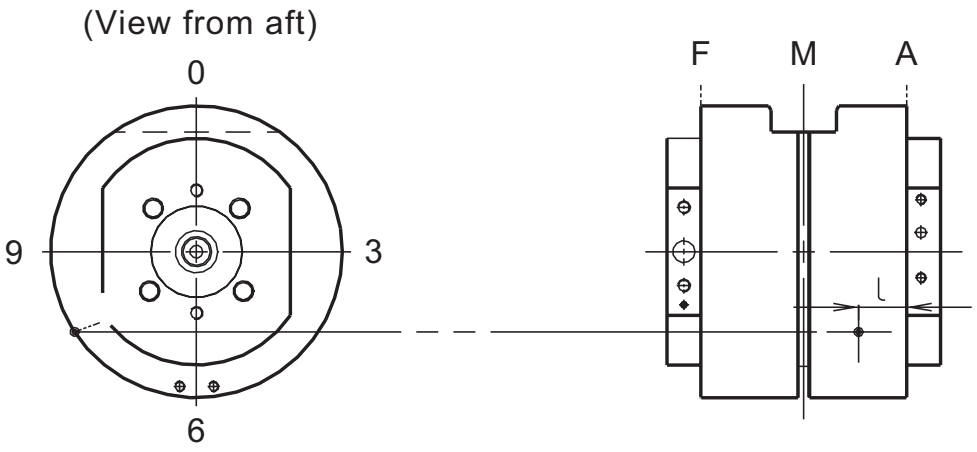

Main and crank bearing journals

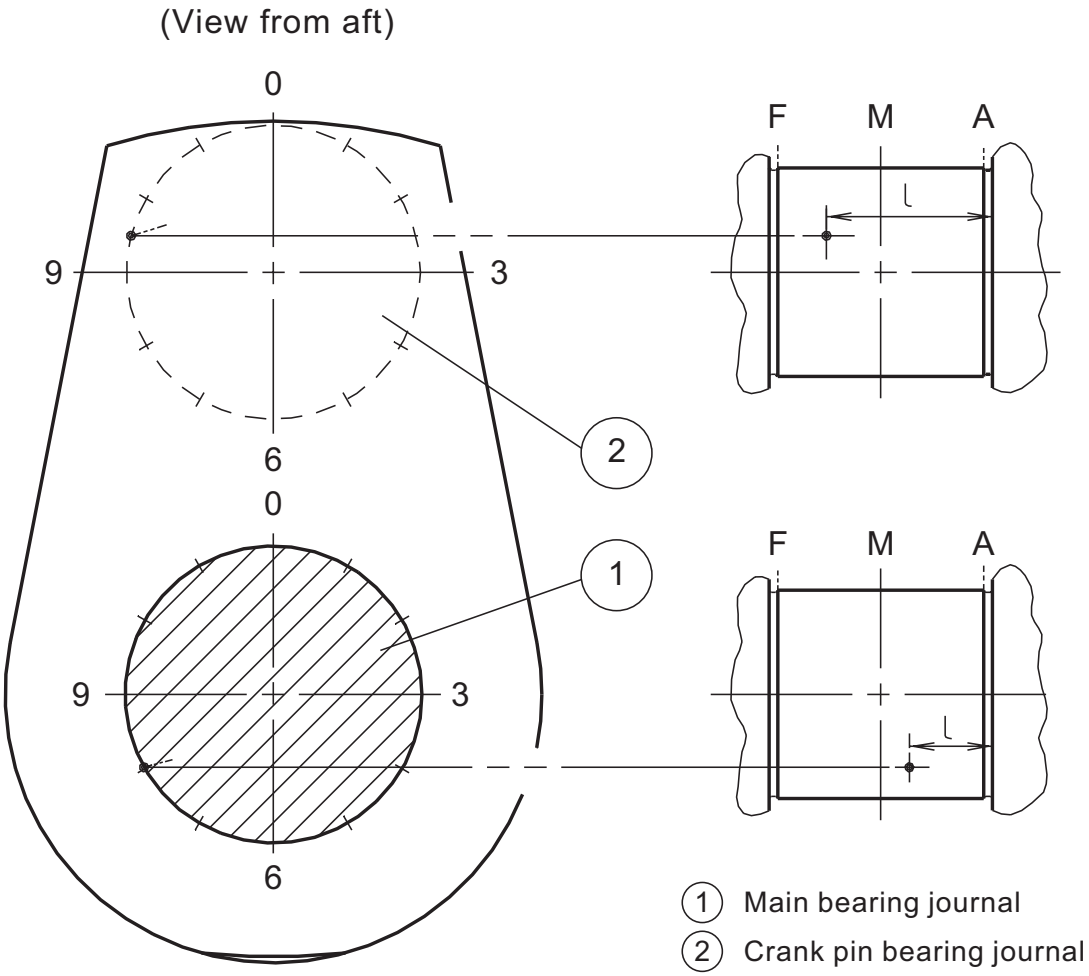

Table 3

Inspection without Opening-up (7.1)			
Checks		**Symbol**	**Observations**
Oil Flow	OF	•	OK, similarity
		U	Uneven
Oil Jets	OJ	•	OK, similarity
(Crosshead, Guide Strips)		R	Reduced
		M	Missing
		TW	Twisted
White Metal	WM	•	OK
		SQ	Squeezed out
		CR	Cracks
		L	Loose
		M	Missing
Crosshead Guides	CG	•	OK
		SC	Scratches
		CO	Corrosion
		SW	Silvery White
Oil Pan	OP	•	OK, clean
		WM	White metal fragments
Oil Condition	OC	•	OK
		DK	Dark
		WT	Water traces

Table 4

Open-up Inspection and overhaul (7.2)				
Checks		**Symbol**	**Observations**	**Ref.**
White Metal	WM	•	OK	
		W	Wiping	7.3II
		HC	Hard Contact	7.4
		OS	Oil Starvation	7.7
		CR	Cracks	7.5
		CRC	Cracks Cluster	7.1
		L	Loose	7.1
		M	Missing	6.2
		SE	Spark Erosion	7.4B, 6.1
		CO	Corrosion	
Overlayer	OL	•	OK	
(Crosshead only)		TE	Tearing	7.3
		W	Wiping	7.3 II
Transitions :		•	OK	
Oil Wedge	OW	RR	Ragged Ridges	7.7
Bore Relief	BR	W	Wiping	7.7
Tang. Run-out	TR	D	Disappeared	7.10B II
Journal/Pin	J/P	•	OK	
		SE	Spark Erosion	6.2
		CO	Corrosion	7.4B, 6.1
		SW	Silvery White	6.1
		SC	Scratches	7.4, 7.11
Back of Shell	BS	•	OK	
		FR	Fretting	7.4
		TH	Trapped Hard Particles	7.4

M/V	Engine Type: CW / CCW 1)		Running hours Total: 4)	Checked by: 4)
Yard:	Builder:	Engine No.:		
No.:	Built year:			Data: 4)

Journal/pin Roughness 3)		N6(M)	N3(E)	N6(E)		
Hydr. open. pressure		880	900	870		
Clearance (mm) Top	Aft	0.5	0.4	0.4	0.45	
	Fore	0.5	0.4	0.4	0.45	
Description of condition		MB/4/MBD/WM/CR;L;M;HC/7h15'; ℓ_{I};r//	CHB/5/MBD/WM;OW/W;RR/5h45'; ℓ_{II};(a,b)//	CRB/3/MBD/WM//M;W/1h15';ℓ_{III};(a,b, ±c)//	CHB/6/OF;u;OJ;R;TW/WM;SQ//	
Type of inspection 2)		7.2	7.2	7.2	7.1	
Engine running hours		10000	15000	8000	8000	
Checked by		N.N.	N.N.	N.N	N.N.	
Date		8/3.93	8/3.93	8/3.93	8/3.93	

1) Engine direction of rotation, seen from aft, must be underlined; CW: Clockwise, CCW: Counter clockwise
2) Inspection without opening-up: 7.1; Open-up inspection: 7.2.
3) It should be stated whether the roughness is measured: M, or evaluated: E.
4) Only to be filled in, if all observations are carried out at the same running hours.

Plate 70814 Inspection of Records, Blank

M/V	Engine Type: CW / CCW 1)		Running hours Total: 4)	Checked by: 4)
Yard:	Builder:	Engine No.:		
No.:	Built year:			Data: 4)

Journal/pin Roughness 3)			
Hydr. open. pressure			
Clearance (mm)	Top	Aft	
		Fore	
Description of condition			
Type of inspection 2)			
Engine running hours			
Checked by			
Date			

1) Engine direction of rotation, seen from aft, must be underlined; CW: Clockwise, CCW: Counter clockwise
2) Inspection without opening-up: 7.1; Open-up inspection: 7.2.
3) It should be stated whether the roughness is measured: M, or evaluated: E.
4) Only to be filled in, if all observations are carried out at the same running hours.

Plate 70815 Main Bearing Alignment

M/V	Engine Type:		Total running hours	Checked by:
	Builder:	Engine No.:		
Yard No.:	Built year:			Date:
For comparison of measurements	Ships draught, aft measured (m)		Fully loaded (m)	Ballasted (m)
	jacket cooling water temp. (°C)		main lub. oil temp.	(°C)

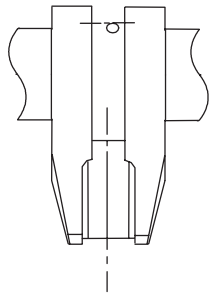

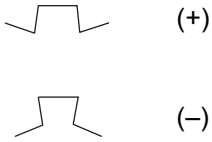

Fig. 1

For deflection readings, a dial micrometer is to be placed in the punch marks.
Closing of the crankthrow is regarded as negative deflection.

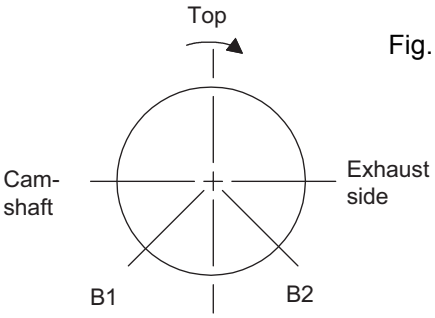

Fig. 2

(Unit for measuring and calculating : 1/100 mm)

Fig. 3

Crankpin position		Cyl. No. & deflections							
		1	2	3	4	5	6	7	8
Near bottom, camshaft side	B1								
Camshaft side *)	C								
Top	T								
Exhaust side *)	E								
Near bottom, exhaust side	B2								

*) Positions C and E are included for reference purposes.

Fig. 4

Bottom 1/2 (B1 + B2)	= B								

Fig. 5

Vertical Deflections									
Top – Bottom or (T – B)	= V								
For permissible deflections, see Plate 70817. See also “Alignment of Main Bearings”, Item 2.2, earlier in this Chapter.									

Plate 70817 Crankshaft Deflection, Limits

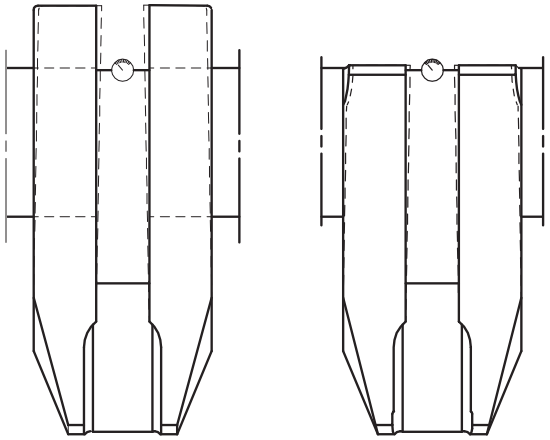

	Normally obtained for a new or recently overhauled engine mm		Realignment recommended mm		Absolute maximum permissible mm	
	1	2	1	2	1	2
K98MC	0.24	0.49	0.65	0.74	0.98	0.98
K98MC-C	0.20	0.41	0.54	0.61	0.81	0.81
S90MC-C	0.36	0.71	0.96	1.08	1.45	1.45
K90MC	0.25	0.50	0.67	0.75	1.00	1.00
K90MC-C	0.20	0.41	0.54	0.61	0.82	0.82
S80MC-C	0.38	0.76	1.00	1.13	1.50	1.50
S80MC	0.36	0.73	0.97	1.10	1.46	1.46
L80MC	0.27	0.54	0.72	0.81	1.08	1.08
K80MC-C	0.22	0.44	0.58	0.66	0.88	0.88
S70MC-C	0.33	0.66	0.88	0.99	1.32	1.32
S70MC	0.32	0.64	0.85	0.96	1.28	1.28
L70MC-C	0.26	0.53	0.65	0.74	0.98	0.98
L70MC	0.24	0.48	0.63	0.71	0.95	0.95
S60MC-C	0.28	0.56	0.75	0.84	1.13	1.13
S60MC	0.27	0.55	0.73	0.82	1.10	1.10
L60MC-C	0.22	0.45	0.59	0.67	0.89	0.89
L60MC	0.20	0.40	0.54	0.61	0.81	0.81
S50MC-C	0.23	0.47	0.62	0.70	0.94	0.94
S50MC	0.23	0.46	0.61	0.69	0.92	0.92
L50MC	0.17	0.34	0.45	0.51	0.68	0.68
S46MC-C	0.23	0.46	0.62	0.69	0.93	0.93
S42MC	0.21	0.43	0.57	0.64	0.86	0.86
L42MC	0.14	0.28	0.38	0.43	0.57	0.57
S35MC	0.17	0.35	0.46	0.52	0.70	0.70
L35MC	0.10	0.20	0.27	0.30	0.40	0.40
S26MC	0.12	0.23	0.31	0.35	0.46	0.46

1. Permissible except for foremost crank throw.
2. Permissible for the foremost crank throw.
   When the camshaft chain drive is located in the foremost part of the engine (S/L35MC), the crankshaft deflection readings for cyl. 1 are to be measured with untightened chain.

When judging the alignment on the above "limiting-value" basis, make sure that the crankshaft is actually supported in the adjacent bearings. (See “Alignment of Main Bearings”, Item 2.3.)

Plate 70818A Circulating Oil System
(Engines with Uni-Lub. System)

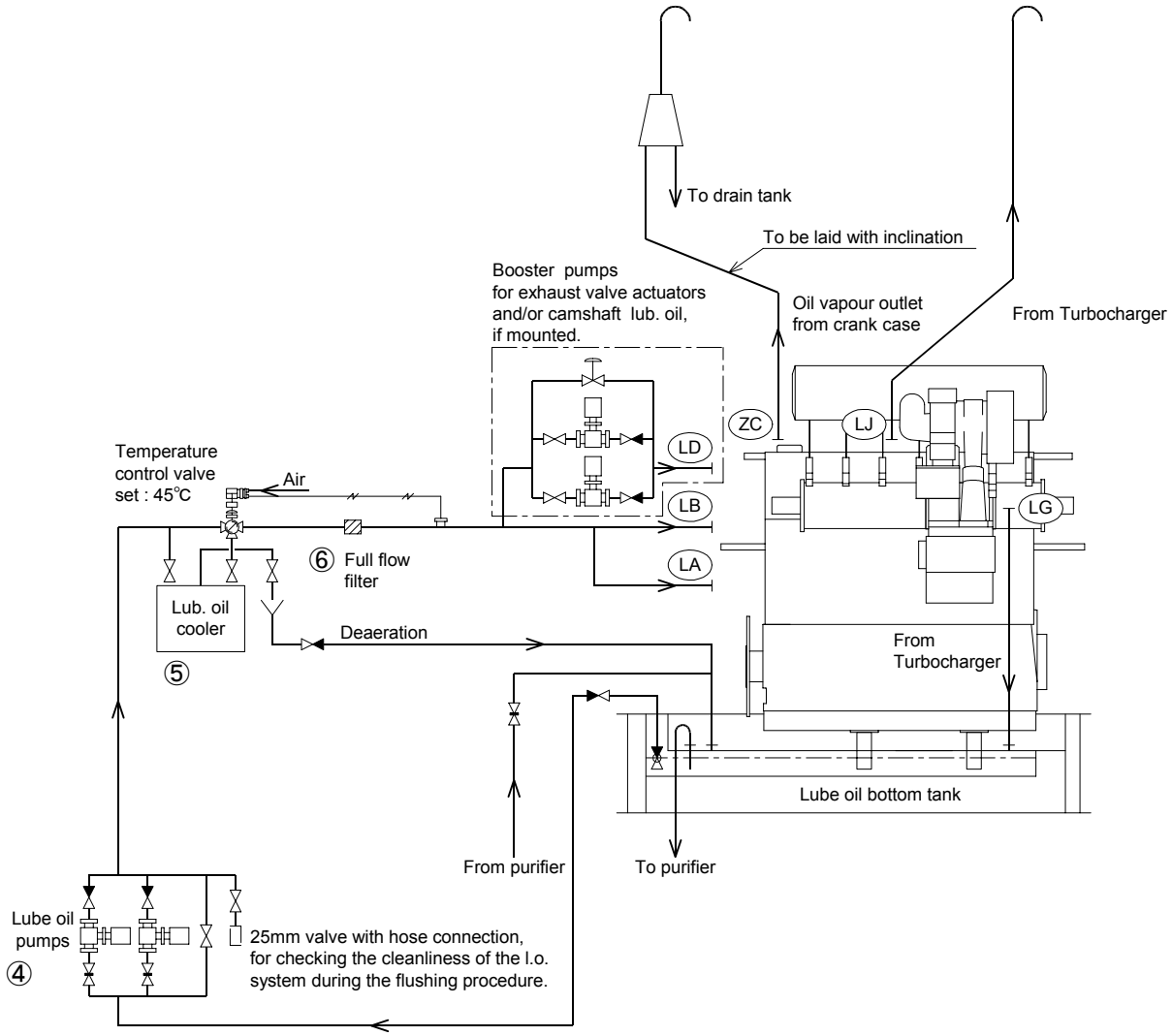

Plate 70818B Circulating Oil System
(Engines without Uni-Lub. System)

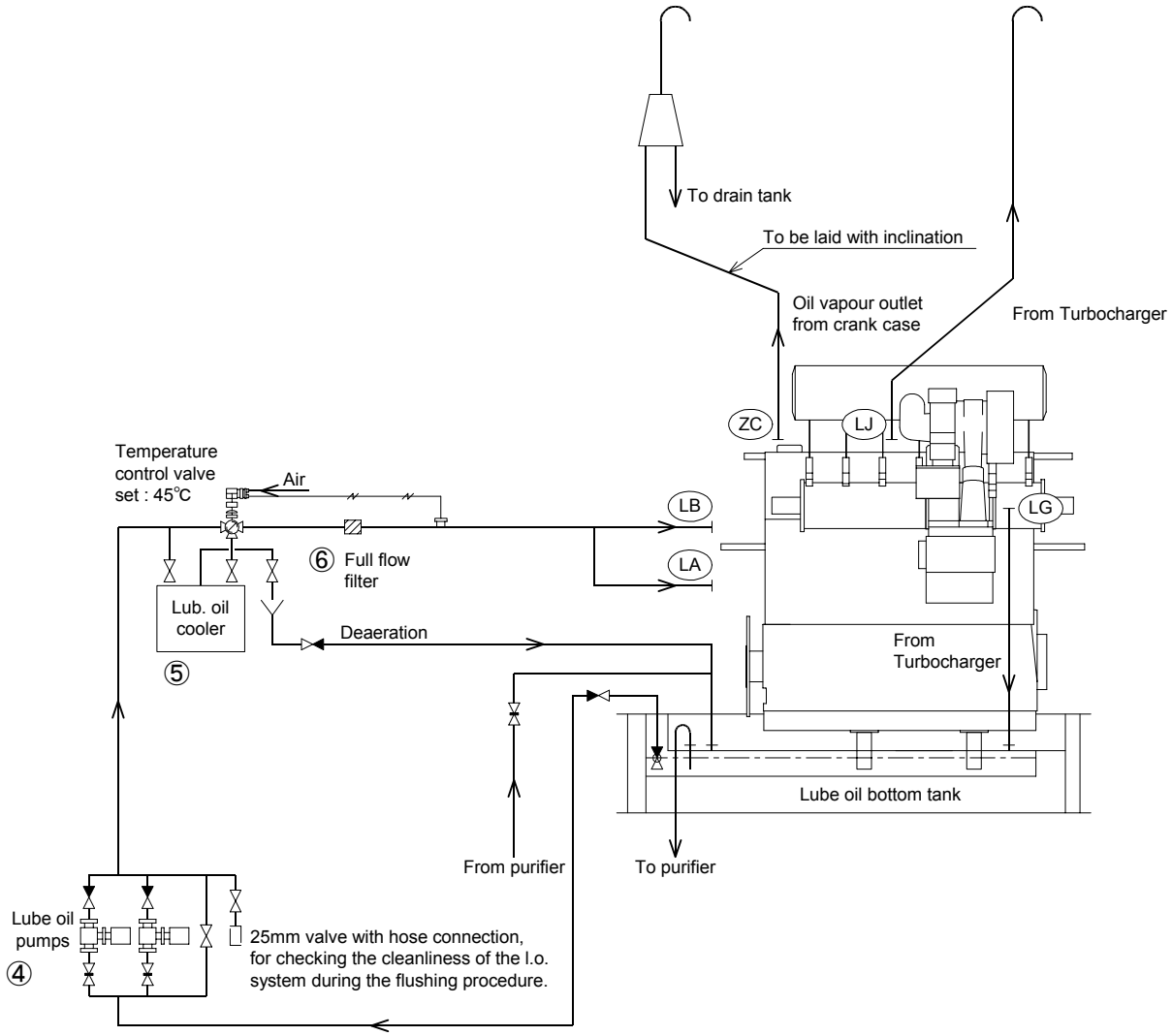

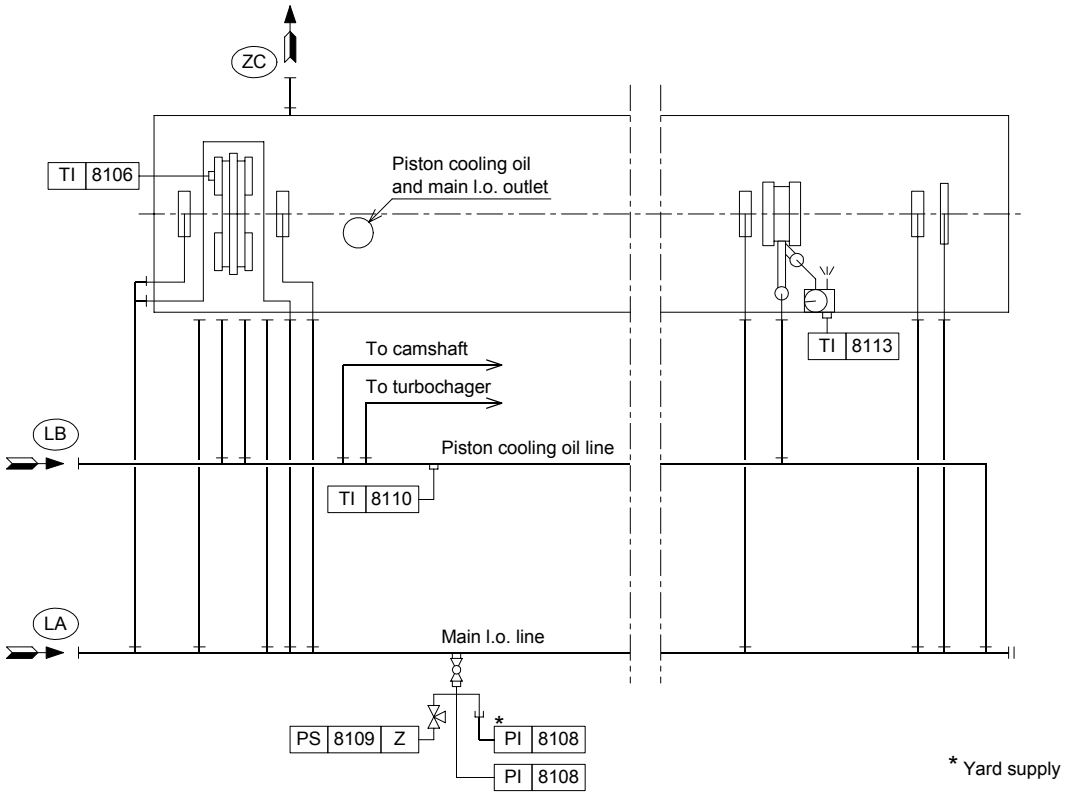

11~14K98MC, 11~14K98MC-C

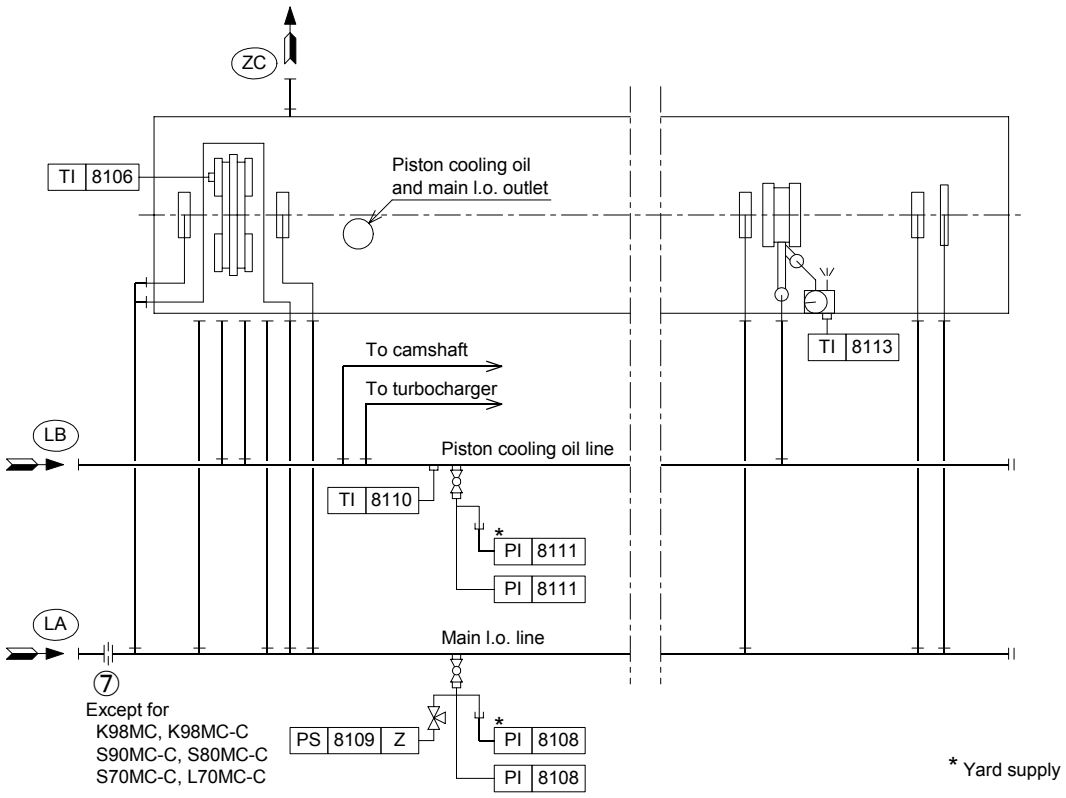

Except for
11~14K98MC, 11~14K98MC-C
S35MC, L35MC, S26MC

For engine with Uni-lub system without booster pumps (see *Plate 70818A*).

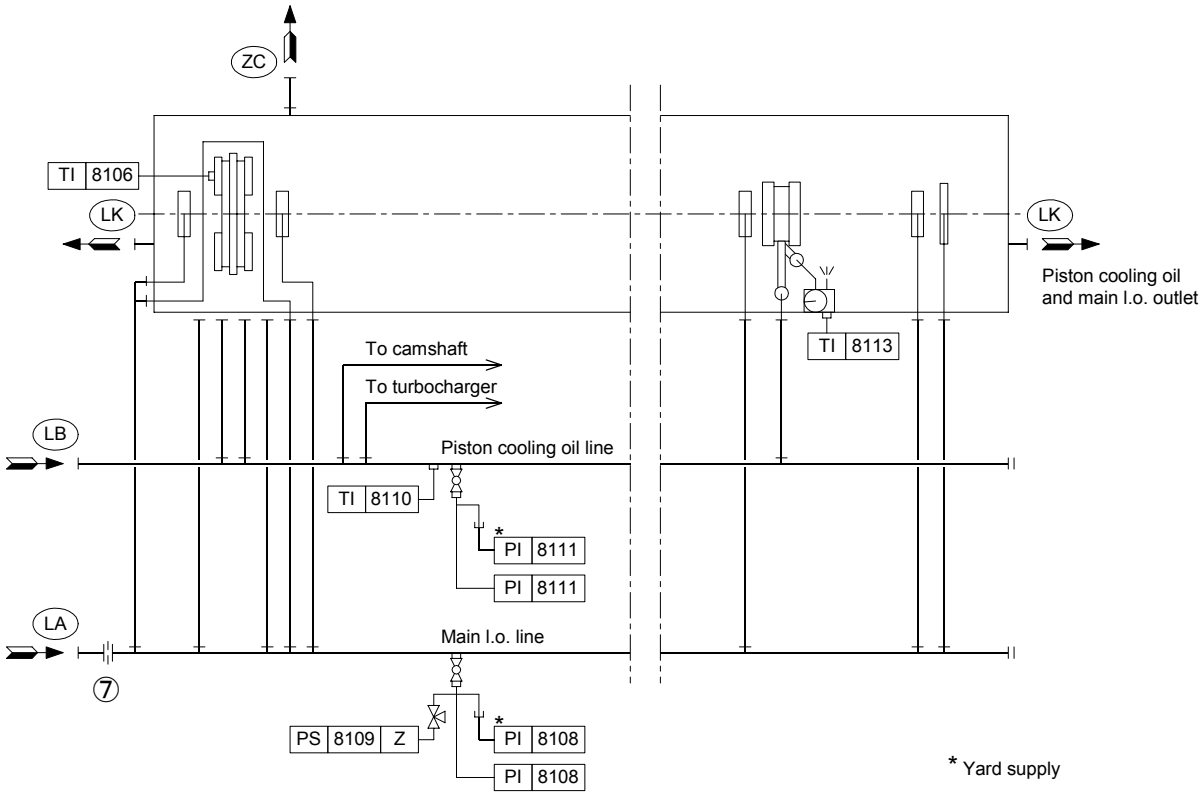

S35MC, L35MC

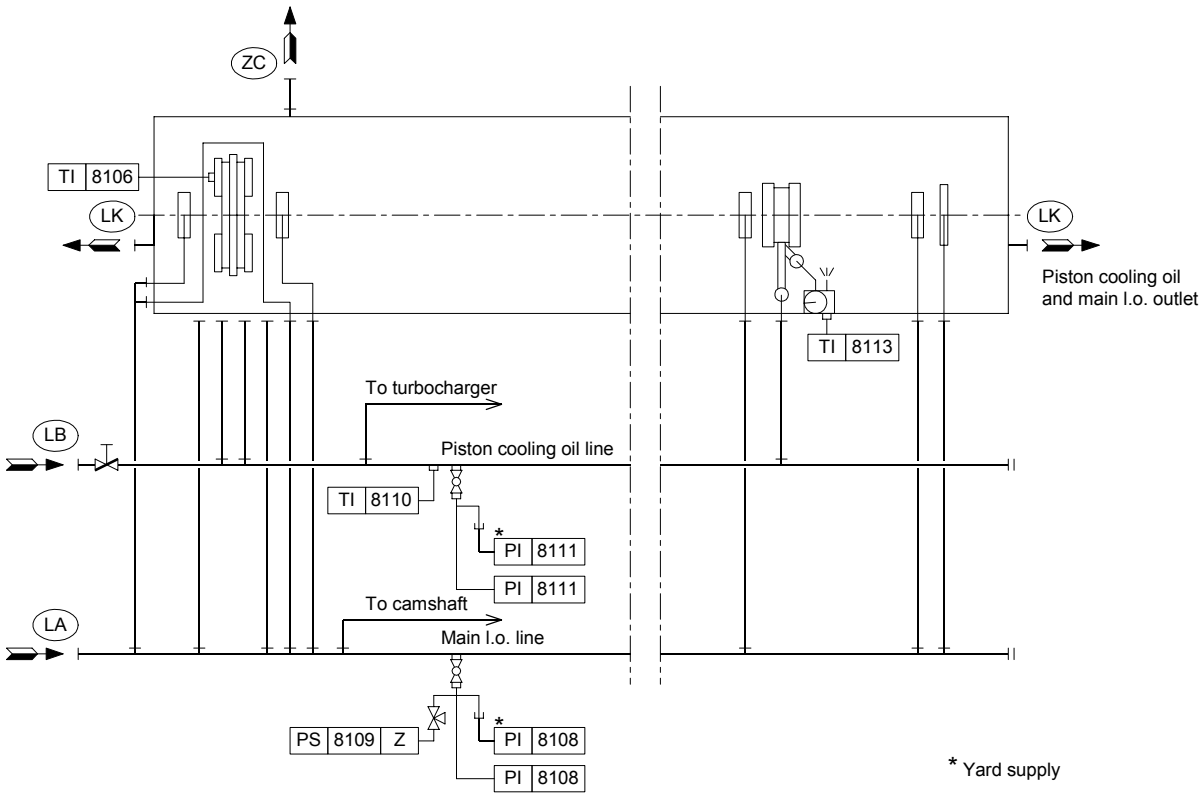

S26MC

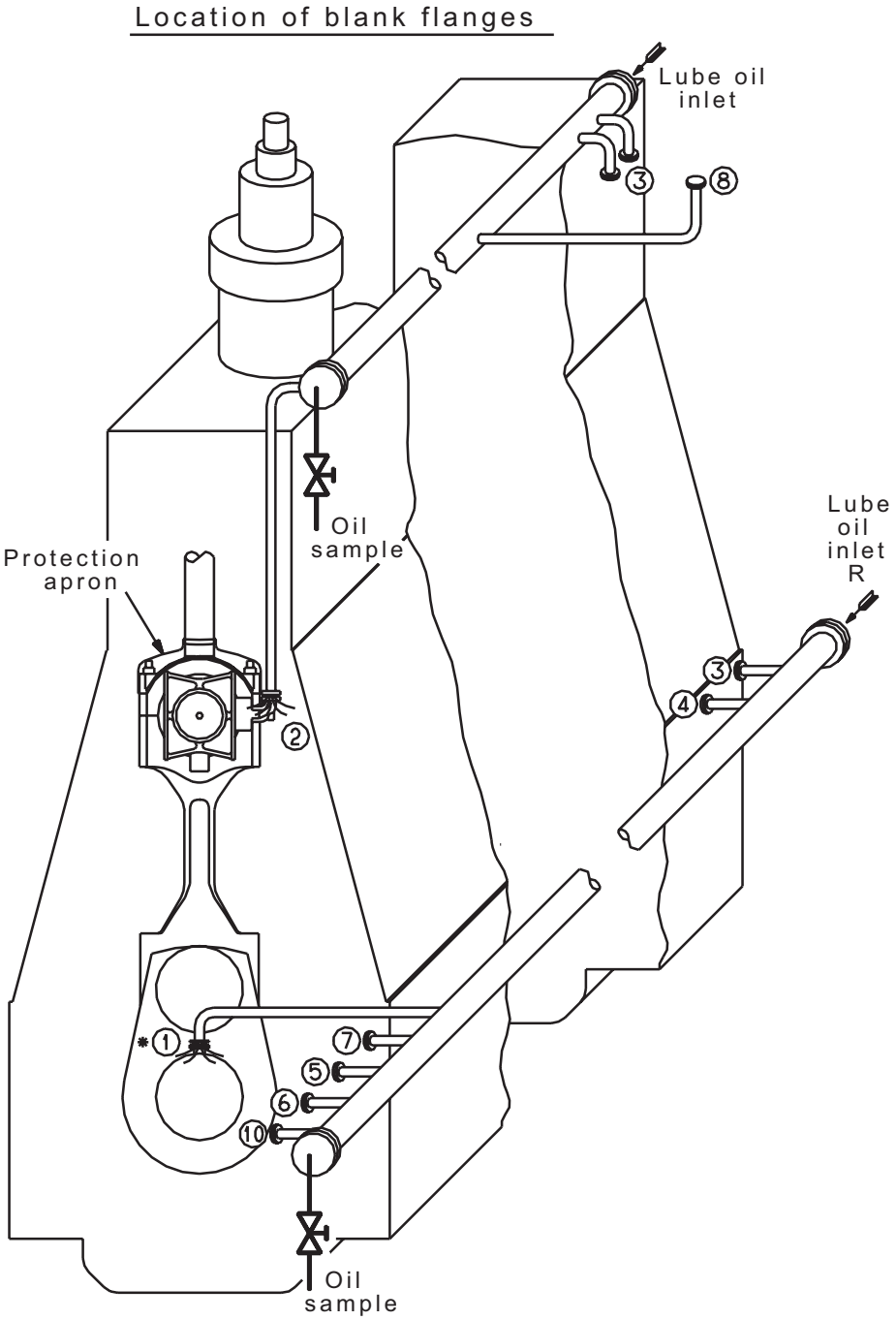

Blanking of pipes:

1. main bearing by-pass blanks
2 Crosshead bearings by-pass blanks
3. Blank-off bearings and spray nozzles at main chain
4. Blank-off thrust bearing
5. Blank-off or by-pass axial vibration damper
6. Blank-off torsional vibration damper
7. Blank-off forward moment compensator chain drive
8. Blank-off or by-pass turbocharger
10. Blank-off PTO-PTI power gear

Plate 70822 Flushing Log

M/V	Engine Type:		System		Checked by:
Yard:	Builder:	Engine No.:	M.E. Lub. Oil		
No.:	Built year:		Camshaft		Data:

Info	Pumps Centrifugal ☐ Screw ☐ Maker : Type : Capacity :	Filter Absolute/fineness Maker : Main : µm Type : By-pass : µm Type	Centrifuge Maker : Type : Capacity :	Magnet Filter Maker : Type : Other Filters Maker : Type :
	Filter Unit (if used) µm Type : Maker :			
	Inspection of Checked by Date Pipes : Tanks :			

Date:	Remarks	Temp. [°C]	Press. [bar] at pump & M.E.	L.O. System: Pump 1-2 Time start & stop	Pump 1-2 Running hours per day	Pump 1-2 Running hours total	Purifier Start/ stop running hours	Filter Unit Start/ stop running hours	Check No. & ISO Code

Sign.	Inspector	Yard/Engine builder	Total flushing hrs.	Final cleanliness:

Recording of pump running hours within 1/2 h.
Cleaning and replacement filters to be recorded under remarks.

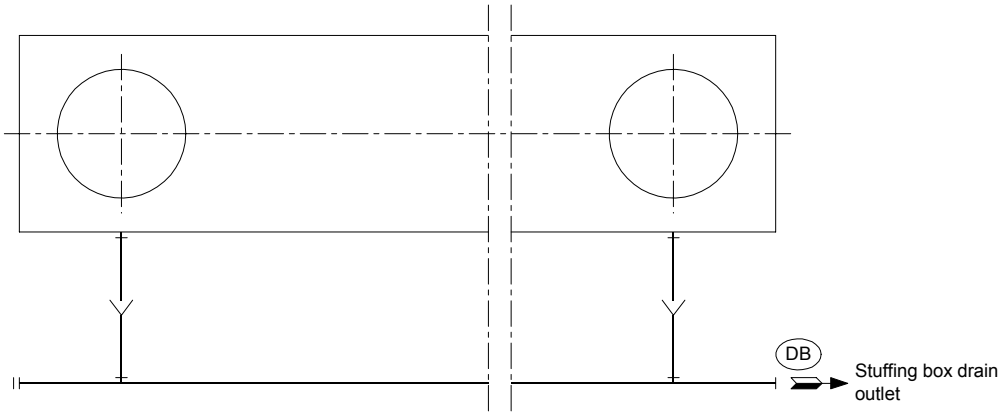
DB
Stuffing box drain outlet

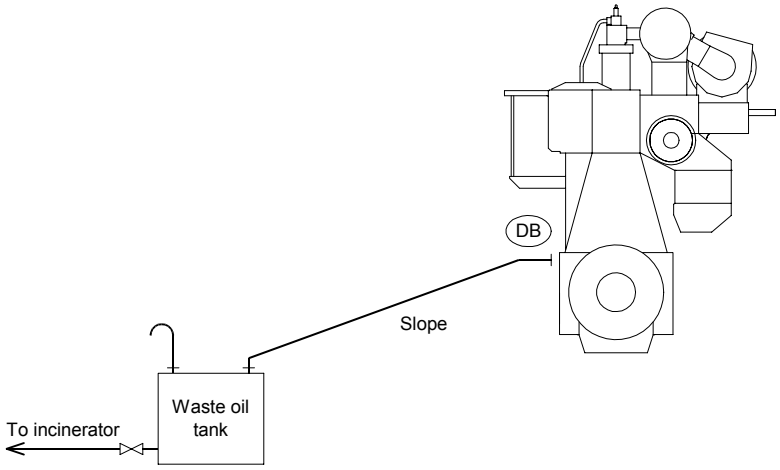
DB
Slope
Waste oil tank
To incinerator

(Option)

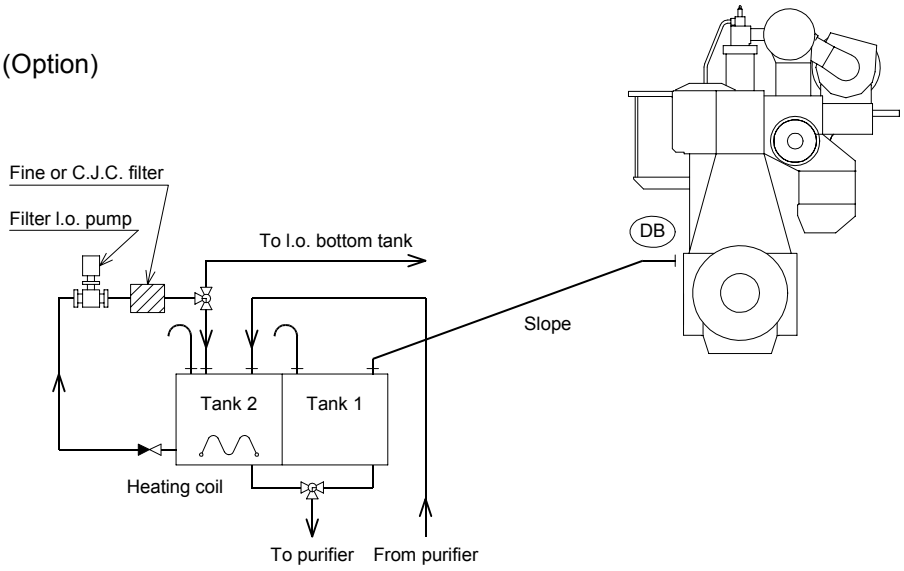
Fine or C.J.C. filter
Filter l.o. pump
To l.o. bottom tank
DB
Slope
Tank 2
Tank 1
Heating coil
To purifier
From purifier

Plate 70824A Camshaft Lubricating Oil System
(Engines with Uni-Lub. System)

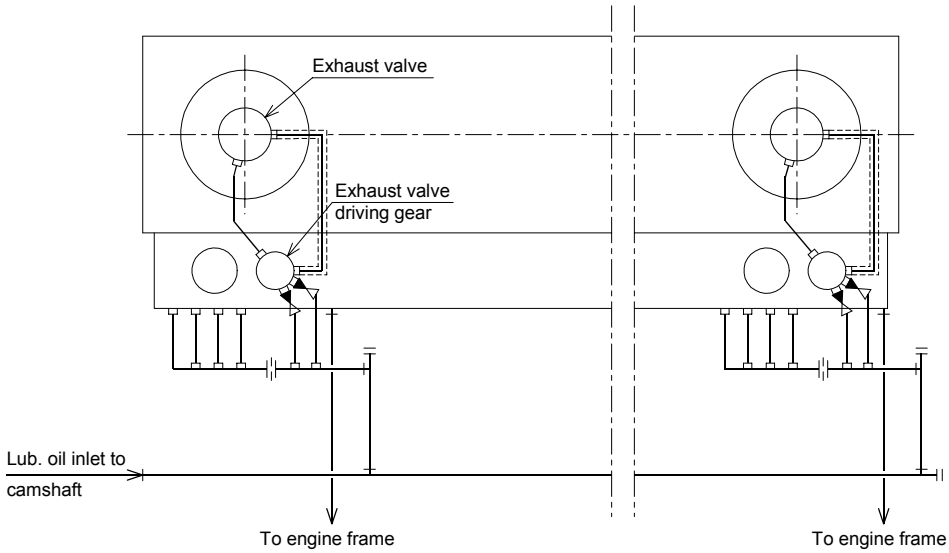

K98MC, K98MC-C
S90MC-C, K90MC, K90MC-C
K80MC-C

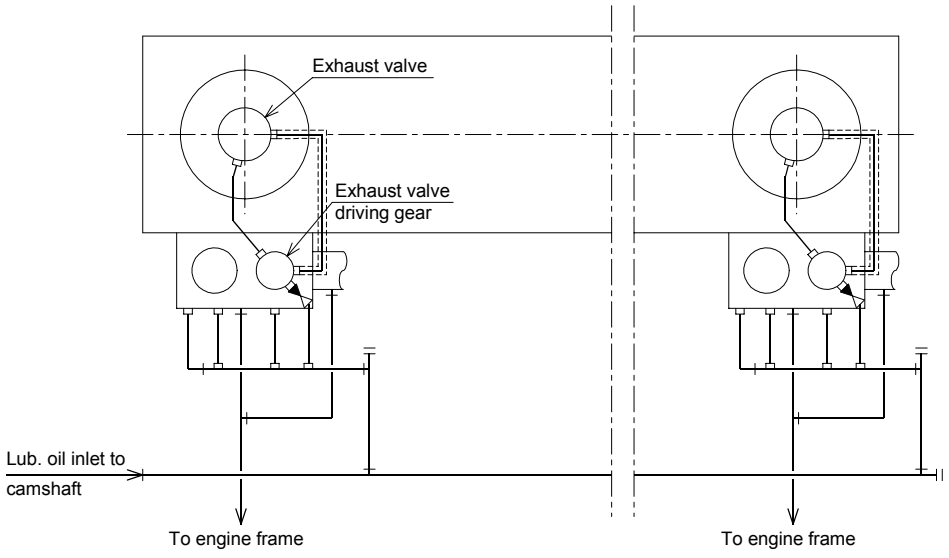

S80MC-C, S80MC, L80MC
S70MC, L70MC
S60MC, L60MC
S50MC, L50MC

Plate 70824B Camshaft Lubricating Oil System
(Engines with Uni-Lub. System)

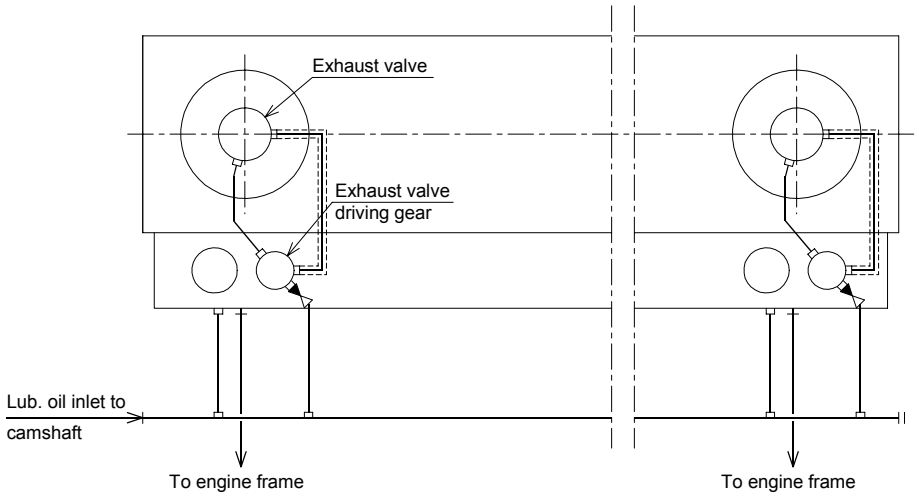

S70MC-C, L70MC-C
S60MC-C, L60MC-C
S50MC-C
S46MC-C
S42MC, L42MC
S35MC, L35MC
S26MC

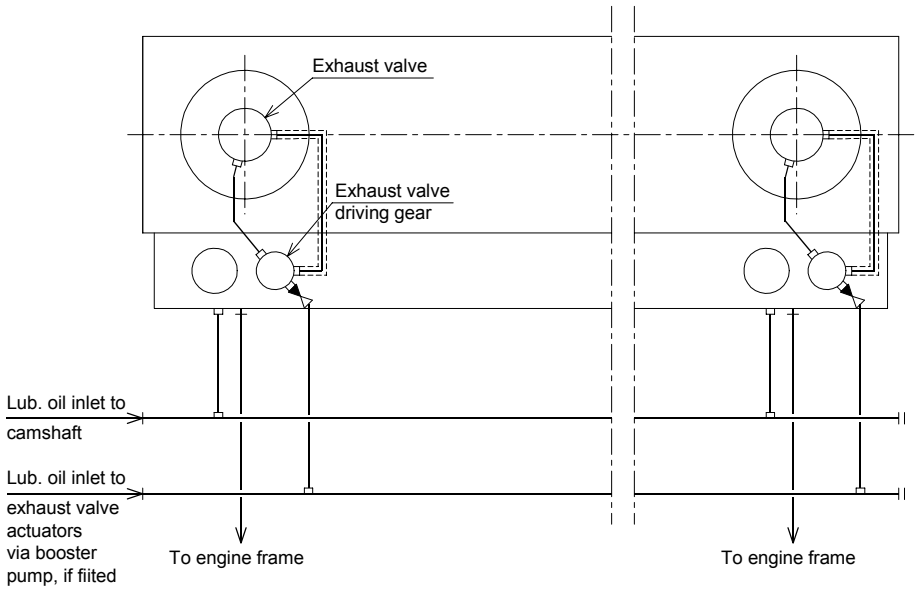

Following engine with booster pump, if fitted, see *Plate 70818A*.
S70MC-C, L70MC-C
S60MC-C, L60MC-C
S50MC-C

Plate 70824C Camshaft Lubricating Oil System
(Engines without Uni-Lub. System)

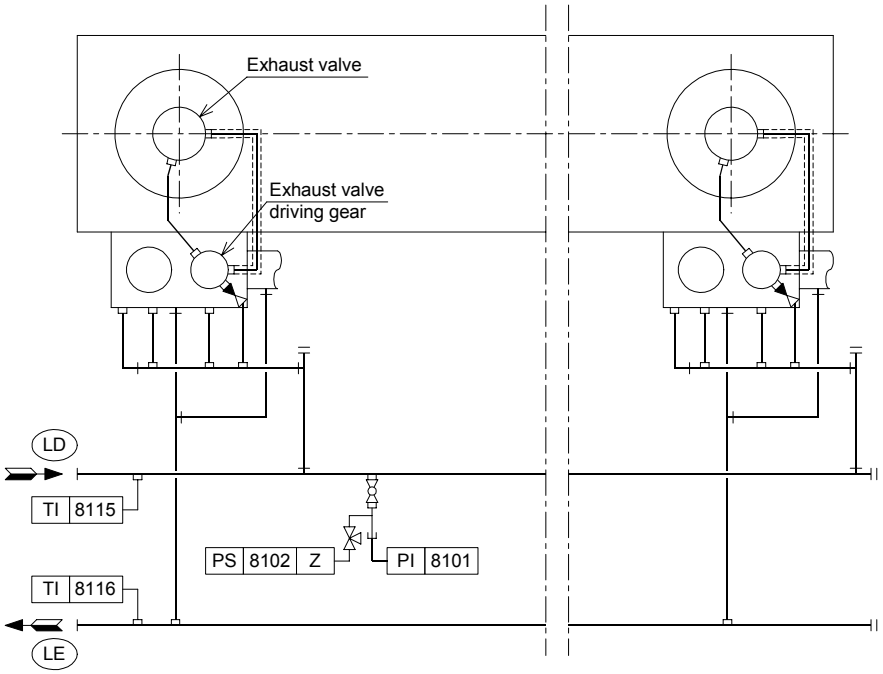

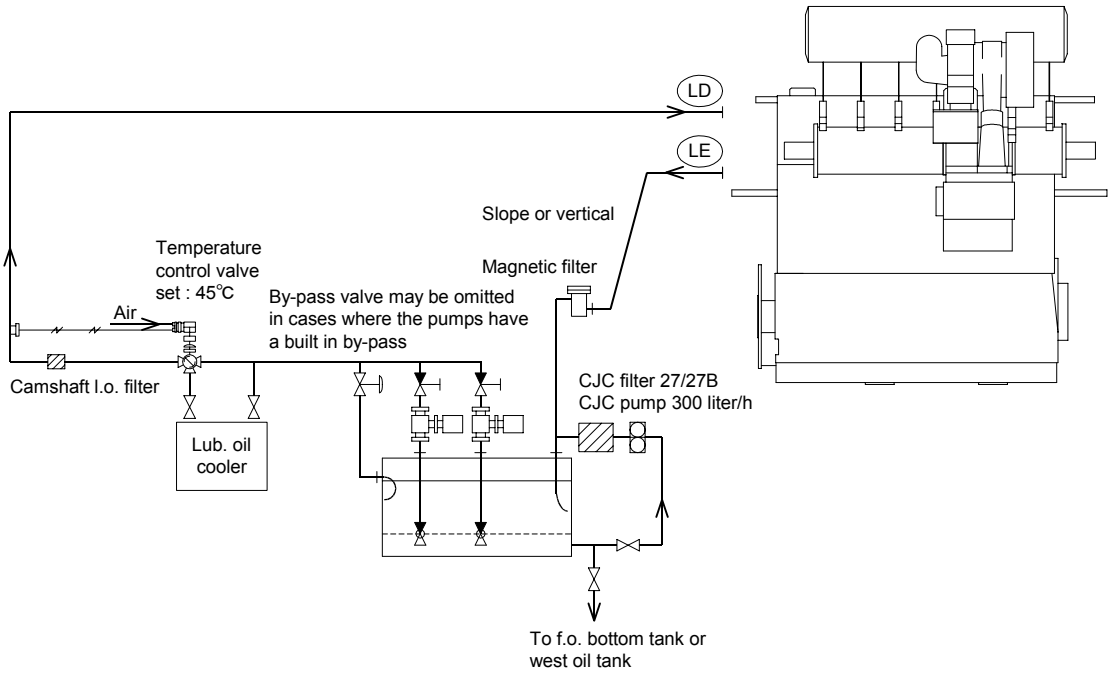

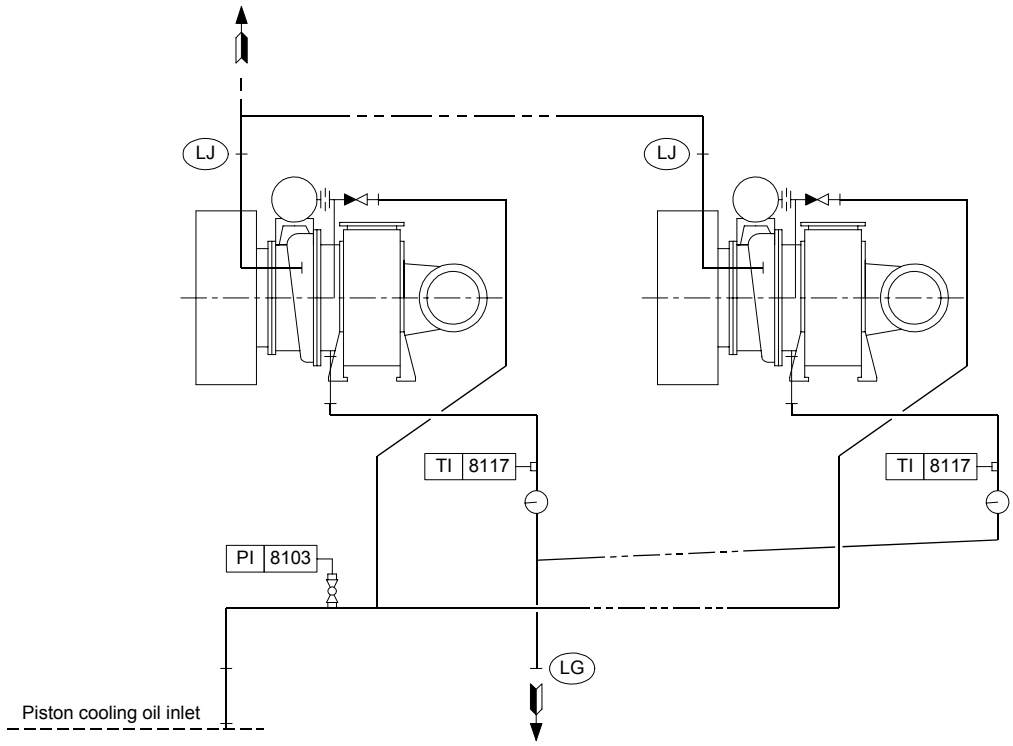

TCA type turbocharger

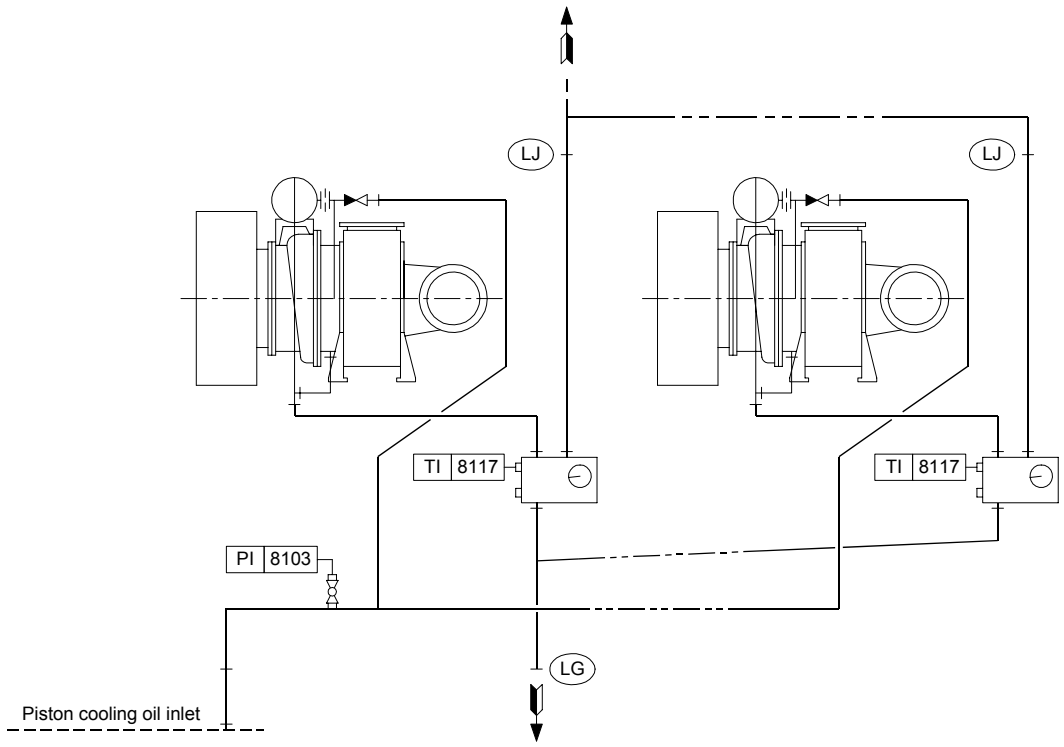

NA type turbocharger

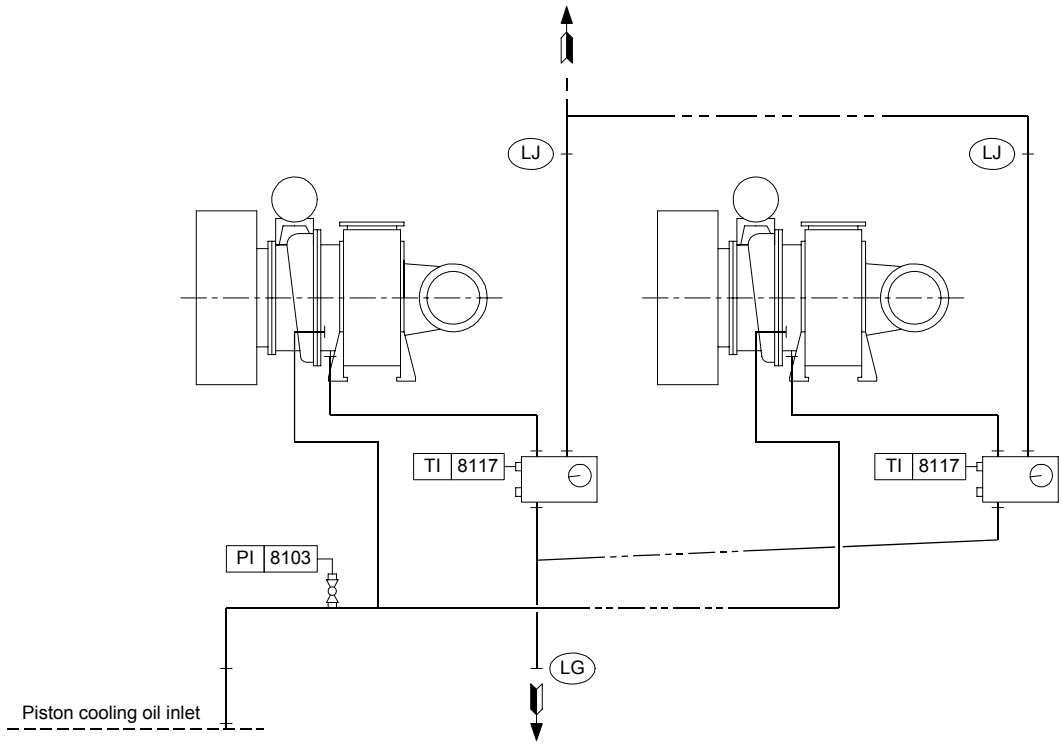

TPL type turbocharger

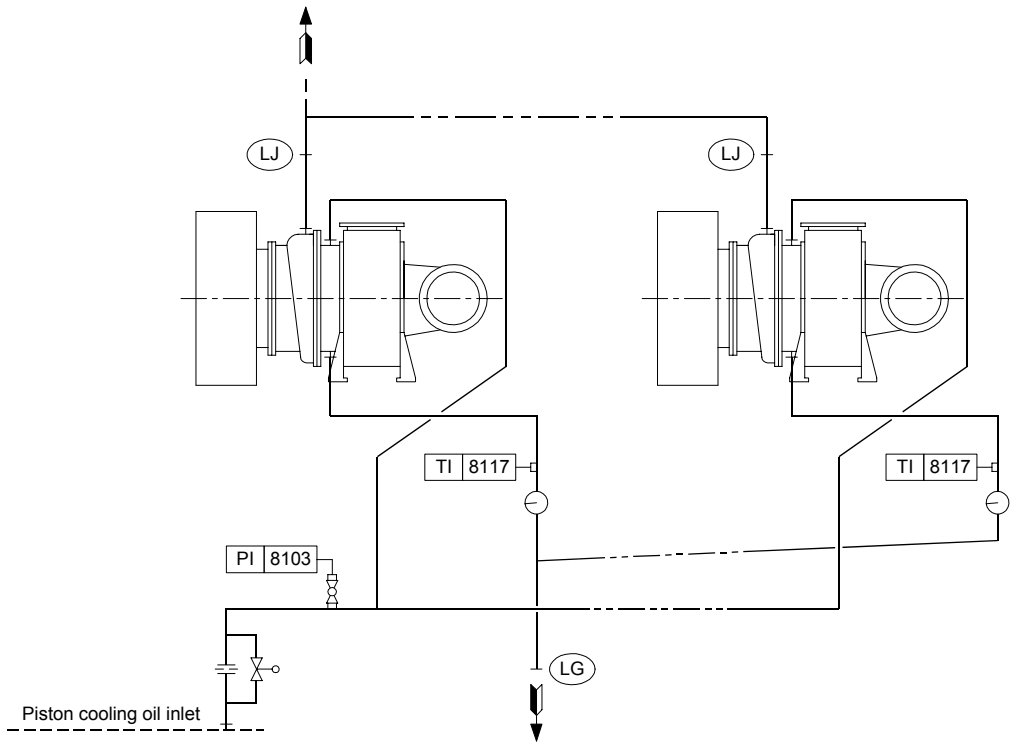

MET type turbocharger

See also “Bearings”, Item 14, earlier in this chapter.

Fig. 1 Measuring of crown thickness.

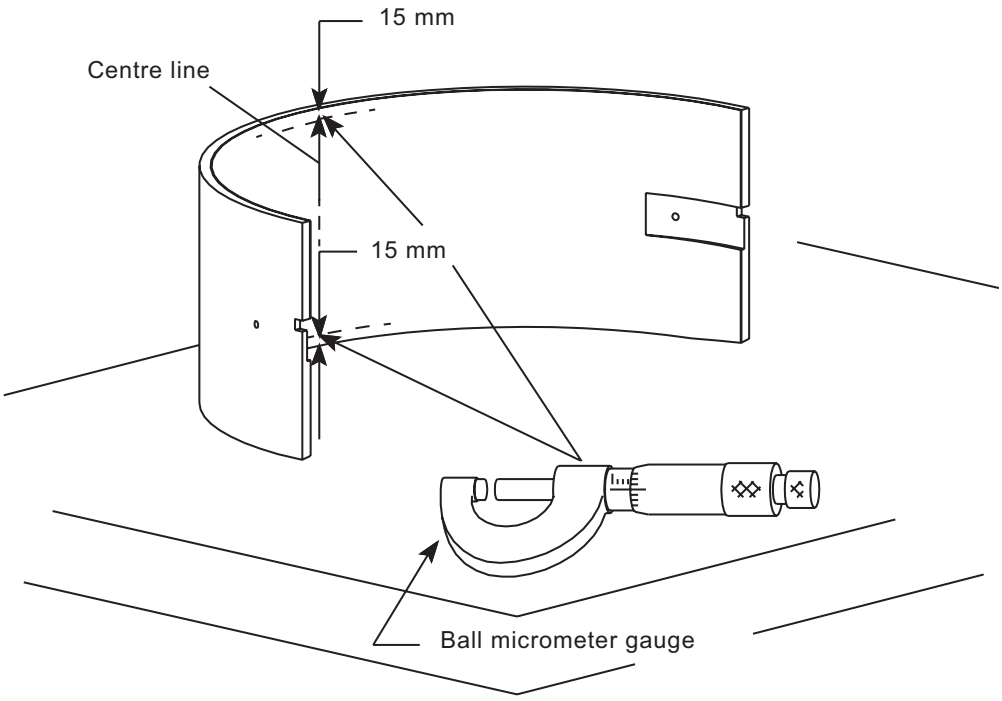

701 SAFETY PRECAUTIONS AND ENGINE DATA

702 CHECKS DURING STANDSTILL PERIODS

703 STARTING, MANOEUVRING AND RUNNING

704 SPECIAL RUNNING CONDITINS

705 FUEL AND FUEL TREATMENT

706 PERFORMANCE EVALUATION & GENERAL OPERATION

707 CYLINDER CONDITION

708 BEARING AND CIRCULATING OIL

709 WATER COOLING SYSTEM

710 DATA

Chapter 709
Water Cooling Systems

Contents Page

Water Cooling Systems

1. General 709-03
2. Sea water Cooling System 709-03
3. Jacket Water Cooling System 709-03
4. Central Cooling System 709-04
5. Preheating during Standstill 709-04
6. Freshwater Cooling Failure 709-04

Cooling Water Treatment

1. Reducing Service Difficulties 709-06
   - 1.1 Type of Damage 709-06
   - 1.2 Corrosion Inhibitors 709-06
   - 1.3 Cooling Water Quality 709-07
   - 1.4 Venting 709-07
2. Checking the System and Water 709-07
   - 2.1 Regularly 709-07
   - 2.2 Once a Week 709-08
   - 2.3 Every Third Month 709-08
   - 2.4 Once a Year 709-09
   - 2.5 Every Four-Five Years and after Long Time Out of Operation 709-09
   - 2.6 Water Losses and Overhauling 709-09
3. Cleaning and Inhibiting 709-09
   - 3.1 General 709-09
   - 3.2 Cleaning Agents 709-09
   - 3.3 Inhibitors 709-10
4. Cleaning and Inhibiting Procedure 709-10
   - 4.1 General 709-10
   - 4.2 Degreasing 709-10
   - 4.3 Descaling 709-11
   - 4.4 Filling up with Water 709-13
   - 4.5 Adding the Inhibitor 709-13
5. Central Cooling System, Cleaning and Inhibiting 709-13
6. Nitrite-borate Corrosion Inhibitors for Fresh Water Treatment 709-14

Contents Page

Plates

Seawater Cooling System	70901
Jacket Cooling Water System	70902A
Jacket Cooling Water System	70902B
Jacket Cooling Water System	70902C
Central Cooling System	70903
Preheating of Jacket Cooling Water	70904

Water Cooling Systems

1. General

Pipe systems vary considerably from plant to plant.
The following schematic pipe diagrams are included here, for guidance, to illustrate the essential principles of the circuits and their correlation.
For a specific plant, the correct details must be found in the piping diagrams supplied by the shipyard.

Furthermore, this chapter describes the engine with Uni-Lub system.
In case of the engines without Uni-Lub system, the camshaft lub. oil cooler is applied.

2. Sea water Cooling System (*Plate 70901*)

Sea water is drawn up through the sea connection ① by the sea water pump ②.
From the pump, the water-flow is divided:
in parallel through the scavenging air cooler(s), and through the lub. oil cooler and jacket water cooler, the two last mentioned connected in series.
The sea water is later mixed again, and then continues to the thermostatically controlled 3-way regulating valve ⑥.

Regulating valve ⑥ is controlled by the sensor ⑧ which is located in the sea water inlet pipe.
The thermostat is adjusted so that the water temperature at the engine inlet is kept 25 ~ 28 °C.
If the sea water inlet temperature drops below the set level, then regulating valve ⑥ opens for the return flow to the seawater pump suction piping.

3. Jacket Water Cooling System (*Plate 70902A*, *70902B* and *70902C*)

The jacket water is circulated through the cooler and the main engine cylinders by jacket water pump.
The thermostatically controlled regulating valve ②, at the outlet from the cooler, mixes cooled and uncooled jacket water in such proportions that the temperature of the outlet water from the main engine is maintained at about 80 ~ 85 °C.
Regulating valve ② is controlled by the sensor ③, which is located in the cooling water outlet of the main engine.

⚠ In order to avoid increased cylinder wear, it is important to maintain the cooling water outlet temperature at 80 ~ 85 °C.
A lower temperature may cause condensation of sulphuric acid on the cylinder walls.

The expansion tank ⑤ takes up the difference in the water volume at changes of temperature.

For the 70 ~ 98MC(-C) engines:

To prevent air accumulation in the cooling water system, a deaerating tank ④ has been inserted in the outlet piping.

Also an alarm device is installed to give off alarm, in case of excessive air/steam formation in the system.

4. Central Cooling System (*Plate 70903*)

In the central cooling water system, the central cooling water pump ③ circulates the low-temperature freshwater (central cooling water) in a cooling circuit: in parallel through the scavenging air cooler(s), and through the lub. oil cooler and jacket water cooler, the two last mentioned connected in series.

The temperature in the low-temperature part of the system is monitored by the thermostatically controlled regarding valve ④.
Adjust the regulating valve so that the central cooling water temperature at inlet to the air cooler(s), is above the set level.

5. Preheating during Standstill

Preheat the engine in accordance with Chapter 703, "Starting-up, Manoeuvring and Arrival in Port", Item 7.

Preheat by means of:
- A built-in preheater, see also *Plate 70904*.
- Cooling water from the auxiliary engines.

6. Freshwater Cooling Failure

It is assumed that the temperature rise is not caused by defective measuring equipment or thermostatic valve.
These components should be checked regularly to ensure correct functioning.

⚠ If the cooling water temperature, for a single cylinder or for the entire engine, rises to nearly 100 °C, follow this procedure:

Open the test cocks on the cylinder outlets.

⚠ **WARNING**
When opening the test cock, keep clear of the line of ejection, as hot steam may be blown out.

Is water coming out from the test cock?

YES: 1) Close the test cocks.
2) Re-establish the cooling water supply at once, or stop the engine for trouble-shooting.

NO: The cooling space is not completely filled with water.
This result in local overheating, and hence the formation of steam.

1) Close the test cocks.
2) Stop the engine.
3) Close the outlet valve on the overheated cylinder, or on the engine outlet.
4) Open the indicator cocks.
5) Keep the auxiliary blowers and lub. oil pumps running.
6) Turn the piston of the cylinder concerned to BDC to slowly cool down the overheated area via the air flow through the cylinder and indicator valve.

⚠ 7) Leave the engine to cool.
This prevents extra shock heat stresses in cylinder liner, cover and exhaust valve housing, if the water should return too suddenly.

8) After 15 minutes, open the outlet valves a little so that the water can rise slowly in the cooling jackets.
Check the level at the test cocks.
9) Find and remedy the cause of the cooling failure.
10) Check for proper inclination of the freshwater outlet pipe, and for proper deaeration from the forward end of the engine.
11) Make a scavenge port inspection to ensure that no internal leakage has occurred. See Chapter 707, "CYLINDER CONDITION".
12) Carry out the turning of the engine with open indicator valve before staring the engine.

Cooling Water Treatment

1. Reducing Service Difficulties

△ To reduce service difficulties to a minimum, it is strongly recommended:

- effective protection against corrosion of the cooling water system by adding a chemical corrosion inhibitor. See Item 1.2.
- using the correct cooling water quality. See Item 1.3.
- effective venting of the system. See Item 1.4.
- checking the system and water during service. See Item 2.
- using the correct cleaning and inhibiting procedure. See Items 3 and 4.

1.1 Type of Damage

If the above-mentioned precautions are not taken, the following types of damage may occur:

- corrosion, which removes material from the attacked surface by a chemical process.
- corrosion fatigue, which may develop into cracks because of simultaneous corrosion and dynamic stresses.
- cavitation, which removes material because of local steam formation and subsequent condensation in the cooling water, due to high water velocity or vibrations.
- scale formation, which reduces the heat transfer, mostly due to lime deposits.

Corrosion and cavitation may reduce the lifetime and safety factors of the parts concerned.
Deposits will impair the heat transfer and may result in thermal overload of the components to be cooled.

1.2 Corrosion Inhibitors

Various types of inhibitors are available but, generally, only nitrite-borate based inhibitors are recommended.
A number of products marketed by major companies are specified in Item 6.

Cooling water treatment using emulsifiable anti-corrosion oils is not recommended, as such treatment involves the risk of uncontrolled deposits being formed on exposed surfaces, and furthermore represents an environmental problem.
The legislation for waste water, including cooling water, disposal and the possibility that cooling water from the freshwater generator may leak into the potable drinking water circuit, prohibits the use of chromate for cooling water treatment.

1.3 Cooling Water Quality

It is important to use the correct cooling water quality.
It is recommended to use deionized or distilled water (for example produced in the freshwater generator) as cooling water.

This prevents, to a wide extent, the formation of lime stone on cylinder liners and in cylinder covers, which would impair the heat transfer, and result in unacceptably high temperatures.

Before use, check that the following values are not exceeded:

– hardness : max. 9 °dH (= 9 ppm CaO)
– pH-valve : 7 ~ 8 (at 20 °C)
– chloride ion content : max. 50 ppm (mg/liter)
– sulphate ion content : max. 50 ppm (mg/liter)
– silicate : max. 25 ppm (mg/liter)

Check that there is no content of:
– sulphide
– chlorine
– ammonia

Softening of the water does not reduce its sulphate and chloride contents.

If deionized or distilled water cannot be obtained, normal drinking water can be used in exceptional cases.
Rain water, etc. must not be used, as it can be heavily contaminated.

1.4 Venting

The system, for 70 ~ 98MC(-C) engines, is fitted with a deaerating tank with alarm and with venting pipes which lead to the expansion tank.

2. Checking the System and Water

Check the cooling water system and the water at the intervals given below:
It is recommended to keep a record of all tests, to follow the condition and trend of the cooling water.

2.1 Regularly

Whenever practical, check the cooling water system for sludge or deposits.
Check at the cooling pipes, cooling bores, at the top of the cylinder and cover and exhaust valve bottom piece.

Sludge and deposits can be due to:
– contaminated cooling water system,
– zinc galvanised coatings in the freshwater cooling system.

Experience has shown that zinc galvanised coatings in the freshwater cooling system are often very susceptible to corrosion, which results in heavy sludge formation, even if the cooling water is correctly inhibited.
In addition, the initial descaling with acid will, to a great extent, remove any galvanised coating.
Therefore, generally, it is advised against the use of galvanised piping in the freshwater cooling system.

2.2 Once a Week

Take a water sample from the system during running.
Take the sample from the circulating system, i.e. not from the expansion tank or the pipes leading to the tank.

Check the condition of the cooling water.
Test kits are normally available from the inhibitor supplier.

Check:

– Inhibitor concentration.
  The concentration of inhibitor must not fall below the value recommended by supplier, as this will increase the risk of corrosion.
  When the supplier specifies a concentration range, it is recommended to maintain the concentration in the upper end.

– pH-value
  should be 8.5 ~ 10 measured at 20 °C.
  A decrease of the pH-value (or an increase of the sulphate content, if measured) can indicate exhaust gas contamination (leakage).
  The pH-value can be increased by adding inhibitor; however, if large quantities are necessary, it is recommended to change the water.

– Chloride content
  should not exceed 50 ppm (50 mg/liter).
  In exceptional cases, a maximum of 100 ppm can be accepted, however, the upper limit specified by the inhibitor supplier must be adhered to.
  An increase of the chlorine content can indicate salt water ingress.
  Trace and repair any leakages at the first opportunity.

If out-of-specification results are found, repeat the tests more frequently.

2.3 Every Third Month

Take a water sample from system during running, as descried in Item 2.2.
Send the sample for laboratory analysis, in particular to ascertain the contents of:
– inhibitor
– sulphate
– iron
– total salinity.

2.4 Once a Year

Empty, flush and refill the cooling water system.
Add the inhibitor.
See also Item 4.5.

2.5 Every Four-Five Years and after Long Time Out of Operation

Based on the regular checks, see Item 2.1, clean the cooling water system for oil-sludge, rust and lime.
Refill and add the inhibitor.
See Item 3 and 4.

2.6 Water Losses and Overhauling

Replace evaporated cooling water with non-inhibited water.
Replace water from leakages with inhibited water.

After overhauling, e.g., individual cylinders, add a new portion of inhibitor immediately after completing the job.

Check the inhibitor concentration any time a substantial amount of cooling water is changed or added.

3. Cleaning and Inhibiting

3.1 General

Carry out cleaning before inhibiting the cooling water system for the first time.
This ensures uniform inhibitor protection of the surfaces and improves the heat transfer.

During service, carry out cleaning and inhibiting every 4 ~ 5 years and after long time out of operation, see also Item 2.5.

Cleaning comprises degreasing to remove oil sludge and descaling to remove rust and lime deposits.

3.2 Cleaning Agents

Special ready-mixed cleaning agents can be obtained from companies specialising in cooling water treatment, and from the supplier of inhibitors. See Item 6.
These companies offer treatment, assistance and cooling water analysis.

The directions given by the supplier should always be closely followed.

The cleaning agents must not be able to damage the materials, seals, etc. It must also be ensured that the cleaning agents are compatible with all parts of the cooling system to avoid any damage.

The cleaning agents should not be directly admixed, but should be dissolved in water and then added to the cooling water system.

For degreasing, agents emulsified in water, as well as slightly alkaline agents, can be used.

⚠ WARNING
Ready-mixed agents, which involve the risk of fire, obviously must not be used.

For descaling, agents based on amino-sulphonic acid, citric acid and tartaric acid are especially recommended.
Use only inhibited acidic cleaning agents.

These acids are usually obtainable as solid substances, which are easily soluble in water, and do not emit poisonous vapours.

3.3 Inhibitors

See Item 1.2.

4. Cleaning and Inhibiting Procedure

4.1 General

⚠ The engine must be at a standstill during the cleaning procedure to avoid overheating during draining.

Normally, cleaning can be carried out without any dismantling of the engine.
Since cleaning can cause leaks to become apparent (in poorly assembled joints or partly defective gaskets), inspection should be carried out during the cleaning process.

4.2 Degreasing

⚠ WARNING
Carry out with care using the protective spectacles and gloves.

1) Prepare for degreasing.

Does the cooling water contain inhibitor ?
YES: Drain the system.
Fill up with clean tap water.
Follow the procedure below.
NO: Follow the procedure below.

Heat the water to 60 °C and circulate it continuously.
Drain to lowest water level in the expansion tank sight glass.

2) Add the degreasing agent.

Add the degreasing agent, preferably at the suction side of the running jacket water pump.
Use the amount of agent specified by the supplier
Drain again to the lowest level in the expansion tank if the cooling water system is filled-up, before all agents is applied.

3) Circulate the solution.

Circulate the agent for the period specified by the supplier.
Check and repair any leaks.

4) Drain and flush the system.

Drain the system completely.
This will also flush out any oil or grease settled in the expansion tank.
Fill up with clean tap water.
Circulate the water for 2 hours
Drain the system completely.
Proceed to the descaling procedure, see Item 4.3.

4.3 Descaling

⚠ WARNING
Carry out with care using protective spectacles and gloves.

On completing the degreasing procedure, see Item 4.2, apply this descaling procedure.

To avoid polluting the ocean with acid, it is recommended, if possible, to collect all the drained water that contains acid in a tank where it can be neutralised, for example by means of soda, before being led overboard.

1) Prepare for descaling.

Fill up with clean tap water.
Heat the water to 70 ~ 75 °C, and circulate it continuously.

Some ready-mixed cleaning agents are specified to be used at a lower temperature.
This maximum temperature must be adhered to.

2) Add the acid solution.

Dissolve the necessary dosage of acid compound in a clean iron drum, half filled with hot water.
Stir vigorously, e.g. using a stem hose.

– For engines that were treated before the sea trials, the lowest dosage recommended by the supplier will normally be sufficient.

– For untreated engines, a higher dosage, depending on the condition of the cooling system, will normally be necessary.

  The solubility of acids in water is often limited.
  This can necessitate descaling in two stages, with a new solution and clean water.
  Normally, the supplier specifies the maximum solubility.

Fill the drum completely with hot water while continuing to stir.
Slowly add the acid compound at the suction side of the jacket water cooling pump.
Drain some water from the system, if necessary.

3) Circulate the acid solution.

Keep the temperature of the water at the prescribed preheating temperature, and circulate it constantly.
The duration of the treatment will depend on the degree of fouling.

Normally, for engines that were treated before the trials, the shortest time recommended by the supplier will be sufficient.
For untreated engines, a longer time must be reckoned with.

Check every hour, for example with pH-paper, that the acid has not been neutralised.
A number of descaling preparations contains colour indicators which show the state of the solution.
If the acid content is exhausted, a new admixture dosage can be added, in which case the weakest recommended concentration should be used.

4) Neutralise any acid residues.

After completing the descaling, drain the system and flush with water.
The flushing is necessary to remove any debris that may have formed during the cleaning.
Continue the flushing until water is neutral (pH approx. 7).

Acid residues can be neutralised with clean tap water containing 10 kg soda per ton of water.
As an alternative to soda, sodium carbonate or sodium phosphate can be used in the same concentration.

Circulate the mixture for 30 minutes.
Drain and flush the system.
Continue to flush until the water is neutral (pH approx. 7).

Check the acid content of the system oil directly after the descaling, and again 24 hours later.
See Chapter 708, "Maintenance of the Circulating Oil", Item 4.5 and 5.

4.4 Filling up with Water

To prevent the formation of rust on the cleaned surfaces, fill up with water immediately after the cleaning.
Fill up, with deionizer or distilled water, to the lowest level in the expansion tank. See also Item 1.3.

4.5 Adding the Inhibitor

On account of the lack of hardness, the deionized or distilled water is relatively corrosive.
Add the corrosion inhibitor immediately after filling up.

1) Weigh out the quantity of inhibitors specified by the supplier.
It is recommended to use the maximum amount specified by the makers.
Dissolve the inhibitor in hot deionized or distilled water, using a clean iron drum.

2) Add the solution at the suction side of the running jacket water cooling pump or at another place where flow is ensured.

A liquid inhibitor may be entered directly into the system by equipment supplied by the maker. Follow the maker's instructions.

3) Fill up to normal water level, using deionized or distilled water.

4) Circulate the cooling water for not less than 24 hours.
This ensures the forming of a stable protection of the cooling surfaces.

5) Check the cooling water with a test kit (available from the inhibitor supplier) to ensure that an adequate inhibitor concentration has been obtained.
Check this every week, see Item 2.2.

5. Central Cooling System, Cleaning and Inhibiting

It is important for the proper functioning of this system to remove existing deposits of lime, rust and/or oil sludge in order to minimise the risk of blocking the coolers, and to ensure a good heat transfer.
Subsequent inhibiting shall, of course, be carried out.

For central cooling water systems, which are arranged with separate high and low temperature freshwater circuits, the careful, regular checks which are necessary for the jacket cooling water (= high temperature freshwater circuit), are not necessary for the low temperature freshwater circuit.

6. Nitrite-borate Corrosion Inhibitors for Fresh Cooling Water Treatment

The concentration of the inhibitor in the cooling water should be checked at regular intervals with the special instrument prepared by the supplier. Dosage amount of these inhibitors is specified by each maker.

Suitable cleaners can normally also supplied by these firms.

BRAND	SUPPLIERS
POLYCRIN I-175	KURITA WATER INDUSTRIES LTD. 4-7, Nishi-shinjuku 3-Chome, Shinjuku-ku, Tokyo 160-8383, Japan TEL: 03-3347-3387, FAX: 03-3347-3904
RUSMIN MK-45	KYOEISHA CHEMICAL CO.,LTD. 6-12, Minami-honmachi 2-Chome, Chuo-ku, Osaka 542-0012, Japan TEL: 06-6251-9371, FAX: 06-6251-9426
YUNIPROT PC-200	NIPPON YUKA KOGYO CO.,LTD. 9, Kaigan-dori 3-Chome, Naka-ku, Yokohama, Kanagawa 231-0002, Japan TEL: 045-201-8867, FAX: 045-201-8358
LIQUIDEWT	ASHLAND JAPAN CO.,LTD. 12-1, Kaigan-dori 3-Chome, Naka-ku, Yokohama, Kanagawa 231-0002, Japan TEL: 045-212-4741, FAX: 045-212-4754
DEWT-NC	(ditto)
HI MOL AM-5 HI MOL L-10	TAIHO INDUSTRIES CO.,LTD. 11-26, Mita 3-Chome, Minato-ku, Tokyo 108-0073, Japan TEL: 03-6414-5600, FAX: 03-6414-5620
NEOS PN-106S	NEOS CO.,LTD. 2-1, Kanouchou 6-Chome, Chuo-ku, Kobe, Hyogo 650-001, Japan TEL: 078-331-9381, FAX: 078-331-9318

The list is for guidance only.
We undertake no responsibility for difficulties that might caused by these or other water inhibitors / chemicals.

Plate 70901 Seawater Cooling System

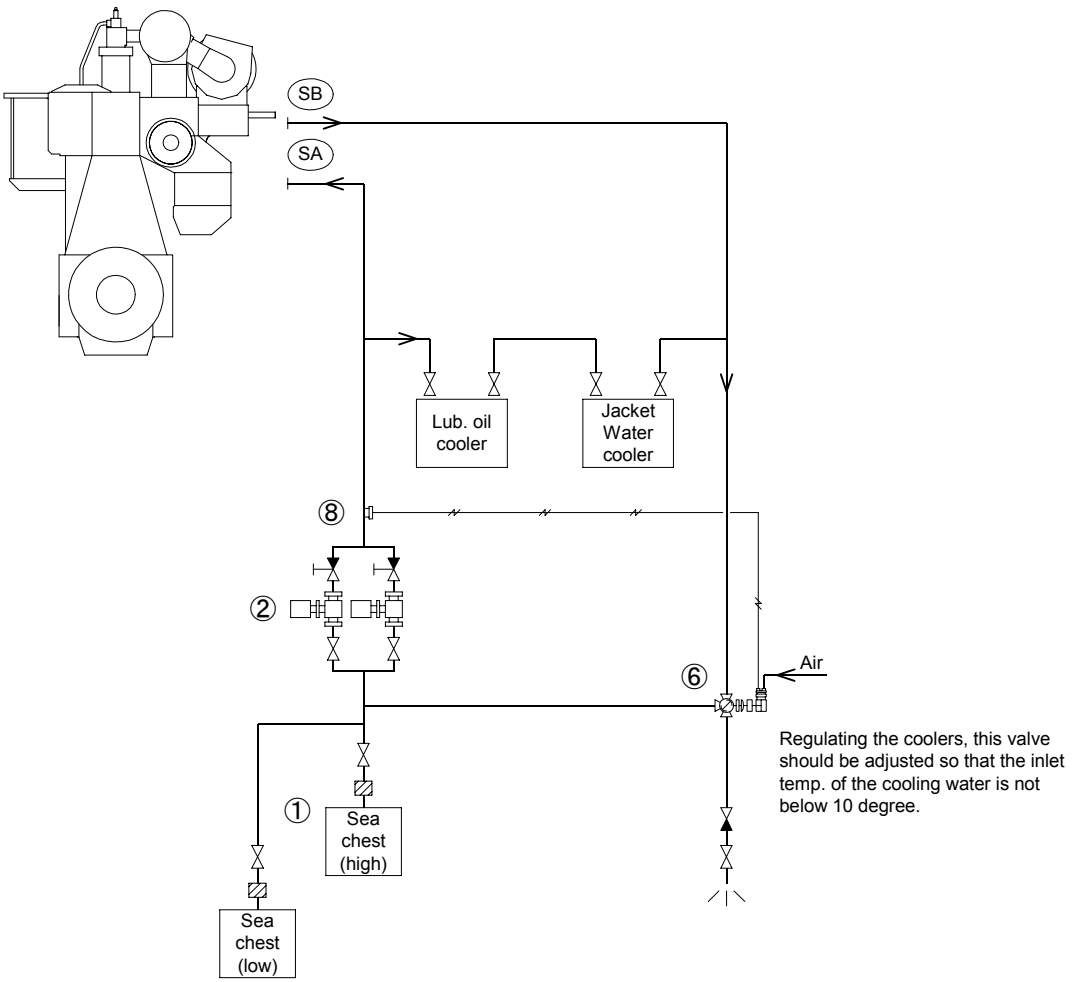

Plate 70902A Jacket Cooling Water System

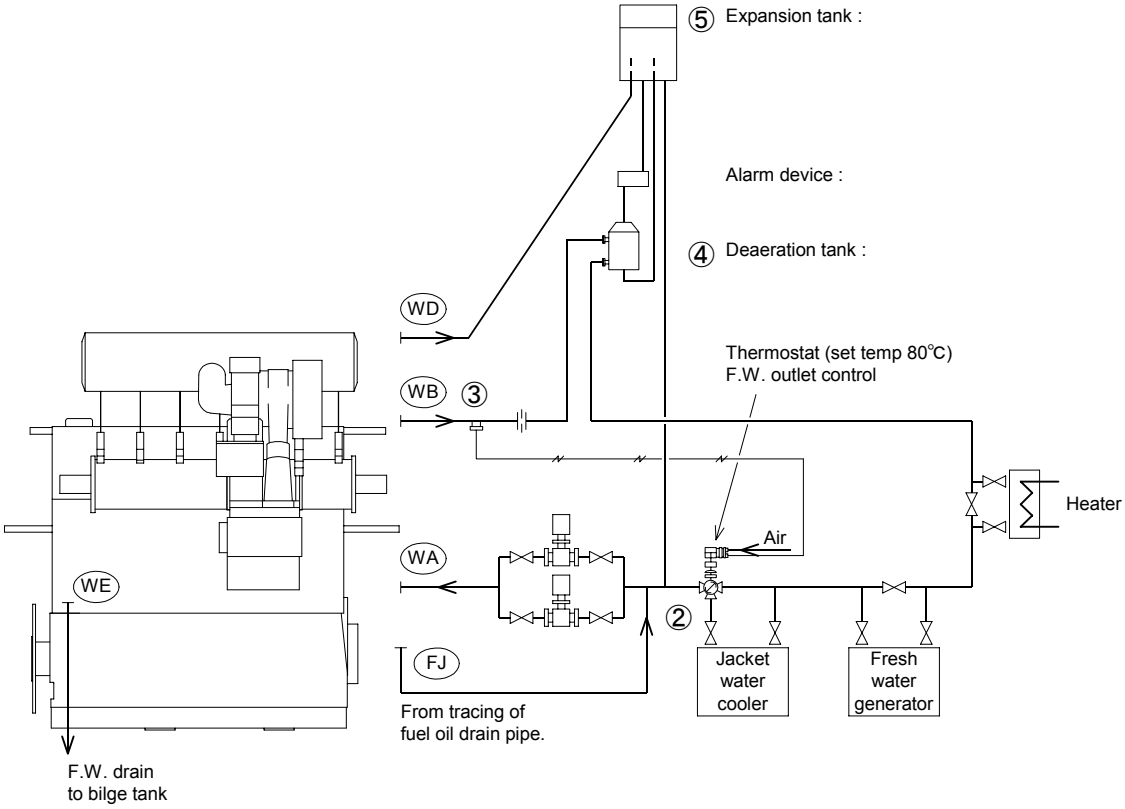

K98MC, K98MC-C
S90MC-C, K90MC, K90MC-C
S80MC-C, S80MC, L80MC, K80MC-C
S70MC-C, S70MC, L70MC-C, L70MC

Plate 70902B Jacket Cooling Water System

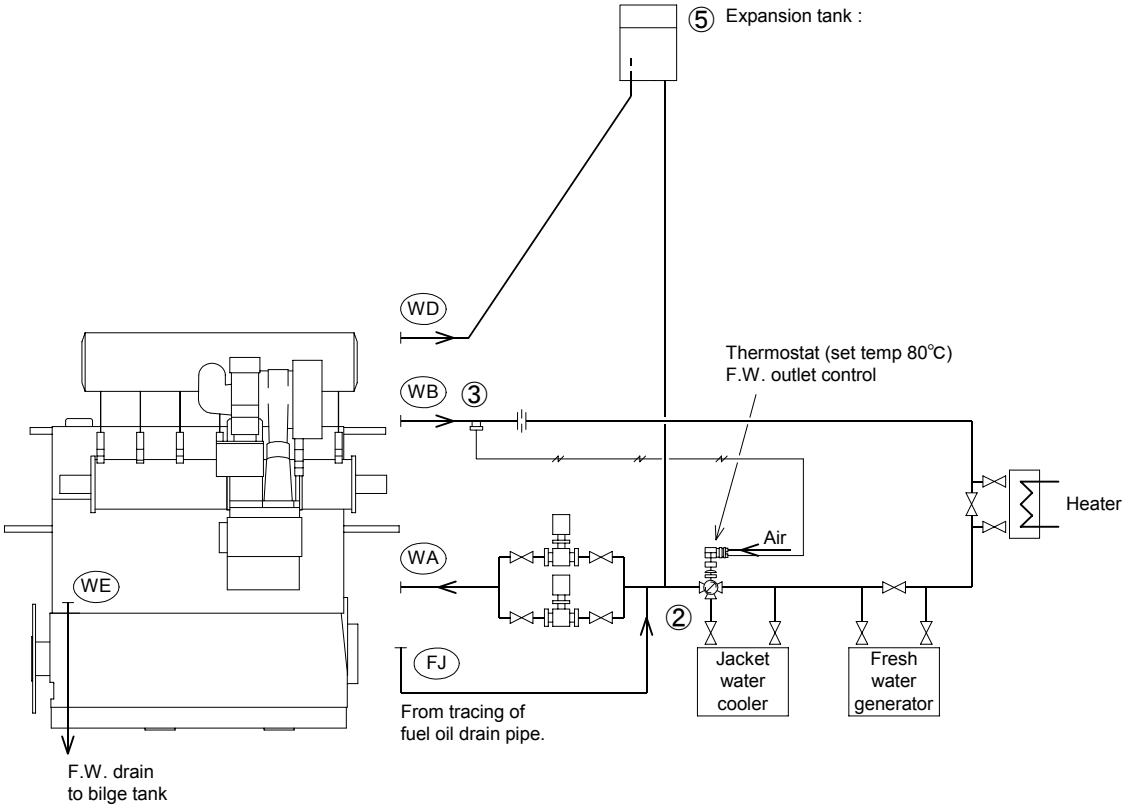

S60MC-C, S60MC, L60MC-C, L60MC
S50MC-C, S50MC, L50MC
S46MC-C

Plate 70902C Jacket Cooling Water System

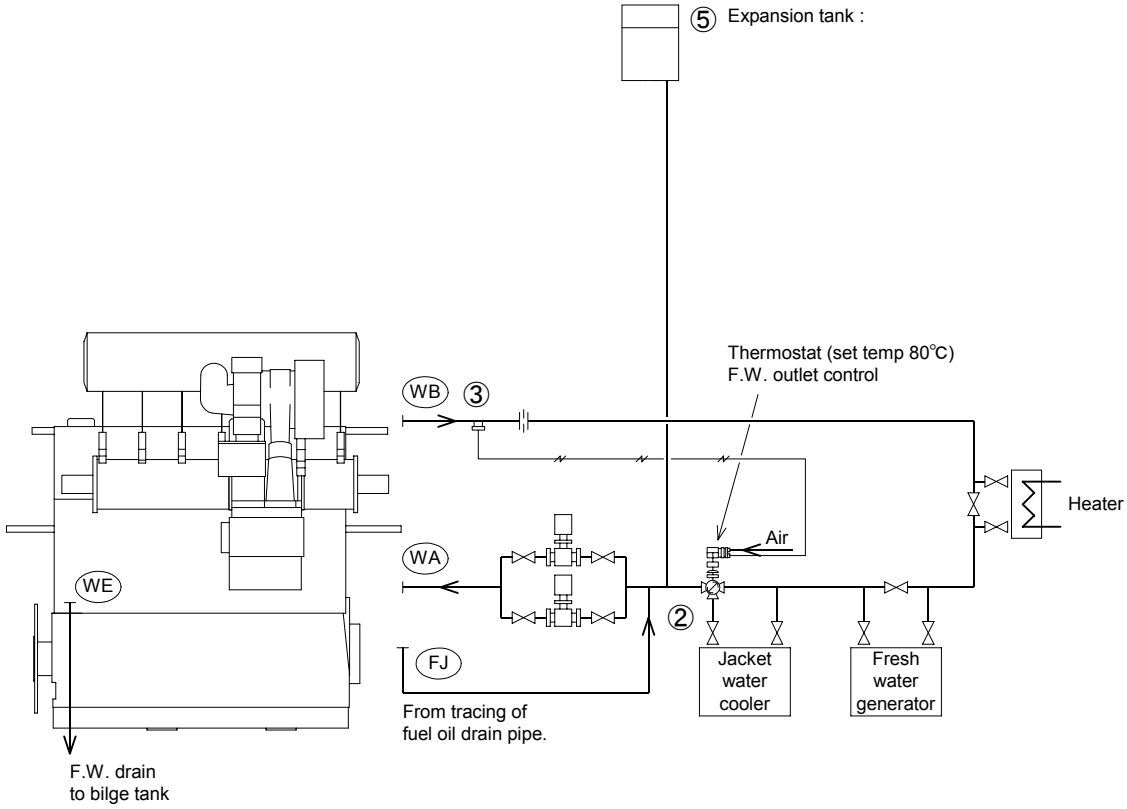

S42MC, L42MC
S35MC, L35MC
S26MC

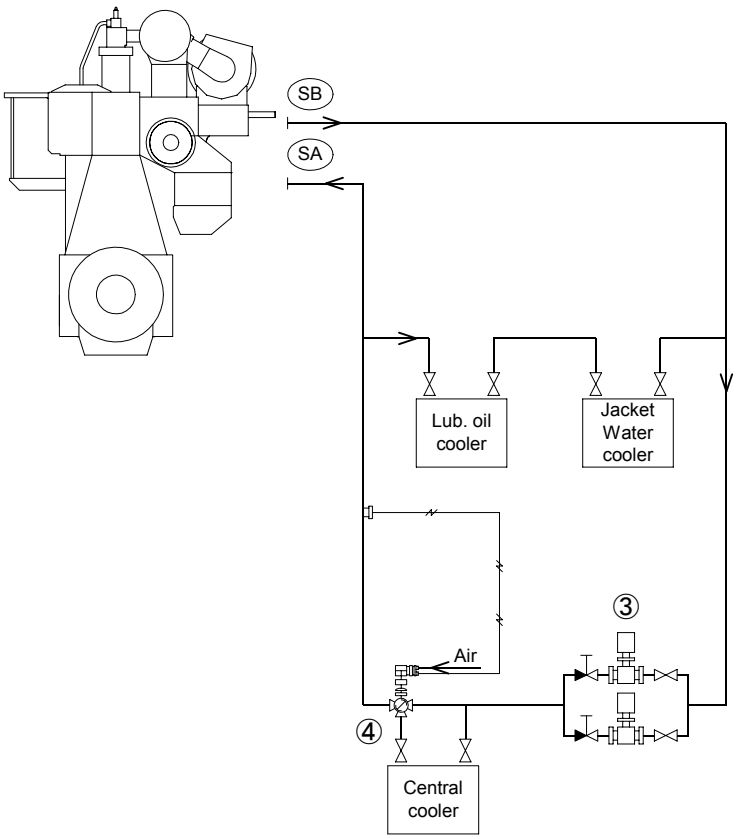
SB
SA
Lub. oil cooler
Jacket Water cooler
③
Air
④
Central cooler

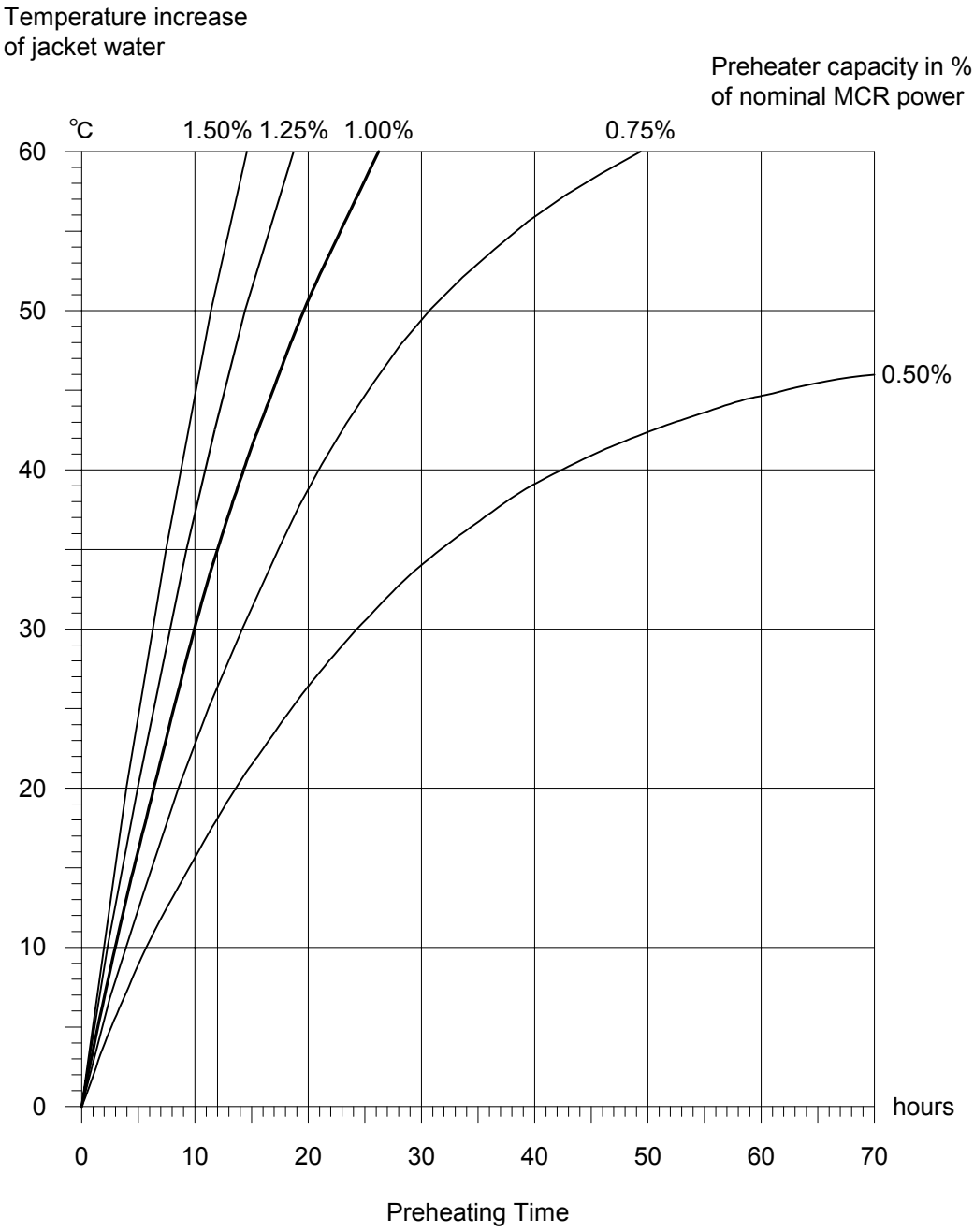

Preheating of jacket Cooling Water :

If the cooling water is heated by means of a preheater installed in the freshwater system, the curves above can be used.
The curves are drawn on the basis that, at the start of preheating, the engine and engine room temperature are equal.

Example :
A freshwater preheater, with a heating capacity equal to 1 % of nominal MCR engine shaft output, it able to heat the engine 35 °C (from 15 °C to 50 °C) in the course of 12 hours.

Cooling water preheating during standstill is described in Chapter 703, “Start-up, Manoeuvring and Arrival in Port”, Item 7, point 8).

701 SAFETY PRECAUTIONS AND ENGINE DATA

702 CHECKS DURING STANDSTILL PERIODS

703 STARTING, MANOEUVRING AND RUNNING

704 SPECIAL RUNNING CONDITINS

705 FUEL AND FUEL TREATMENT

706 PERFORMANCE EVALUATION & GENERAL OPERATION

707 CYLINDER CONDITION

708 BEARING AND CIRCULATING OIL

709 WATER COOLING SYSTEM

710 DATA

710-1 ENGINE DATA IN SERVICE

ENGINE DATA IN SERVICE

Ship's Name				TE	
Engine Type	DE:	Date		Total Run.Hour	hrs

				loading / unloading
Loading condition				
Engine speed				
Speed set air				
Fuel consumption				
Gauge board pressure	Before filter	kg/cm²		
	After filter	kg/cm²		
	Piston cooling	kg/cm²		
	Bearing	kg/cm²		
	Camshaft	kg/cm²		
	Turbo charger	kg/cm²		
	F.W.	kg/cm²		
	S.W.	kg/cm²		
Temp.	S.W.	℃		
	Engine room (upper)	℃		
F.O.	Eng. inlet Temp.	℃		
	Specific gravity at 15/ 4℃			
	Vis. at 50 C	cst.		
	Sulphur content	wt%		
	Calorific value	kcal/kg		

			Turbo charger		1	2	3	4
Pressure			Turbine speed	r.p.m				
			Filter pres. drop at blower side	mmWC				
			Press. drop across air cooler	mmWC				
			Scav. manifold	kg/cm2 (mmHg)				
			Scav. - exhaust receiver differential press.	mmHg				
			Press. drop across protecting grid	mmWC				
			Exhaust gas press. after turbo charger	mmWC				
Turbocharger	Scav. air		Cooler inlet	℃				
			Cooler outlet	℃				
			Scav. manifold	℃				
	Exh.gas		Turbine inlet	℃				
			Turbine outlet	℃				
	S.W.		Air cooler inlet	℃				
			Air cooler outlet	℃				
	F.W.		TC inlet	℃				
			TC outlet	℃				
	TC L.O.		TC inlet	℃				
			Turbine outlet	℃				
			Blower outlet	℃				

			1	2	3	4	5	6	7	8	9	10	11	12	Mean
Max. press. in cylinder		bar (kg/cm2)													
Comp. press. in cylinder		bar (kg/cm2)													
Fuel pump index															
Turbocharger	Exh. gas	℃													
	F.W. inlet	℃													
	F.W. outlet	℃													
	Piston co-oling oil inlet	℃													
	Piston co-oling oil outlet	℃													
Stuffing Box drain		L/day/cyl													
Scav. Box drain		L/day/cyl													
Feed rate of cyl. oil		L/day/cyl													

Ship's Name						
LO Code	TE	Date		Total run. hour		hrs

System oil (Analyst :)

LO consumption l/day.cyl			
Latest analysis	Sampling date		
	Total run. Hour at sampling		
	Specific gravity 15/4 ℃		
	Flash point ℃		
	Vis.	cst at 40℃	
		cst at 100℃	
	Residual carbon wt%		
	Ash content wt%		
	Sulfade ash wt%		
	Insoluble	Pentan wt%	
		Benzen wt%	
	TBN	ASTM D664 (JK2502) mgKOH/g	
		ASTM D2896 (JK2500) mgKOH/g	
	TAN mgKOH/g		
	Water content wt%		

Fuel oil (Analyst:)

Bunkering date			
Total run. Hour at bunkering			
Location			
Latest bunker analysis	Specific gravity 15/4 ℃		
	Vis.	Redwood 1 at 100°F	
		cst at 50℃	
	Sulphur content wt%		
	Ash content wt%		
	Residual carbon wt%		
	Asphalten wt%		
	Xylene wt%		
	Insoluble	Pentan wt%	
		Benzen wt%	
	Vanadium ppm		
	Sodium ppm		
	Water content wt%		
Name of fuel additive			
Feed rate of additive %			

Fresh water (Analyst:)

Latest analysis	Sampling date	
	Total run. Hour at sampling	
	pH	
	Inhibitor ppm	
	Cl ppm	

Memo

Used L.O./F.W. inhibitor (Write at first and at renewal of brand)		Brand			Renewal	
		Name	Maker code	Type code	Date	Hour
	System oil					
	Cylinder oil					
	camshaft oil					
	Turbine oil					
	Governor oil					
	Governor amp. oil					
	Gear oil (close)					
	Gear oil (open)					
	F.W. inhibitor					

710-2 TEST RESULT OF SHOP TRIAL

ISSUED : Oct. 5, 2009

TEST RESULTS of SHOP TRIAL

ENGINE TYPE : MITSUI-MAN B&W 6S50MC-C

OWNER : MESSRS. YA-SA SHIPPING INDUSTRY AND TRADING S.A.

YARD NO. : MITSUI TAMANO TS1774

JOB NO. : TE2517

ENGINE NO. : 5415

DIESEL ENGINE TEST GROUP
QUALITY ASSURANCE DEPARTMENT
MACHINERY FACTORY

APPROVED : K. Kobayashi

CHECKED : K. Tanaka

PREPARED : J. Yamaki

配付先	
船級協会	1
NK	
船主	5
造船所	
機デ設-計	
テクノ	1
MBD-東京	
MBD-デンマーク	1
控	2
計	10

DRAWING NO.
4T- 2517

TE2517

Data Sheet No.	2517100

Particulars of Engine

Engine Type	MITSUI-MAN B&W 6S50MC-C			
Number of Cylinder	6	Engine No.	5415	
Cylinder Bore x Stroke	500	mm x	2000	mm
OutPut (M.C.O.)	9070	kW	125.0	min^{-1}
Firing Order	1 - 5 - 3 - 4 - 2 - 6			

Particulars of TurboCharger

Type	MITSUI-MAN B&W TCA66-20025
Specification	A1C A4K339.8 M8 AD444
TurboCharger No.	4187

Note

Formula for Calculating OutPut (kW)

kW = K x Ne x W x 0.7355

K : Dynamometer Coeficient = 1 / 7.0235

W : kNm on Water Brake (kNm)

Ne : Engine Speed (min^{-1})

Specification of Used Oil at Shop Trial

1. Fuel Oil

LSA by NIPPON OIL CORPORATION

Specific Gravity	(15/4 ℃)	:	0.8569
Flash Point	(℃)	:	---
Viscosity	(Centi Stokes at50 ℃)	:	2.845
Residual Carbon	(10%) (wt %)	:	---
Ash	(wt %)	:	---
Water	(Vol. %)	:	---
Sulfur	(wt %)	:	0.06
Net Cal. Value	(kJ/kg)	:	42490

2. System Oil, CamShaft Oil

JOMO RIX TURBINE 100 by JAPAN ENERGY CORPORATION

3. Cylinder Oil

MOBIL GARD 570 by MOBIL OIL CO., LTD.

4. TurboCharger Oil

JOMO RIX TURBINE 100 by JAPAN ENERGY CORPORATION

TE2517 | Data Sheet No. 2517110

Summary Data of Shop Trial

Remarks
Temperature of exh. gas at cylinder outlet
is measured by ship's thermo-sensor.

Approved	
Checked	
Drawn	

Date		Oct. 5, 2009							
Data Sheet No.		2517111	2517112	2517113	2517114	2517115			
Load	%	25	50	75	100	110			
Room Temp.	℃	22.8	22.6	23.0	23.4	23.6			
Barom. Press.	hPa	1006	1006	1006	1006	1006			
Engine Speed	min^{-1}	78.7	99.2	113.6	125.0	129.0			
Output	kW	2272	4527	6828	9078	9965			
Fuel Oil Temp.	℃	28	29	29	30	30			
Specific Fuel Oil Consump. g/kW/Hr	Measured	182.7	173.9	170.0	175.0	178.7			
	1) LCV correction	181.8	173.0	169.2	174.1	177.8			
	2) ISO reference	---	---	169.1	---	---			
Pmax.	bar	73.7	104.8	139.3	150.0	149.5			
Pcomp.	bar	52.8	81.5	113.3	139.3	150.0			
Pump Mark Index		37.5	51.7	63.0	75.8	81.8			
Exh. Gas Temp. Cyl. Outlet	℃	276	311	329	357	387			
Scav. Air	Temp. ℃	33.0	28.6	29.7	35.4	36.8			
	Press. MPa	0.039	0.114	0.192	0.260	0.289			
Turbo Charger Speed	min^{-1} No. 1	6350	10450	12900	14400	15100			
	No. 2	---	---	---	---	---			
	No. 3	---	---	---	---	---			
	No. 4	---	---	---	---	---			
Exh. Gas Temp. T/C Inlet	℃ No. 1	275	319	346	394	432			
	No. 2	---	---	---	---	---			
	No. 3	---	---	---	---	---			
	No. 4	---	---	---	---	---			
Exh. Gas Temp. T/C Outlet	℃ No. 1	256	252	235	250	271			
	No. 2	---	---	---	---	---			
	No. 3	---	---	---	---	---			
	No. 4	---	---	---	---	---			

Note : 1) SFOC is corrected to LCV 42700 kJ/kg
2) SFOC is corrected to ISO reference conditions.

TE2517 A/B running Humidity:76.0%

Data Sheet No.	2517111
Date :	Oct. 5, 2009
Measurement Time :	8:40

Data Sheet of 25 % Load Test

Ambient Condition Room Temp. 22.8 ℃ Barometric Press.: 1006 hPa

Engine Speed	W/B Weight	OutPut(kW)	Handle Position	Governor Position	Speed Set Air Press.
78.7 min^{-1}	275.7 kNm	2272 kW	5.0	39	--- MPa

Inlet	Main Lub. Oil	Piston Coolig Oil	CamShaft Lub. Oil	T/C Lub. Oil	Fuel Oil	Cooling Fresh Water	Charge Air Coolant	Actuator Pilot Air
Press. MPa	0.20	0.22	---	0.20	0.78	0.30	0.13	0
Temp. ℃	42		---	42	28	73	25.1	

Cylinder No.		Ave.	1	2	3	4	5	6	7	8	9	10	11	12
Pmax. bar		73.7	74	73	74	74	74	73						
Pcomp. bar		52.8	53	53	53	53	52	53						
Fuel Pump	Actuator Index	---	1.0	0.5	1.4	0.7	0.7	0.0						
	Pump Mark Index	37.5	38	37	38	37	37	38						
Exh. Gas Temp. Cyl. Outlet ℃		276	283	278	267	275	269	286						
C.F.W. Temp. Cyl. Outlet ℃		78.0	78	78	78	78	78	78						
P.C.O. Temp. Cyl. Outlet ℃		46.0	46	46	46	46	46	46						

Air Cooler					
No.			1		
Press. Drop (kPa)			0.62		
Temp. (℃)	Air	In	60		
		Out	---		
	Water	In	25.1		
		Out	28		

Scavenging Air	
Pressure (MPa)	Temperature (℃)
0.039	33.0
Exh. Gas Receiver Pressure	0.031 MPa

Specific Fuel Oil Consumption (SFOC) (g/kW/Hr)	
*1 Mesured Value	LCV Corrected to 42700 kJ/kg
182.7	181.8

Turbo Charger		Speed (min^{-1})	Intake Air		Exhaust Gas			Lub. Oil Temp.		F.W. Temp.
			Temp. (℃)	Filter Press. Drop (kPa)	Inlet Temp. (℃)	Outlet Temp. (℃)	Back Press. (kPa)	Inlet (℃)	Outlet (℃)	Outlet (℃)
T/C	No. 1	6350	26.4	0.10	275	256	0.20	42	49	---

Note: *1 Marked SFOC is Corrected by F.O. Drain

Thrust Brg. Seg. Temp. : 43 ℃

F.O. Drain : 2.0 g/kW/Hr

TE2517 Humidity:78.9%

Data Sheet No.	2517112
Date :	Oct. 5, 2009
Measurement Time :	9:10

Data Sheet of 50 % Load Test

Ambient Condition Room Temp. 22.6 ℃ Barometric Press. : 1006 hPa

Engine Speed	W/B Weight	OutPut (kW)	Handle Position	Governor Position	Speed Set Air Press.
99.2 min^{-1}	435.8 kNm	4527 kW	6.9	53	--- MPa

Inlet	Main Lub. Oil	Piston Coolig Oil	CamShaft Lub. Oil	T/C Lub. Oil	Fuel Oil	Cooling Fresh Water	Charge Air Coolant	Actuator Pilot Air
Press. MPa	0.21	0.22	---	0.20	0.78	0.30	0.13	0
Temp. ℃	42		---	42	29	73	24.8	

Cylinder No.		Ave.	1	2	3	4	5	6	7	8	9	10	11	12
Pmax. bar		104.8	105	104	105	105	105	105						
Pcomp. bar		81.5	81	81	82	81	82	82						
Fuel Pump	Actuator Index	---	1.0	0.5	1.4	0.7	0.7	0.0						
	Pump Mark Index	51.7	52	52	51	51	52	52						
Exh. Gas Temp. Cyl. Outlet ℃		311	311	308	308	307	307	325						
C.F.W. Temp. Cyl. Outlet ℃		79.0	79	79	79	79	79	79						
P.C.O. Temp. Cyl. Outlet ℃		47.3	47	47	48	48	47	47						

Air Cooler					
No.			1		
Press. Drop (kPa)			1.96		
Temp. (℃)	Air	In	115		
		Out	---		
	Water	In	24.8		
		Out	31		

Scavenging Air	
Pressure (MPa)	Temperature (℃)
0.114	28.6
Exh. Gas Receiver Pressure	0.094 MPa

Specific Fuel Oil Consumption (SFOC) (g/kW/Hr)	
*1 Mesured Value	LCV Corrected to 42700 kJ/kg
173.9	173.0

Turbo Charger		Speed (min^{-1})	Intake Air		Exhaust Gas			Lub. Oil Temp.		F.W. Temp.
			Temp. (℃)	Filter Press. Drop (kPa)	Inlet Temp. (℃)	Outlet Temp. (℃)	Back Press. (kPa)	Inlet (℃)	Outlet (℃)	Outlet (℃)
T/C	No. 1	10450	26.2	0.23	319	252	0.93	42	54	---

Note: *1 Marked SFOC is Corrected by F.O. Drain

Thrust Brg. Seg. Temp. : 43 ℃

F.O. Drain : 1.1 g/kW/Hr

TE2517 Humidity:76.1%

Data Sheet No.	2517113
Date	: Oct. 5, 2009
Measurement Time	: 9:40

Data Sheet of 75 % Load Test

Ambient Condition Room Temp. 23.0 ℃ Barometric Press. : 1006 hPa

Engine Speed	W/B Weight	OutPut (kW)	Handle Position	Governor Position	Speed Set Air Press.
113.6 min^{-1}	574.0 kNm	6828 kW	8.2	64	--- MPa

Inlet	Main Lub. Oil	Piston Coolig Oil	CamShaft Lub. Oil	T/C Lub. Oil	Fuel Oil	Cooling Fresh Water	Charge Air Coolant	Actuator Pilot Air
Press. MPa	0.20	0.21	---	0.19	0.78	0.30	0.13	0.16
Temp. ℃	43		---	43	29	73	24.7	

Cylinder No.		Ave.	1	2	3	4	5	6	7	8	9	10	11	12
Pmax. bar		139.3	139	140	139	139	140	139						
Pcomp. bar		113.3	113	114	113	113	113	114						
Fuel Pump	Actuator Index	---	3.4	2.9	3.7	3.1	3.1	2.4						
	Pump Mark Index	63.0	63	63	63	63	63	63						
Exh. Gas Temp. Cyl. Outlet ℃		329	327	323	321	333	332	338						
C.F.W. Temp. Cyl. Outlet ℃		81.0	81	81	81	81	81	81						
P.C.O. Temp. Cyl. Outlet ℃		49.0	49	49	49	49	49	49						

Air Cooler					
No.			1		
Press. Drop (kPa)			2.55		
Temp. (℃)	Air	In	160		
		Out	---		
	Water	In	24.7		
		Out	34		

Scavenging Air	
Pressure (MPa)	Temperature (℃)
0.192	29.7
Exh. Gas Receiver Pressure	0.168 MPa

Specific Fuel Oil Consumption (SFOC) (g/kW/Hr)	
*1 Measured Value	LCV Corrected to 42700 kJ/kg
170.0	169.2

Turbo Charger		Speed (min^{-1})	Intake Air		Exhaust Gas			Lub. Oil Temp.		F.W. Temp.
			Temp. (℃)	Filter Press. Drop (kPa)	Inlet Temp. (℃)	Outlet Temp. (℃)	Back Press. (kPa)	Inlet (℃)	Outlet (℃)	Outlet (℃)
T/C	No. 1	12900	28.5	0.46	346	235	1.76	43	59	---

Note: SFOC at this load is guaranteed under ISO conditions.

Guaranteed SFOC: 169.2 g/kW/Hr + 3% ISO Corrected SFOC : 169.1 g/kW/Hr

Measured SFOC is corrected to ISO Reference Conditions according to the following conversion factors.

F.O. Drain : 0.7 g/kW/Hr

Parameter	Reference Condition	Conversion Factors
Room Temp.	25 ℃	+0.2%/10℃ Rise
Barometric Pres.	1000 hPa	-0.02%/10 hPa Rise
Air Cool. Water Temp.	25 ℃	+0.6%/10℃ Rise
F.O. Lower Cal. Value	42700 kJ/kg	-1.0%/1% Rise

Thrust Brg. Seg. Temp. : 44 ℃

*1 Marked SFOC is Corrected by F.O. Drain

TE2517 Humidity:82.4%

Data Sheet No.	2517114
Date :	Oct. 5, 2009
Measurement Time :	10:30

Data Sheet of 100 % Load Test

Ambient Condition Room Temp. 23.4 ℃ Barometric Press.: 1006 hPa

Engine Speed	W/B Weight	OutPut(kW)	Handle Position	Governor Position	Speed Set Air Press.
125.0 min^{-1}	693.5 kNm	9078 kW	9.3	77	--- MPa

Inlet	Main Lub. Oil	Piston Coolig Oil	CamShaft Lub. Oil	T/C Lub. Oil	Fuel Oil	Cooling Fresh Water	Charge Air Coolant	Actuator Pilot Air
Press. MPa	0.21	0.23	---	0.21	0.78	0.30	0.12	0.12
Temp. ℃	43		---	43	30	73	25.2	

Cylinder No.		Ave.	1	2	3	4	5	6	7	8	9	10	11	12
Pmax. bar		150.0	150	150	150	150	150	150						
Pcomp. bar		139.3	140	140	139	139	139	139						
Fuel Pump	Actuator Index	---	2.9	2.4	3.2	2.6	2.6	1.8						
	Pump Mark Index	75.8	76	76	76	75	76	76						
Exh. Gas Temp. Cyl. Outlet ℃		357	355	356	346	361	358	367						
C.F.W. Temp. Cyl. Outlet ℃		81.2	81	81	81	82	81	81						
P.C.O. Temp. Cyl. Outlet ℃		50.7	50	50	51	51	51	51						

Air Cooler					
No.			1		
Press. Drop (kPa)			3.14		
Temp. (℃)	Air	In	190		
		Out	---		
	Water	In	25.2		
		Out	36		

Scavenging Air	
Pressure (MPa)	Temperature (℃)
0.260	35.4
Exh. Gas Receiver Pressure	0.235 MPa

Specific Fuel Oil Consumption (SFOC) (g/kW/Hr)	
*1 Mesured Value	LCV Corrected to 42700 kJ/kg
175.0	174.1

Turbo Charger		Speed (min^{-1})	Intake Air		Exhaust Gas			Lub. Oil Temp.		F.W. Temp.
			Temp. (℃)	Filter Press. Drop (kPa)	Inlet Temp. (℃)	Outlet Temp. (℃)	Back Press. (kPa)	Inlet (℃)	Outlet (℃)	Outlet (℃)
T/C	No.1	14400	30.8	0.64	394	250	2.50	43	63	---

Note: *1 Marked SFOC is Corrected by F.O. Drain

Thrust Brg.Seg. Temp. : 44 ℃

F.O. Drain : 0.5 g/kW/Hr

TE2517 Humidity:73.4%

Data Sheet No.	2517115
Date :	Oct. 5, 2009
Measurement Time :	11:10

Data Sheet of 110 % Load Test

Ambient Condition Room Temp. 23.6 ℃ Barometric Press. : 1006 hPa

Engine Speed	W/B Weight	OutPut(kW)	Handle Position	Governor Position	Speed Set Air Press.
129.0 min^{-1}	737.7 kNm	9965 kW	9.7	84	---- MPa

Inlet	Main Lub. Oil	Piston Coolig Oil	CamShaft Lub. Oil	T/C Lub. Oil	Fuel Oil	Cooling Fresh Water	Charge Air Coolant	Actuator Pilot Air
Press. MPa	0.21	0.23	---	0.21	0.78	0.30	0.12	0
Temp. ℃	42		---	42	30	73	25.6	

Cylinder No.		Ave.	1	2	3	4	5	6	7	8	9	10	11	12
Pmax. bar		149.5	149	149	150	150	149	150						
Pcomp. bar		150.0	150	150	150	150	150	150						
Fuel Pump	Actuator Index	---	1.0	0.5	1.4	0.7	0.7	0.0						
	Pump Mark Index	81.8	82	82	82	81	82	82						
Exh. Gas Temp. Cyl. Outlet ℃		387	384	385	376	389	387	398						
C.F.W. Temp. Cyl. Outlet ℃		82.0	82	82	82	82	82	82						
P.C.O. Temp. Cyl. Outlet ℃		50.0	50	50	50	50	50	50						

Air Cooler					
No.			1		
Press. Drop (kPa)			3.43		
Temp. (℃)	Air	In	210		
		Out	---		
	Water	In	25.6		
		Out	37		

Scavenging Air	
Pressure (MPa)	Temperature (℃)
0.289	36.8
Exh. Gas Receiver Pressure	0.263 MPa

Specific Fuel Oil Consumption (SFOC) (g/kW/Hr)	
*1 Mesured Value	LCV Corrected to 42700 kJ/kg
178.7	177.8

Turbo Charger		Speed (min^{-1})	Intake Air		Exhaust Gas			Lub.Oil Temp.		F.W.Temp.
			Temp. (℃)	Filter Press. Drop (kPa)	Inlet Temp. (℃)	Outlet Temp. (℃)	Back Press. (kPa)	Inlet (℃)	Outlet (℃)	Outlet (℃)
T/C	No.1	15100	30.5	0.71	432	271	2.94	42	63	---

Note: *1 Marked SFOC is Corrected by F.O. Drain

Thrust Brg.Seg. Temp. : 44 ℃

F.O. Drain : 0.4 g/kW/Hr

CHARACTERISTIC CURVE

DATA SHEET NO.
251711G

JOB NO.: TE2517 ENGINE TYPE: 6S50MC-C

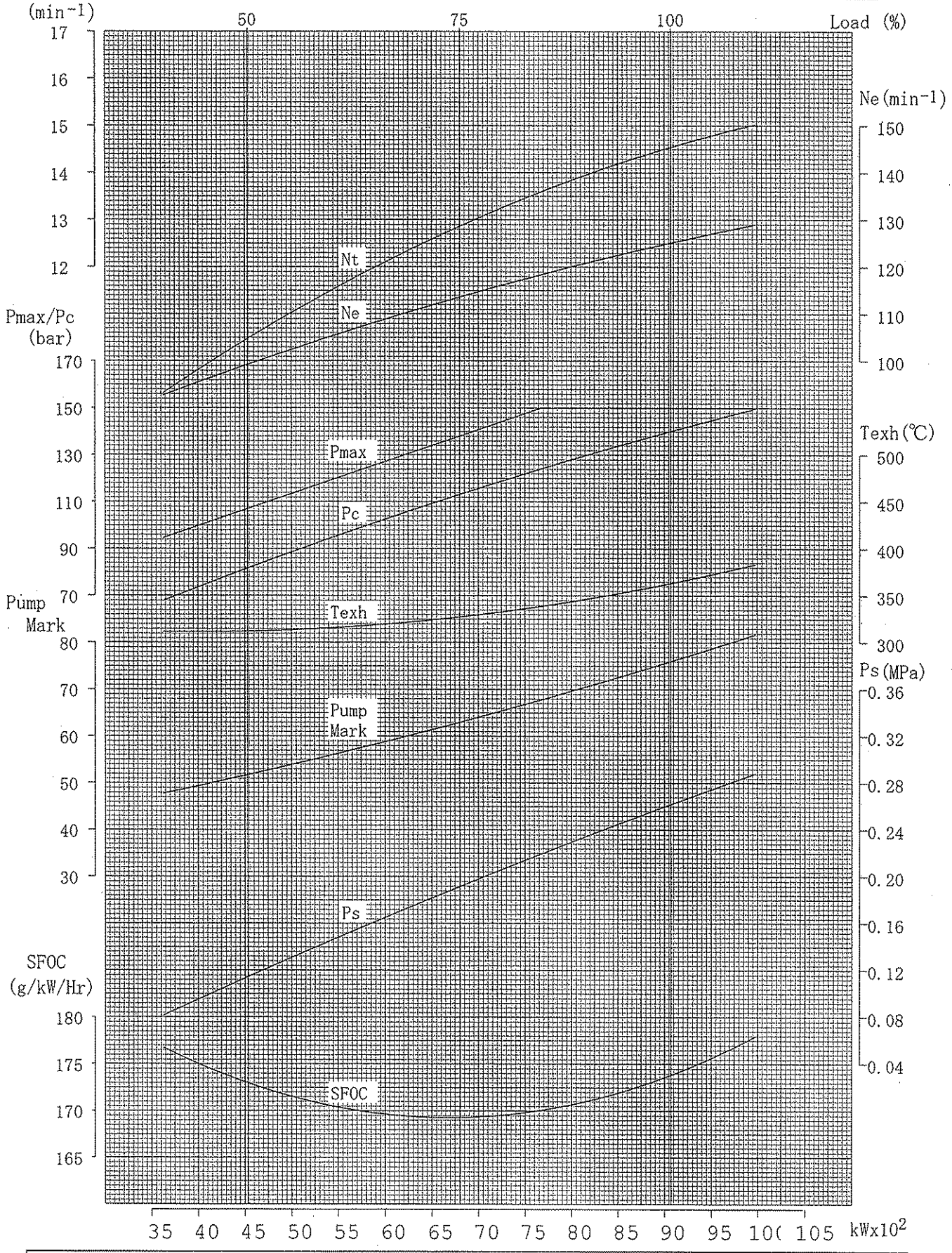

Nt:Turbo Charger Speed Ne:Engine Speed Texh:Exhaust Gas Temp. Cyl. Outlet
Ps:Scav. Air Press. Pmax/Pc:Max./Compression Cyl. Press.

TE2517

Data Sheet No.	2517140

Starting Test

(Unit : MPa)

Times	Ahead Air Press	Times	Astern Air Press	Times	Ahead Air Press	Times	Astern Air Press
1	2.80	2	2.47	17		18	
3	2.22	4	2.03	19		20	
5	1.84	6	1.70	21		22	
7	1.56	8	1.45	23		24	
9	1.32	10	1.21	25		26	
11	1.12	12	1.02	27		28	
13	0.92	14	0.82×	29		30	
15		16		31		32	

Starting Air Capacity	5.19	m^3
Room Temp.	26	℃
F.W. Temp.	73	℃
L.O. Temp	42	℃

Min. Available Pres.	0.92	MPa
Failure Press.	0.82	MPa

Governor Test

Instant Variation : 4 %

(130 min^{-1})

(125 min^{-1}) (125 min^{-1})

Emergency Shut Down Test

No.	Item	Set Value	Result	No.	Item	Set Value	Result
1	Over Speed	136 min^{-1}	134 min^{-1}				
2	Manual Stop	C/R - E/S	Good				
3	Main L.O. Low Press.	0.08 MPa	0.08 MPa				

Miscellaneous Test

Item	Result
Turning Interlock Test	Good
Engine Side Manoeuvering Test	Good

Minimum Revolution Test

Engine Speed (min^{-1})	Weight (kNm)	Output (kW)	Handle Notch	Pump Mark	TurboCharger Speed			
					No. 1 (min^{-1})	No. 2 (min^{-1})	No. 3 (min^{-1})	No. 4 (min^{-1})
---	---	---	---	---	---	---	---	---

710-3 INSTRUCTION MANUAL FOR ADJUSTMENT & MEASUREMENT

ISSUED : Oct. 28, 2009

INSTRUCTION BOOK

MITSUI-MAN B&W DIESEL ENGINE
K-1 DATA
(INSTRUCTION MANUAL FOR ADJUSTMENT & MEASUREMENT)

S50

MC-C

OWNER	:	MESSRS. YA-SA SHIPPING INDUSTRY AND TRADING S. A.
YARD NO.	:	MITSUI TAMANO TS1774
ENGINE TYPE	:	MITSUI-MAN B&W 6S50MC-C
ENGINE NO.	:	5415
JOB NO.	:	TE2517
TRIAL DATE	:	Oct. 5, 2009
CLASSIFICATION	:	NK-M0

DIESEL ENGINE TEST GROUP
QUALITY ASSURANCE DEPARTMENT

APPROVED	:	
CHECKED	:	
PREPARED	:	

DRAWING NO.						
7	T	-	2	5	1	7

MITSUI ENGINEERING & SHIPBUILDING CO., LTD.

INDEX

A) LIST of PRINCIPAL ITEMS

B) STANDARD DIMENSION, CLEARANCE, & SETTING

C) MANUAL for TIMING ADJUSTMENT

D) MANUAL for TIGHTENING-UP MAIN PARTS

E) WEIGHT LIST of MAIN PARTS

F) OPERATION & CONTROL

G) DATA SHEET

This book is specially made for the designated plant. If minor differences are found between supplied other instruction books and this book, this book should be applied preferentially.

A) LIST of PRINCIPAL ITEMS

MAIN ENGINE P-1-1

LOAD DIAGRAM P-1-2

PRINCIPAL ITEMS of ACCESSORIES P-2-1

B) STANDARD DIMENSION, CLEARANCE, & SETTING

BEARING

BEARING CLEARANCE P-3-1

EXHAUST VALVE

GENERAL VIEW P-4-1

DRIVING PISTON P-4-2

AIR PISTON, VALVE SPINDLE & BUSH P-4-3

VALVE SPINDLE & SEAT P-4-4

WORKING AIR LINE P-4-5

ADJUSTMENT of DRIVING PISTON HEIGHT P-4-6

FUEL VALVE

OPENING PRESSURE & VALVE LIFT P-5-1

FUEL VALVE TEST DEVICE P-5-2～4

PISTON

PISTON CROWN, RING, & RING GROOVE P-6-1～2

HIGH PRESSURE PIPE

FITTING METHOD of HIGH PRESSURE PIPE P-7-1

STUFFING BOX

STUFFING BOX & RING P-8-1

CYLINDER LINER

CYLINDER LINER & CYLINDER JACKET P-9-1

CHAIN & CHAIN WHEEL

CHAIN & CHAIN WHEEL ARRANGEMENT P-10-1

ADJUSTMENT METHOD of MAIN CHAIN TIGHTENER P-10-2

~~BALANCER & BALANCER CHAIN TIGHTENER P-10-3~~

TURBOCHARGER P-11-1

C) MANUAL for TIMING ADJUSTMENT

REVERSING MECHANISM P-12-1
STARTING EQUIPMENT P-12-2
CAM SHAFT
ADJUSTMENT METHOD of CAM SHAFT TIMING P-13-1
FUEL PUMP
GENERAL VIEW P-14-1
FUEL PUMP CAM LEAD P-14-2
MEASUREMENT of FUEL PUMP CAM LEAD P-14-3
MAX. PRESSURE ADJUSTMENT P-14-4 ~ 6
EXHAUST VALVE GEAR
EXHAUST CAM ADVANCED ANGLE P-15-1
CYLINDER LUBRICATION GENERAL DESCRIPTION P-16-1
OIL FEED RATE P-16-2
FEED RATE for RUNNING-IN P-16-3 ~ 4
CALCULATION of CYLINDER FEED RATE P-16-5 ~ 6

D) MANUAL for TIGHTENING-UP MAIN PARTS

TIGHTENING TABLE
TIGHTENING by HYDRAULIC OIL JACK P-17-1
PISTON PISTON ROD CROSS HEAD & CONNECTING ROD P-17-2
STARTING VALVE & MAIN BEARING TIGHTENING P-18-1
CYLINDER COVER TIGHTENING P-19-1

E) WEIGHT LIST of MAIN PART

CYLINDER COVER & EXHAUST VALVE P-20-1
PISTON & CROSSHEAD P-21-1
CYLINDER LINER & CONNECTING ROD P-22-1
CROSSHEAD PIN & CRANK PIN BEARING P-23-1
OTHER PARTS P-24-1

F) OPERATION & CONTROL
GOVERNOR
GOVERNOR ACTUATOR P-25-1
GOVERNOR P-25-2
LOAD LIMIT LINE P-25-3
ENGINE PROTECTING DEVICE
SAFETY VALVE SETTING TABLE P-26-1
THERMAL & PRESSURE SWITCH SETTING TABLE P-26-3
REV. SETTING, TIMER RELAY & LIMIT SWITCH P-26-4
BRIDGE MANOEUVRING SYSTEM
REV. SETTING, PRESSURE SWITCH & TIMER RELAY P-27-1
PRESSURE & TEMPERATURE
TABLE of STANDARD PRESSURE & TEMPERATURE P-28-1
EMERGENCY RUNNING
FUEL PUMP CUT OFF METHOD P-29-1
EXHAUST VALVE CUT OFF METHOD P-30-1
TURBOCHARGER CUT OFF RUNNING P-31-1
POWER TABLE for EMERGENCY RUNNING P-32-1
TURBOCHARGER CLEANING
CLEANING TURBINE by WATER P-33-1
WATER DRAIN 3-WAY VALVE OPERATION P-33-2
CLEANING TURBINE by SOLID MATERIAL P-33-3 ~ 4
~~CLEANING COMPRESSOR by WATER P-33-5~~

G) DATA SHEET P-34-1

MAIN ENGINE

Type ····· MITSUI-M.A.N. B&W 6S50MC-C
2 Cycle Single Acting Turbo-Charged Cross-Head
Type Marine Diesel Engine

Cylinder Bore ·····	500 mm		
Stroke ·····	2000 mm		
Maximum Continuous Output ·····	9070 kW /	125.0	min^{-1}
(Rating)	(----- BHP)		
Continuous Service Output ·····	6800 kW /	113.6	min^{-1}
(Rating)	(---- BHP)		

Firing Order : 1 - 5 - 3 - 4 - 2 - 6

LOAD DIAGRAM (Ref. P-1-2)

Allowable Operating Range
The area between lines ② and ③ will be available for ship.
The area among lines ③ and ④ will be service for laden ship, and the area between ② and ④ mainly for ballasted condition.
Overload running is available for limited period, 1 hour per 12 hours.

O.O. ---------- Overload Output
M.C.O. ---------- Maximum Continuous Output
C.S.O. ---------- Continuous Service Output

Crank angle (Piston T.D.C.)

~~5cyl. : 0 – 72 – 144 – 216 – 288~~
➡ 6cyl. : 0 – 60 – 120 – 180 – 240 – 300
~~7cyl. : 0 – 51.4 – 102.9 – 154.3 – 205.7 – 257.1 – 308.6~~
~~8cyl. : 0 – 45 – 90 – 135 – 180 – 225 – 270 – 315~~
~~9cyl. : 0 – 40 – 80 – 120 – 160 – 200 – 240 – 280 – 320~~

LOAD DIAGRAM (OUTPUT × SPEED)

6S50MC-C
(9070 kW × 125 min^{-1})
MITSUI TAMANO TS1774
TE2517

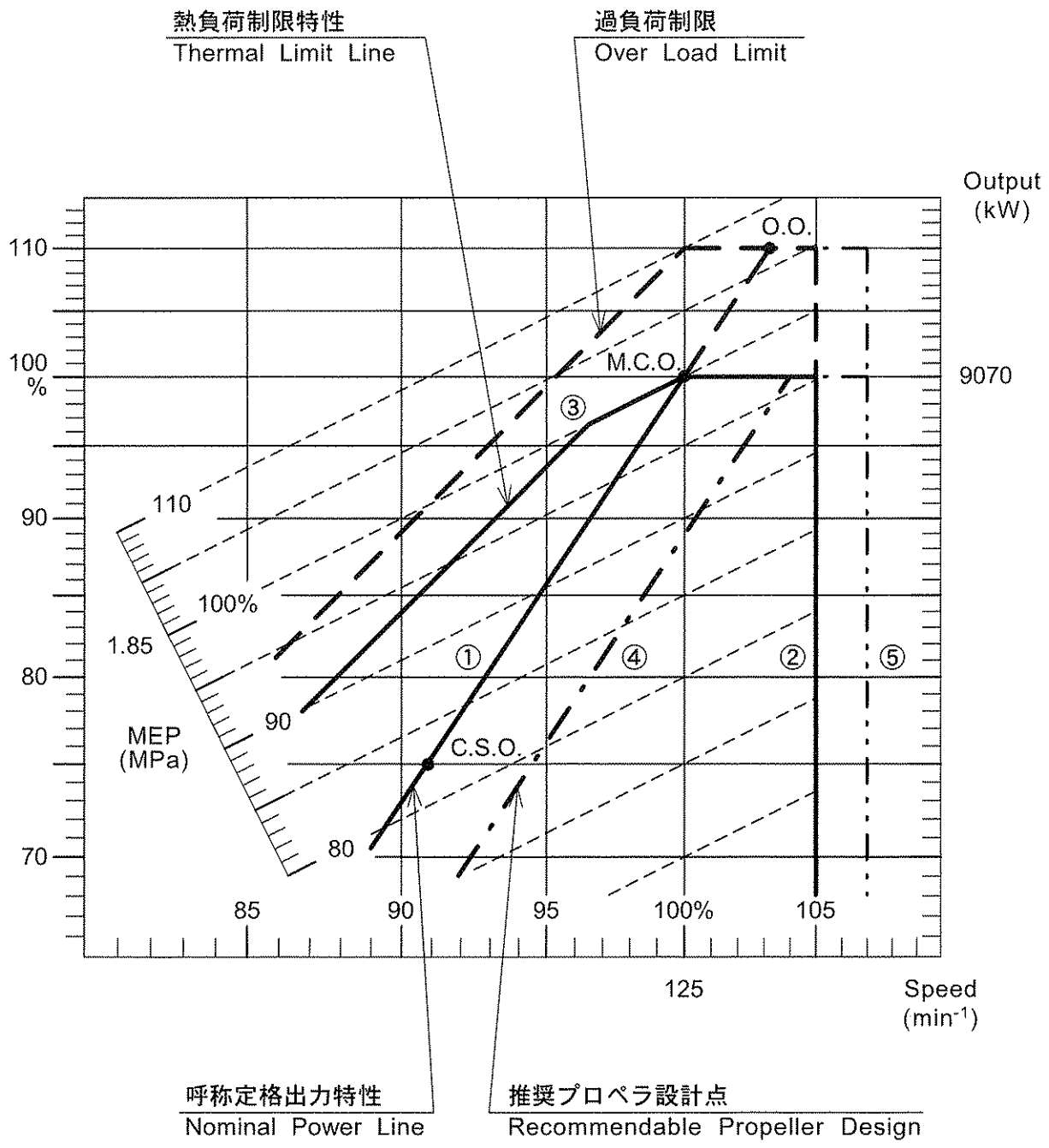

TURBO CHARGER

Type		Allowable Max. Rev.	Allowable Max. Gas Inlet Temp.
➡ TCA66-2	:	16000 min^{-1}	500 ℃

Turbo-charger Specification : MITSUI-MAN B&W TCA66-20025 A1C A4K339.8 M8 AD444

GOVERNOR

Maker	Type
MITSUI	MAG-200 II

TURNING GEAR

Type	Rating	Motor
NRT-1100	Continuous	1.5 kW

INTER COOLER

Maker	Type	Cooling area
DONG HWA	DHCA-0707YN2Y2(LKM-(Y)YN)	707.4 m^2

AUXILIARY BLOWER

BLOWER

Maker : NISHISHIBA

Capacity : 1.931 / 3.218 m^3/s

Pressure : 5600 / 3200 Pa (at 20℃, 0.1 MPa abs.)

MOTOR

Rating : Continuous Rating

Output : 37 kW (Normal Rating)

* When the change over switch is in "Automatic" position auxiliary blowers are operated automatically by pressure switches for scavenging air pressure.

Auto stop : approx. 0.07 MPa

Auto start : approx. 0.05 MPa

STANDARD BEARING CLEARANCE TABLE

ITEM		STANDARD CLEARANCE	REMARKS
Main Bearing	Fore / After-bearings	0.32 - 0.64	Cf. Fig.-1
	Other bearings	0.32 - 0.58	
Crank Pin Bearing		0.25 - 0.50	
Crosshead Pin Bearing		0.15 - 0.50	
Crosshead Guide Shoe A + B		0.20 - 0.50	Cf. Fig.-3
Crosshead Guide Piece C1 + C2 + D1 + D2 *)		1.00 - 1.80	Cf. Fig.-3
Thrust Bearing X + Y		0.50 - 1.00	Cf. Fig.-2

*) If piston is in center of cylinder liner, each (C1+C2) and (D1+D2) is 0.50 - 0.90 individually.

Measuring Tool

TOOL No. 13A71

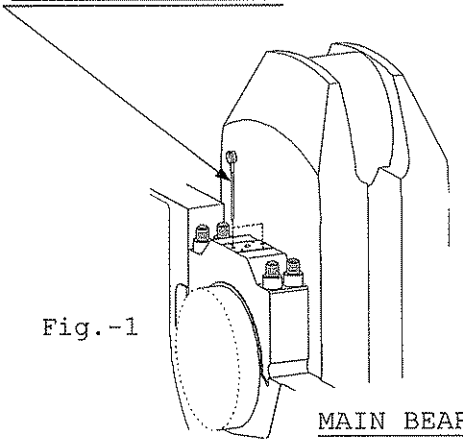

Fig.-1 MAIN BEARING

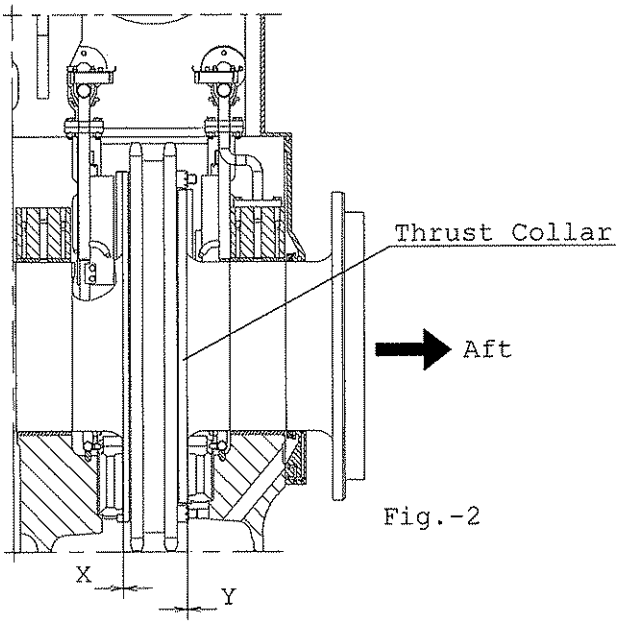

Fig.-2 THRUST / CHAIN CASING

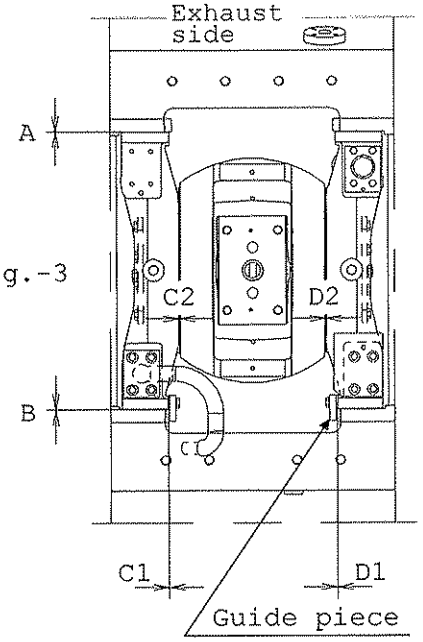

Fig.-3

GENERAL VIEW OF EXHAUST VALVE

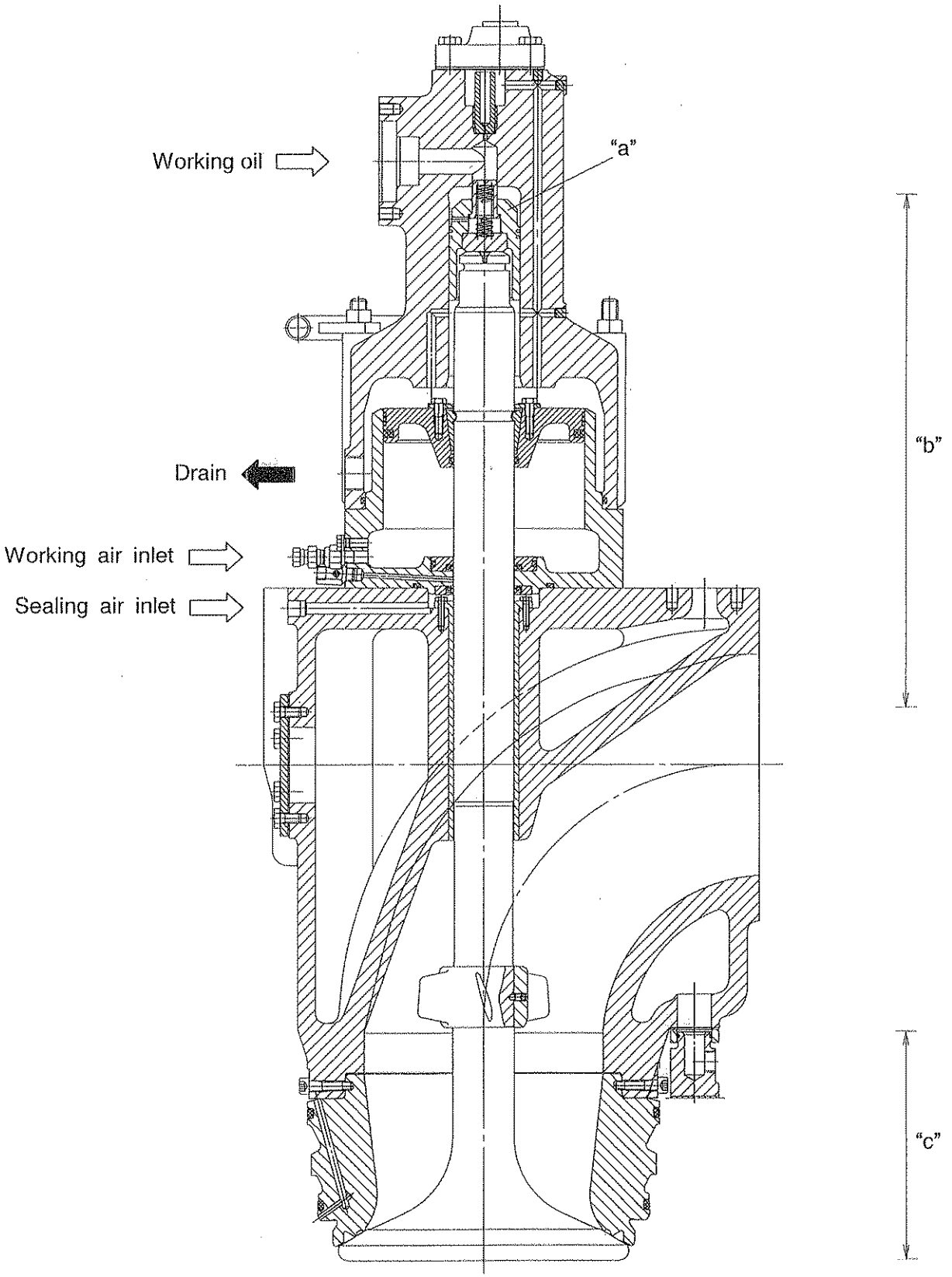

DRIVING PISTON (P-4-1 "a")

Piston

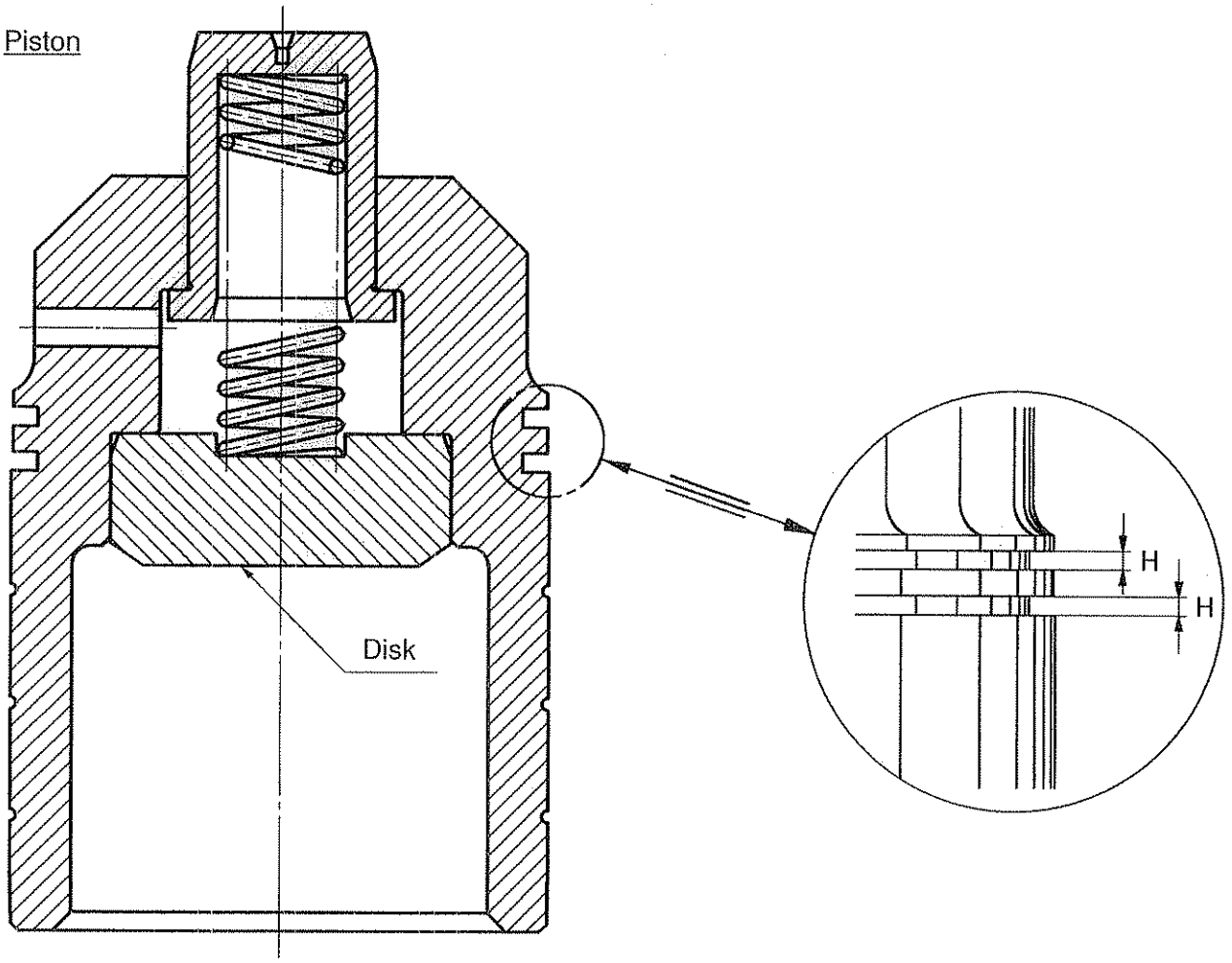

Piston Ring

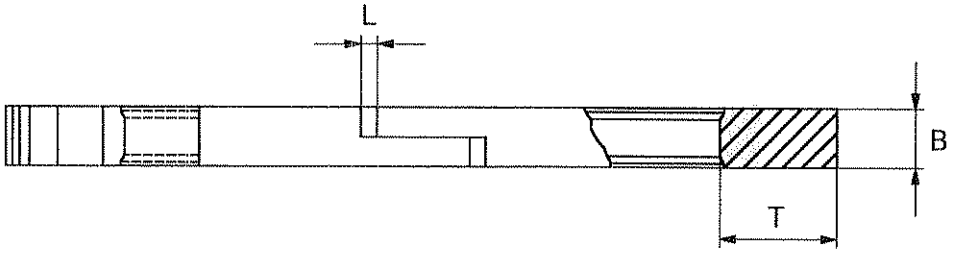

(Unit : mm)

	SYMBOL	STANDARD
Free gap	L	11 ±1.5
Breadth	B	2.5 $^{-0.01}_{-0.03}$
Thickness	T	3.1 ±0.10
Groove	H	2.5 $^{+0.05}_{+0.02}$

Note

Piston ring groove & piston ring of valve gear are the same as exhaust valve side.

AIR PISTON, VALVE SPINDLE & BUSH (P-4-1 "b")

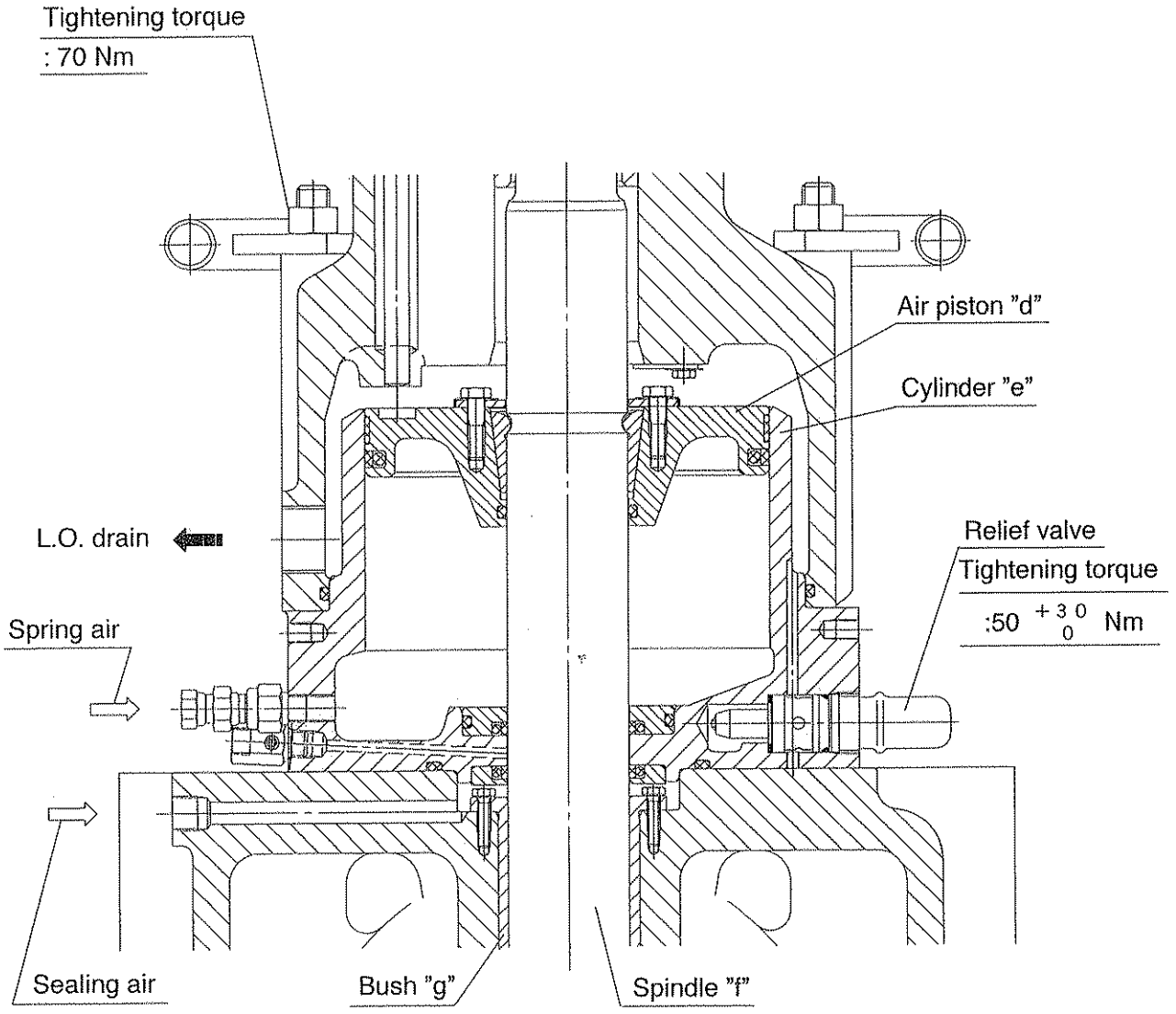

(Unit:mm)

PART	SYMBOL		POSITION	STANDARD
Air piston	Piston	d	Out. dia.	$\phi 200^{-0.600}_{-0.800}$
	Cylinder	e	In. dia.	$\phi 200^{+0.115}_{0}$
Spindle & Bush	Spindle	f	Out. dia.	$\phi 60^{-0.030}_{-0.076}$
	Bush	g	In. dia.	$\phi 60^{+0.260}_{+0.230}$

VALVE SPINDLE & VALVE SEAT (P-4-1 "c")

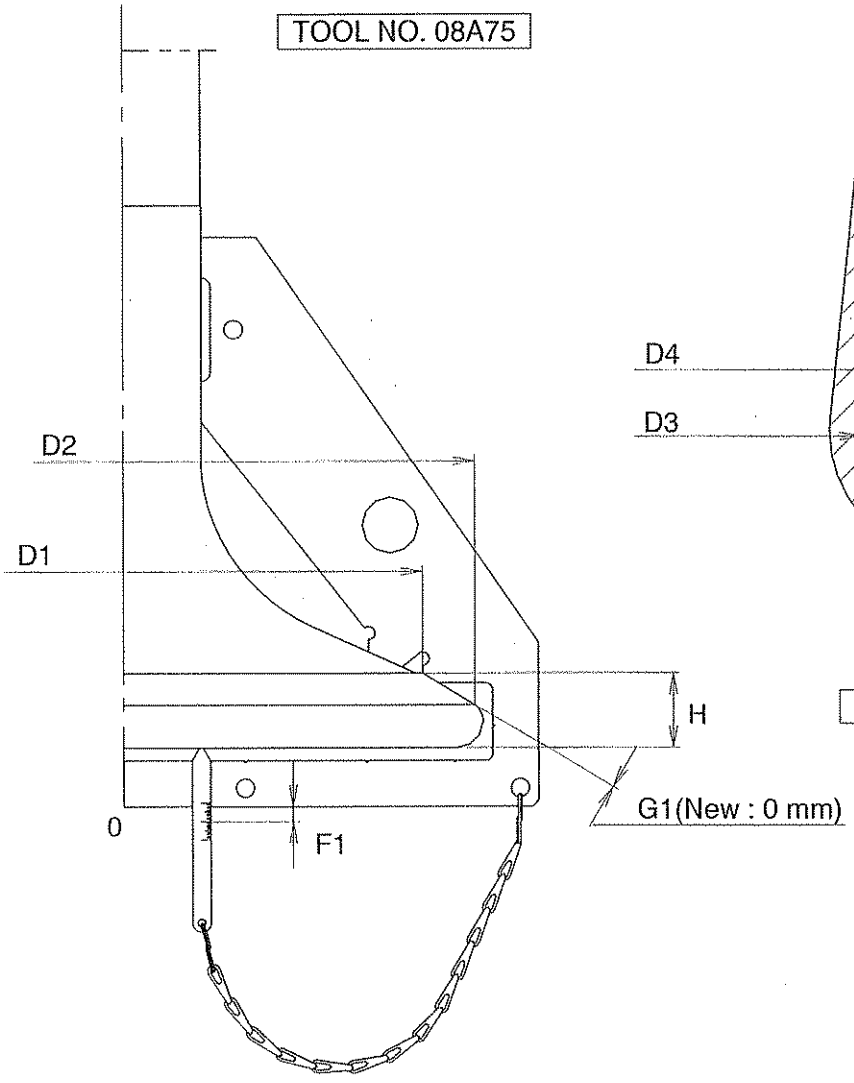

VALVE SPINDLE

(Unit : mm)

Valve Spindle				Valve Seat				Remarks
New	Max. Grind			To be kept	Max. Grind			Max. Burn away
H	G1	D1	D2	G3	G2	D3	D4	F1
31	2	232.5	285.5	1	0	235	255.5	8

WORKING AIR LINE OF EXHAUST VALVE

1. 0.7 MPa air which is branched from engine control air source is supplied as a working air of exhaust valve.

2. When the operating exhaust valve, supplied 0.7 MPa control air will be pressed up approx. 2.1 MPa at exhaust valve opening condition.

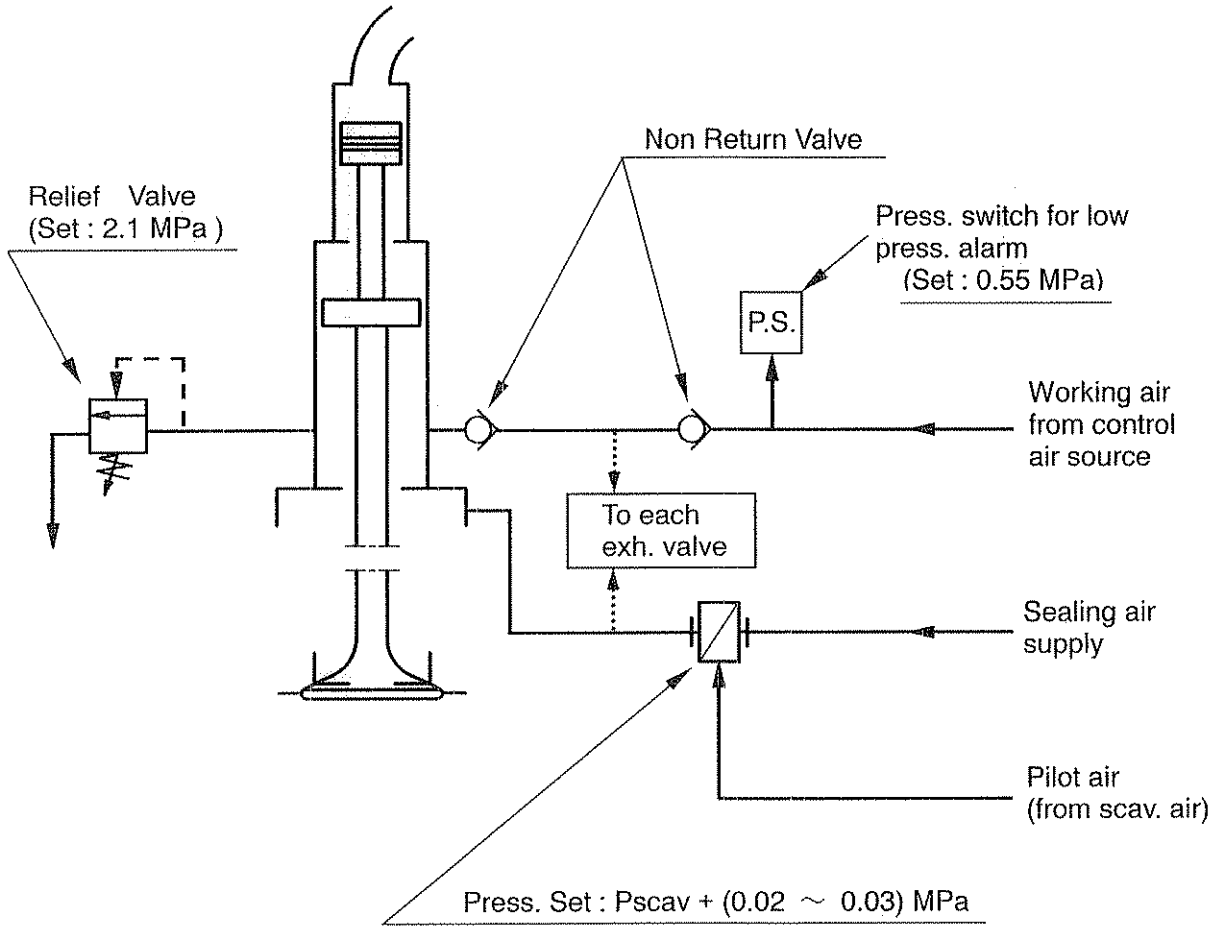

SEALING AIR DEVIICE OF SPINDLE

Sealing air pressure is controlled ab. Scavenge air pressure + (0.02 ~ 0.03) MPa by the pilot valve.

Adjustment of driving piston height

Height "L" is important as to controlling mesh amount with hydraulic cylinder to avoid knocking when seating spindle.

When the seats are ground readjustment of the height "L" is necessary depending on the amount of grinding.

So, the height "L" is to be checked every time the valve is overhauled by means of tool and adjustment is made by disk.

Adjustment target	: L = 50 mm
Allowable in service	: L = 47.0 ～ 51.2 mm
Readjustment required	: L < 47.0 mm

Measurement procedure

Before mounting a hydraulic cylinder, lift spindle by supplying spring air and stand a measurement tool on air cylinder.

And measure the length "L" by means of calipers.

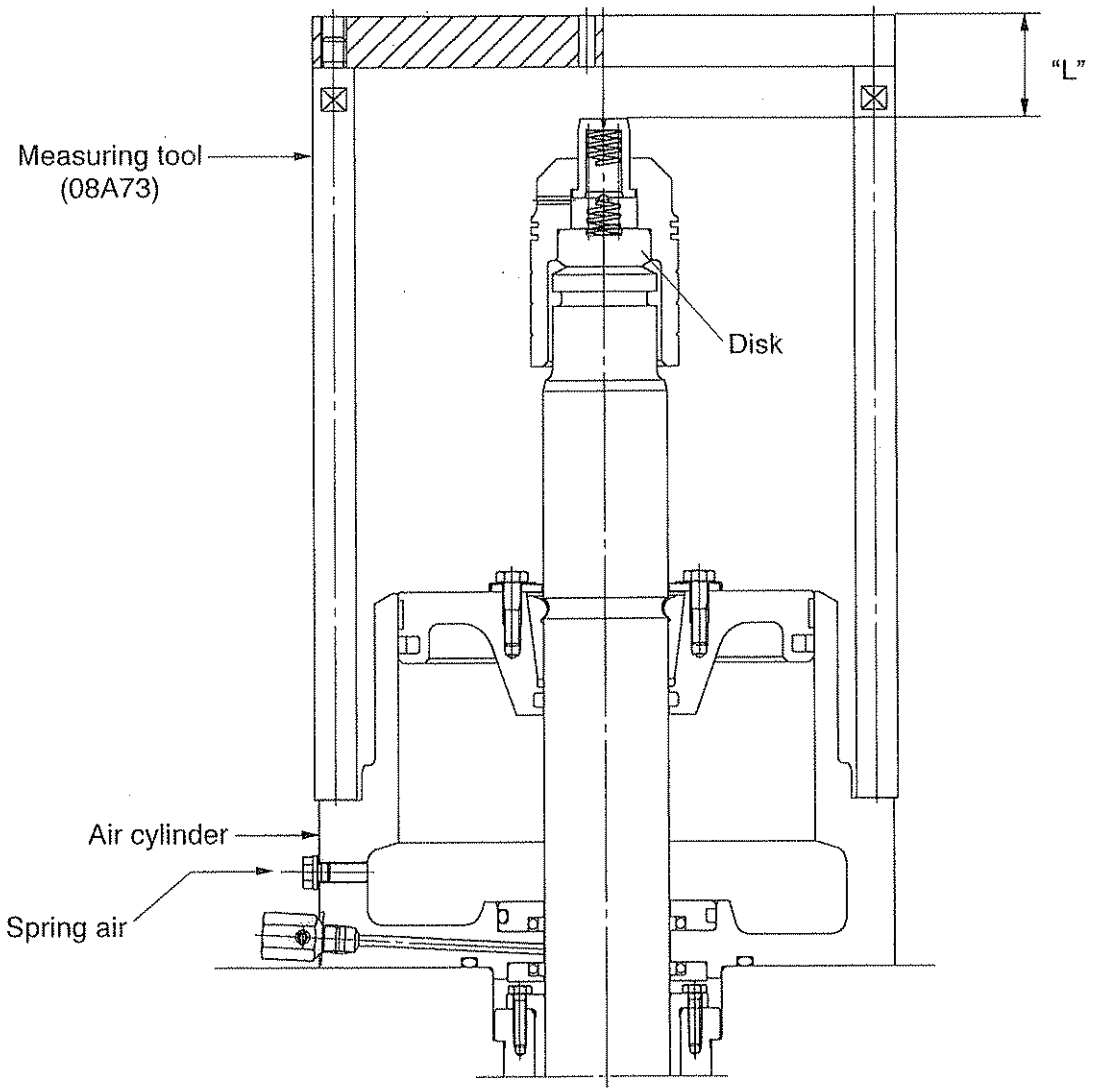

OPENING PRESS. & VALVE LIFT

Valve Opening Press. : 35.0 ± 3.0 MPa

Notes

1. Valve Lift : L1 = 2.0 mm
   L2 = 3.2 mm (Auto Dearation Valve)

2. Closing Press. Of Non – return valve
   : ab. 1.5 MPa

Atomizer

Type : S50MC-C12

Dia. Of holes : 1.05 mm

Number of holes : 5

Drawing No. : 3E-66101

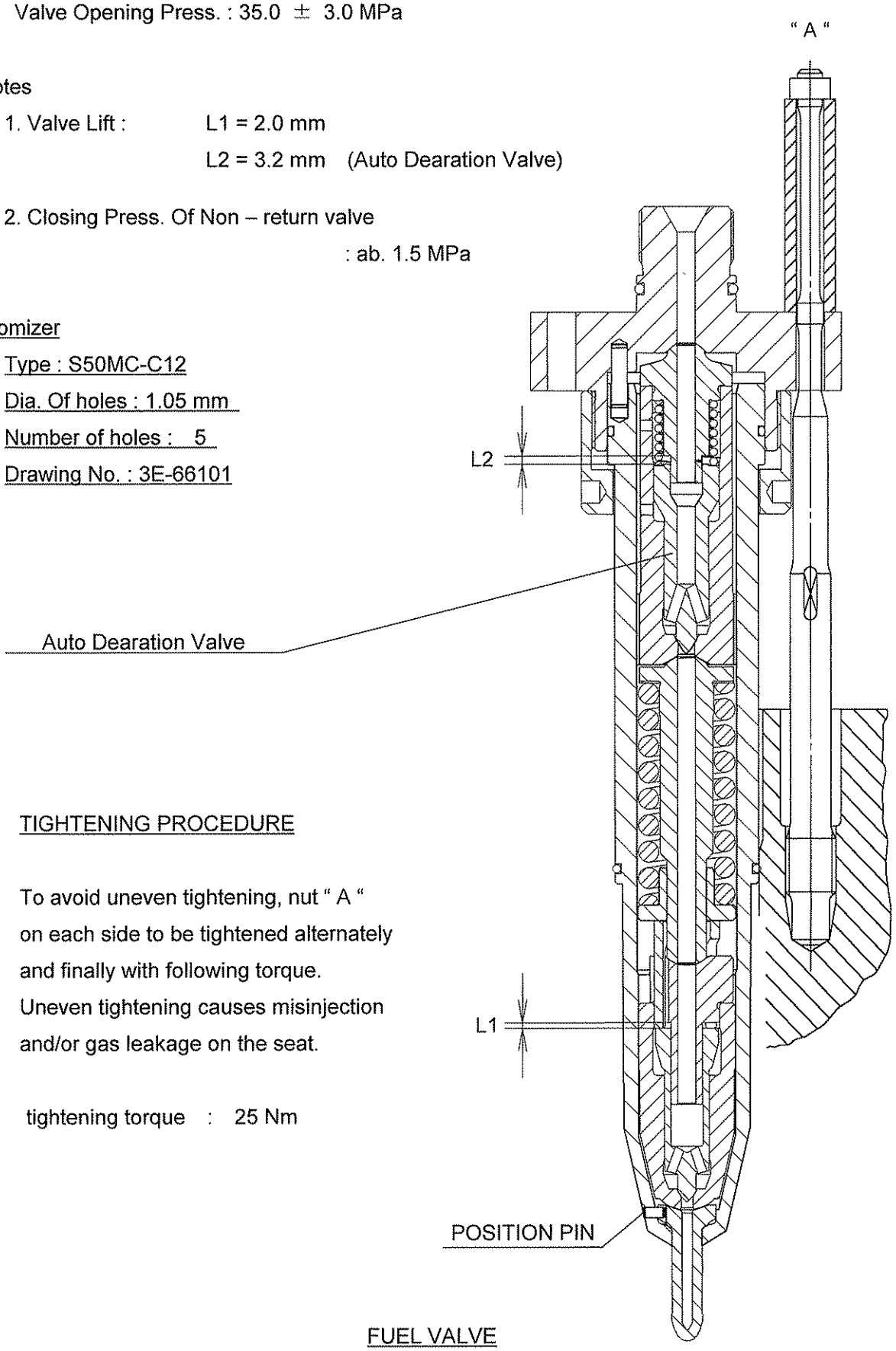

FUEL VALVE

TIGHTENING PROCEDURE

To avoid uneven tightening, nut " A "
on each side to be tightened alternately
and finally with following torque.
Uneven tightening causes misinjection
and/or gas leakage on the seat.

tightening torque : 25 Nm

FUEL VALVE TEST DEVICE

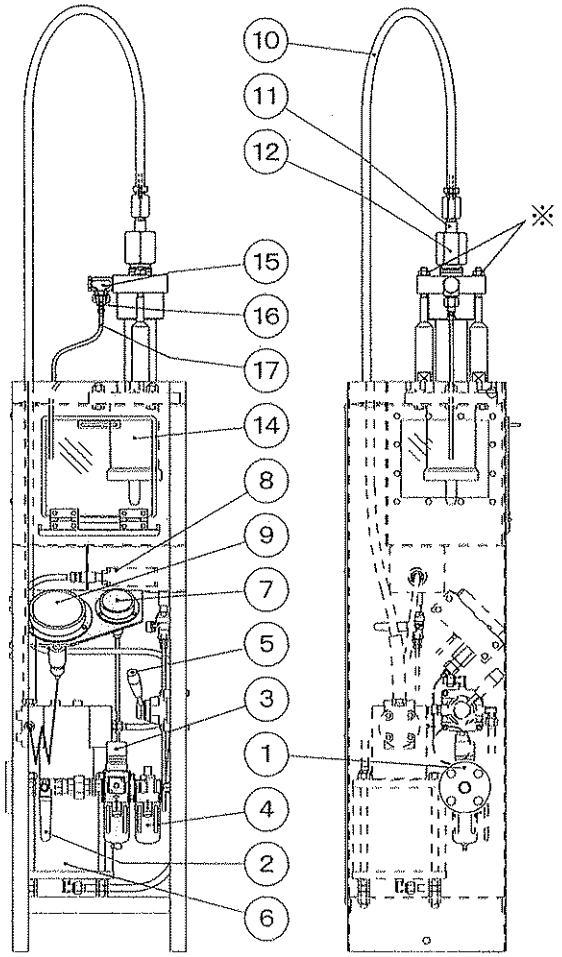

No.	PARTS
1.	Air supply connection part
2.	Stop valve
3.	Regulator
4.	Lubricator
5.	Change valve
6.	Booster pump
7.	Air pressure gauge
8.	Oil filter
9.	Fuel oil pressure gauge
10.	High pressure hose
11.	Connection part
12.	Threaded cap
14.	Holder
15.	Stud elbow
16.	Drain plug
17.	Drain tube

A. Preparation of test

(1) Fill the oil tank with purified hydraulic oil (including rust-preventing component, viscosity 7 –10 cst at 50℃).

(2) Check the oil amount of the Lubricator (4) . (Turbine oil No.1)

(3) Open the stop valve (2) . The handle of the regulator (3) is turned anti-clockwise until air pressure indicated on the air pressure gauge (7) is reduced to 0 MPa.

(4) Air venting in oil injection system.

4-1) The end of the high pressure hose (10) is to be inserted into the holder (14) and fixed.

4-2) Set the air pressure at approx. 0.05 MPa by turning the handle of regulator (3) clockwise.

4-3) Feed the oil to the system by operating the lever of change valve (5) . This operation must be repeated until the no foamy oil flows out completely.

Note : It is necessary keep the lever of change valve (5) operation until you detect the stroke end of booster pump (6) .

(5) Fit fuel valve and tightened the high press. hose (10) .

※ Tightening torque of the nuts for the studs : 25Nm

B. Operating of fuel valve auto deaeration valve.

(1) Set the air pressure at approx. 0.05 MPa, by turning the handle of regulator (3) clockwise.

(2) Operate the lever of change valve (5) by pushing/pulling repeatedly until the oil flow from oil return hole on fuel valve.

NOTE : Operate the lever of change valve (5) confirm the piston of booster pump reached stroke end.

C. Checking of valve spindle tightness and sliding function.
For the purpose of confirmation of the tightness of the valve spindle against the seat in the spindle guide, check the oil leakage from the nozzle of the atomizer.
If required, the slide valve unit should be replaced.

(1) Set the air pressure to 0.1 MPa by the regulator (3) . Operate the lever of change valve (5) and confirm that there is no fuel oil leakage from each joint of fuel oil line.

(2) Set the air pressure by turning the handle of the regulator (3) clockwise becomes approx.8.0～10.0 MPa below the fuel valve opening pressure.

Fuel valve opening pressure		Test pressure
35±3 MPa	⟶	25～27 MPa

(3) Operate the lever of change valve (5) and confirm that there is no fuel oil leakage from nozzle hole.

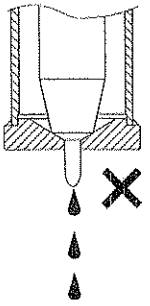

(4) The pressure drops relatively slowly to about 1～1.5 MPa, after which drops quickly to 0 MPa (the slide is pressed against conical seat and opens for circulation oil).

D. Checking of valve opening pressure.
Set the air pressure by 0.6 MPa by regulator (3) .
Increase the fuel oil pressure by pulling the lever of change valve (5) slowly until the oil can be observed through the nozzle hole and read the pressure by pressure gauge (9) as opening pressure. If this pressure has not been obtained the normal value, the spring or valve unit must be replaced with new one.

Fuel valve opening pressure	35±3 MPa

Note: If the desired pressure is not able to reach and pressure is shown drops, the repeat operation of lever of change valve is necessary.

E. Pressure test O-ring seals.

(1) If the drain oil flows out from the drain hole of fuel valve head by the fore going test, the fuel valve is full of oil. Close the drain hole with a drain plug (16) under this condition.
If the no drain oil flows out from the drain hole, build up the hydraulic oil pressure of about max. 1 MPa by setting of the regulator (3), and operate the lever of change valve (5) until the drain oil flows out from the drain hole.

(2) After confirming that, close the drain hole with a drain plug (16).

(3) Operate the lever of change valve (5) continuously, increase the hydraulic oil pressure to less than 10 MPa by adjusting of the regulator (3).
While opelating the lever, observe the pressure gauge (9) of hydraulic oil and the oil leakage from the O-ring part. Do not increase the oil press. more than 10 MPa when plugged in the drain hole, because the stud must destroy.

(4) After completion of confirming the oil leakage, set the regulator (3) to 0 MPa, and reduce the oil pressure by slight loosening of the drain plug (16). After that, remove the drain plug (16) and fitting the drain tube (17).

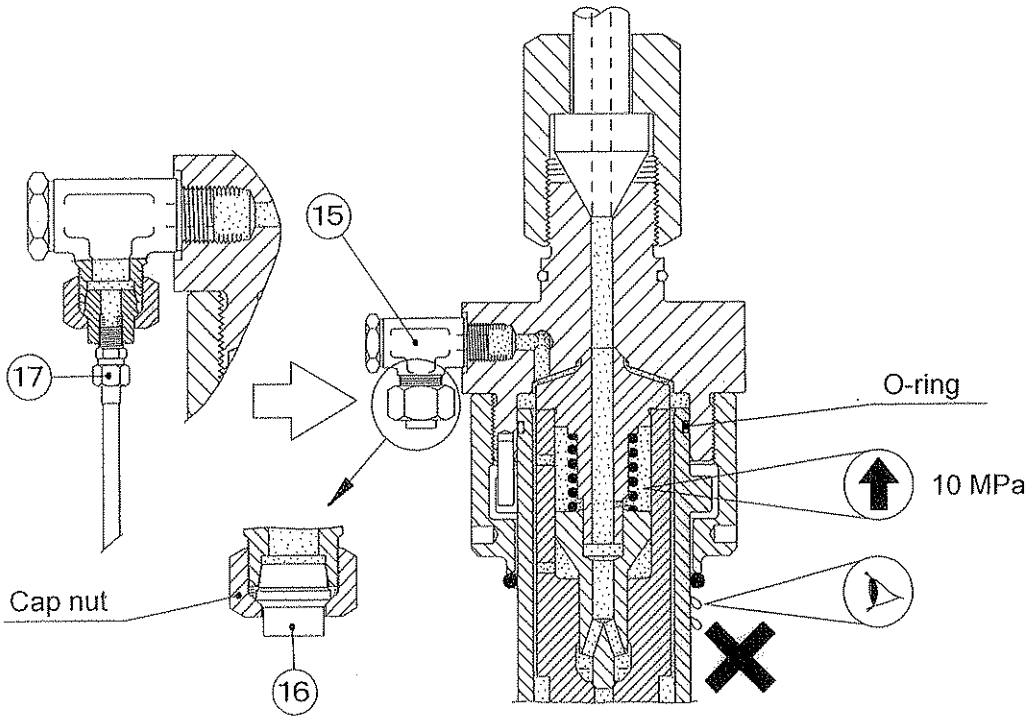

F. Dismantling of fuel valve.
For safety purposes, the dismantling work must not be commenced until close the stop valve (2) set the air pressure is 0 MPa by using the regulator (3), and check there is no remnant pressure.

PISTON CROWN, RING & RING GROOVE

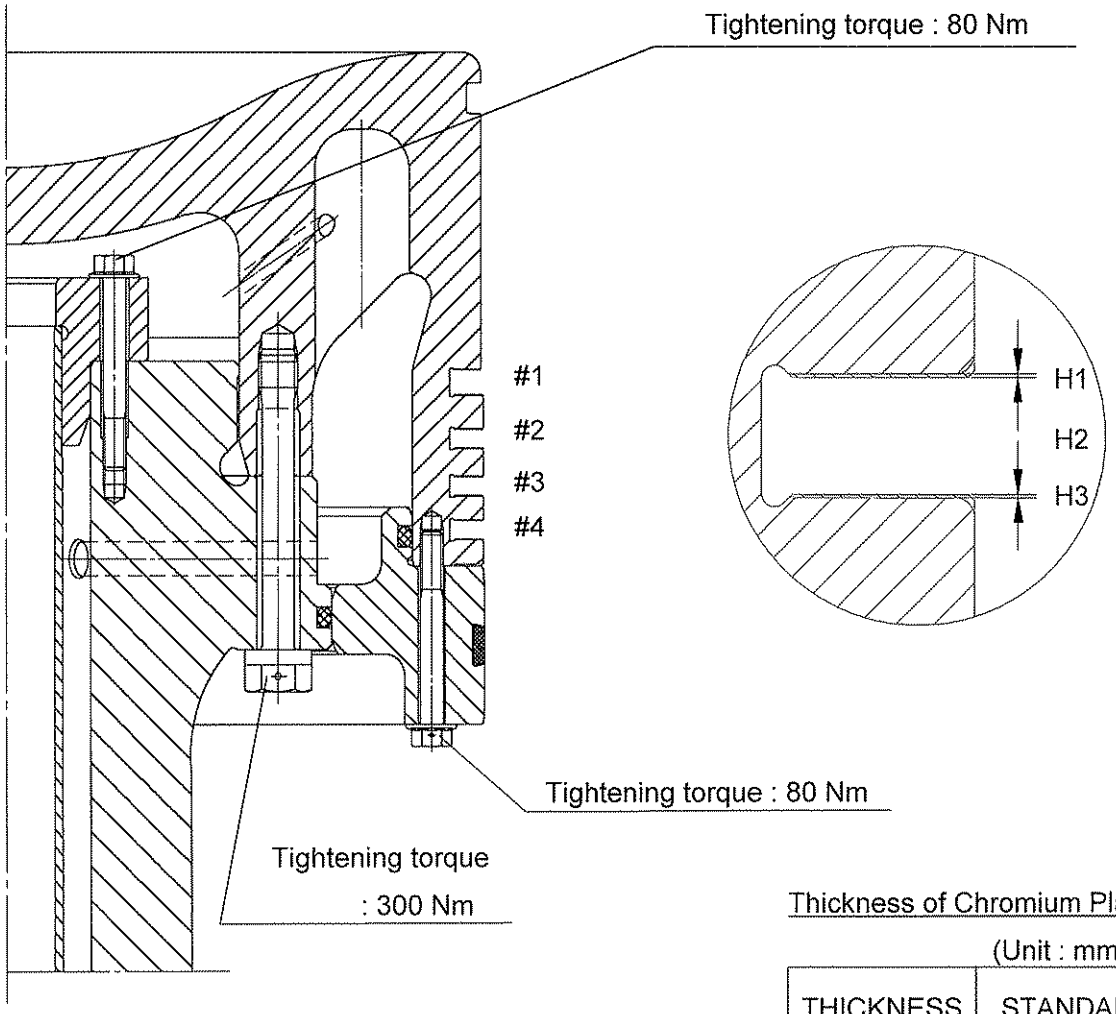

Thickness of Chromium Plate

(Unit : mm)

THICKNESS	STANDARD
H1 / H3	0.3

New or Reconditioned Ring Groove (Unit : mm)

NOMINAL HEIGHT OF RING & RING GROOVE			TOLERANCE	
	NEW		RING	GROOVE
H2	#1	12.5	-0.110 -0.135	+0.265 +0.240
	#2,#3,#4	9.5	-0.110 -0.135	+0.265 +0.240

PISTON CROWN, PISTON RING & RING GROOVE

1) Ring gap at fitting condition in cylinder liner. (New)

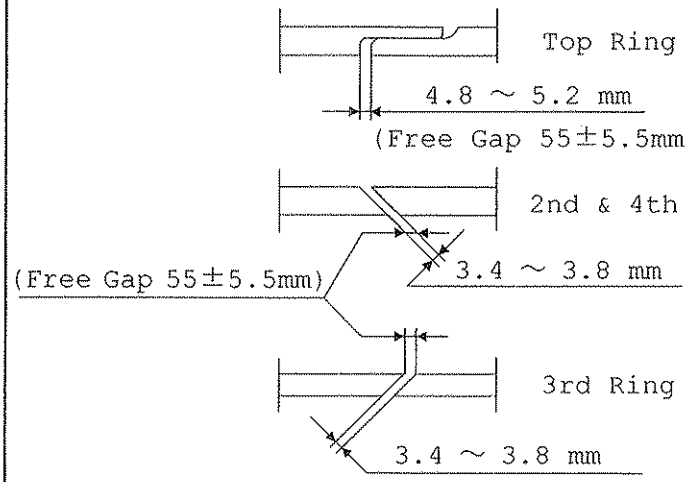

2) Vertical clearance between New Ring & New or re-established ring groove.

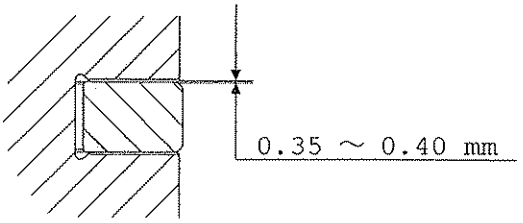

3) Worn Piston Ring to be renewed if radial width or depth of CL groove is less than below.

Radial Width

New

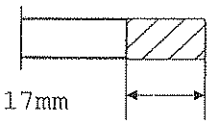

Worn limit

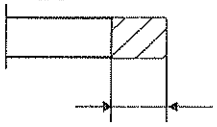

15.5mm(TOP:CPR)

14.0mm(2nd-4th:Oblique)

Depth of CL Groove

3.0mm (New)

1.5mm (Worn limit)

(TOP:CPR)

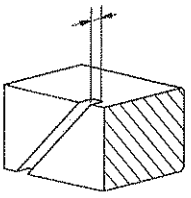

4) Check Groove with New Piston Ring and Feeler Gauge and the Groove to be Re-established if the clearance becomes more than 0.65 mm due to Groove Wear Down.

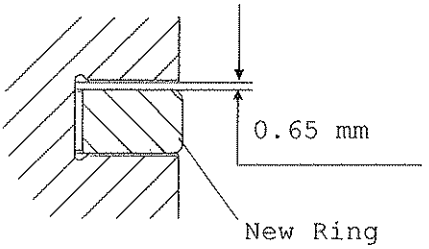

5) Max. Burn away of Piston Crown.

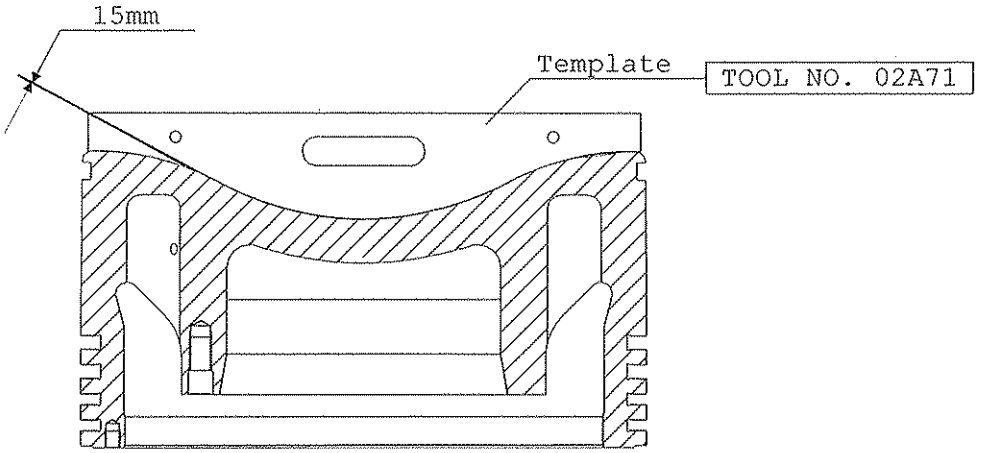

EXHAUST VALVE

1) Tightening torque :
   To be tighten in 3 stages
   1st :20Nm, 2nd :36Nm
   (To be cross-tightened)
   last :36Nm
   (To be tightened all
   by clockwise)

   TOOL NO. 13A86,13A91

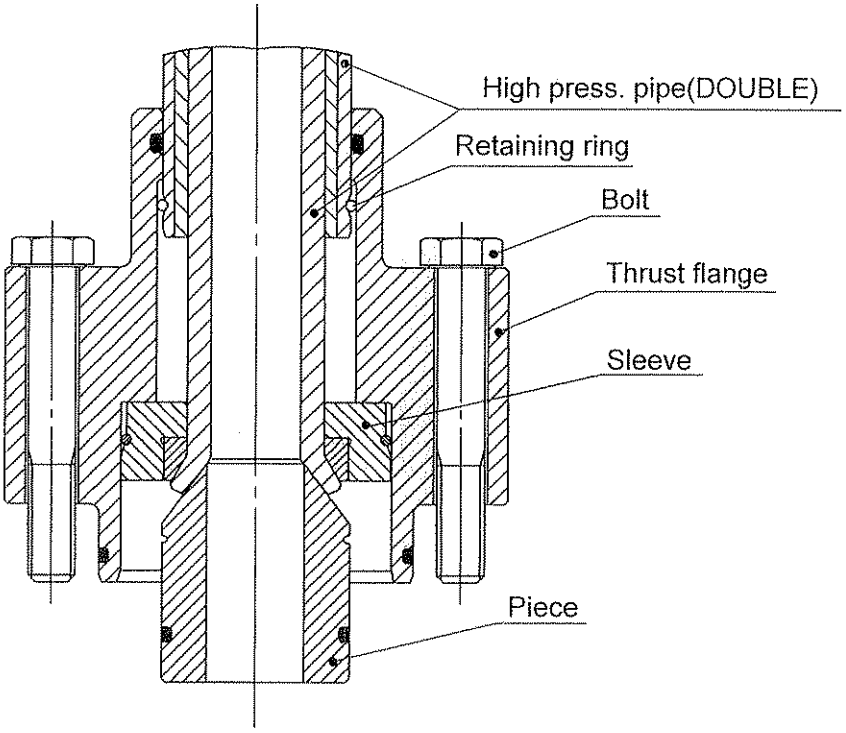

FUEL VALVE

Two kinds of connection are used for high pressure pipe.

1) Screw in the thrust piece "A" and adjust the length "H" & "L". TOOL NO. 09D85
2) Apply the anti-seizuring paint on the screw of screw cap "B"
   and tighten it. TOOL NO. 09D83,13A91
   Tightening torque : 100 Nm
3) Tighten protection cap "C" by spanner. TOOL NO. 09D81

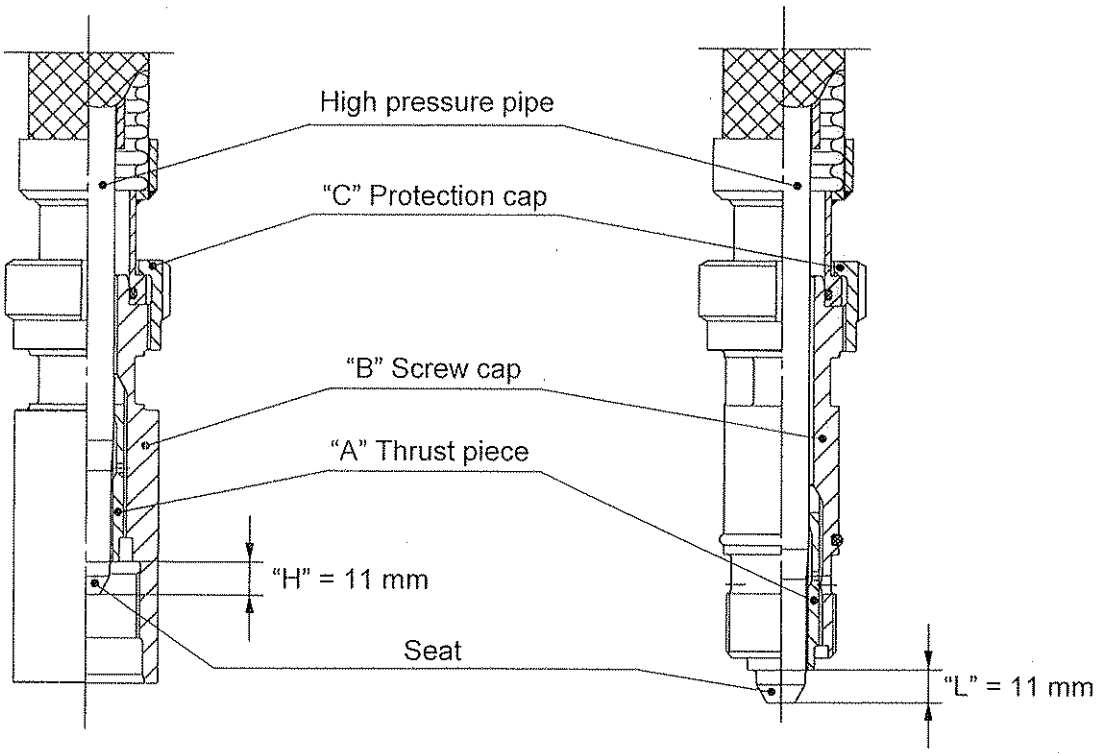

STUFFING BOX

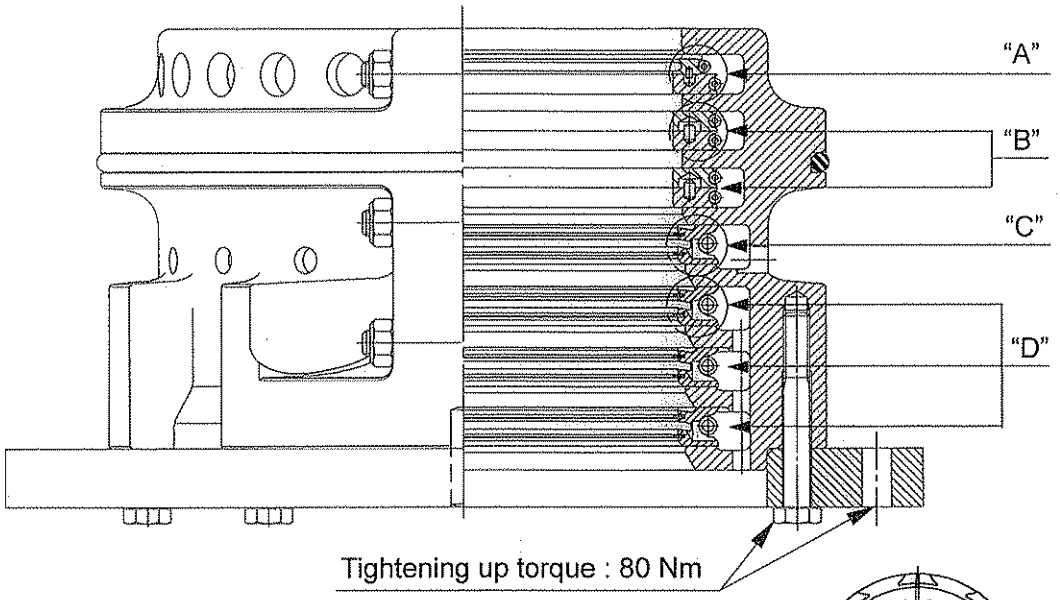

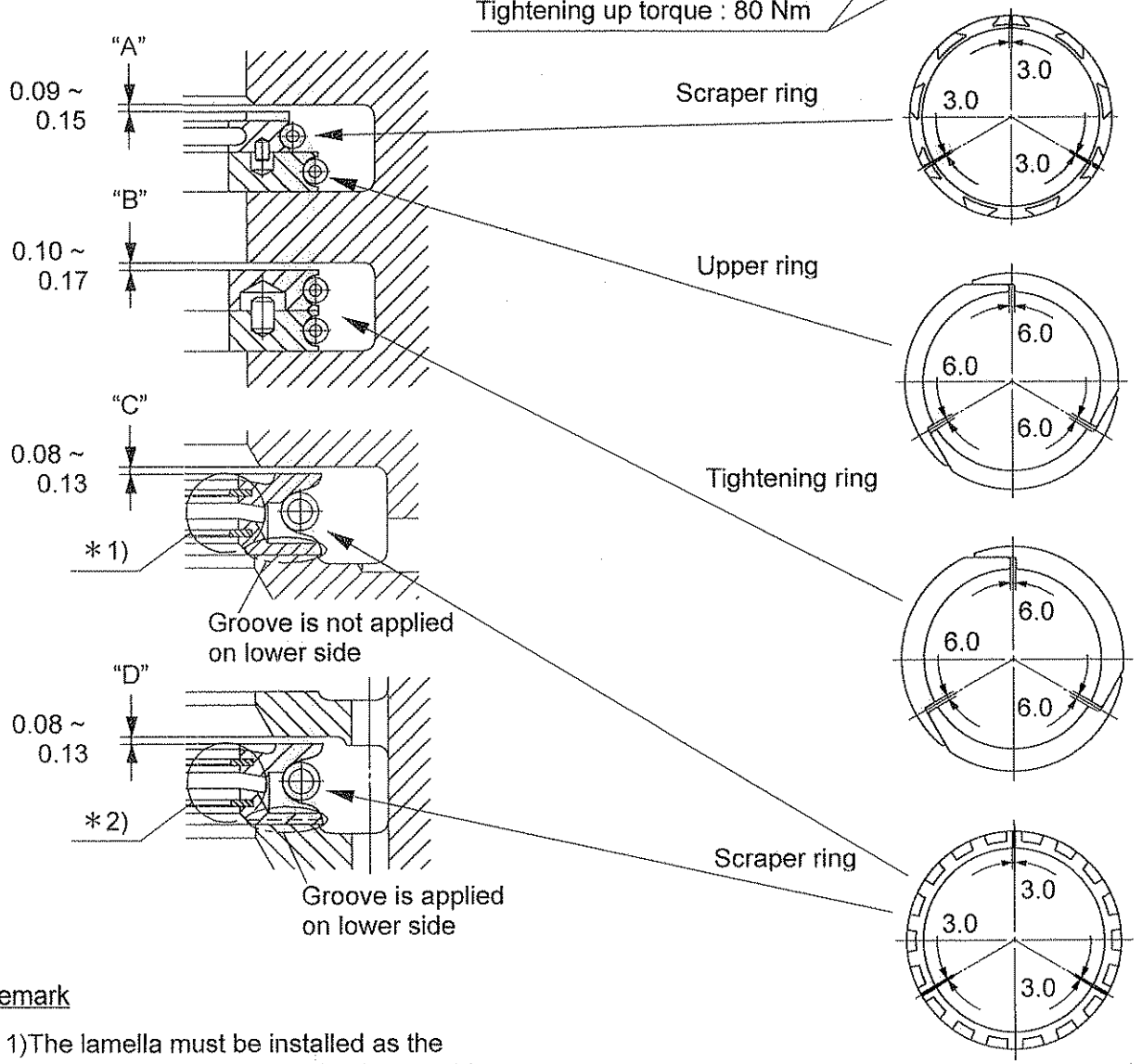

Remark

*1)The lamella must be installed as the chamfered edge is turned to Lower side.

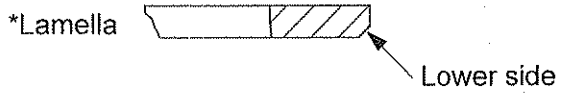

*2)The lamella must be installed as the chamfered edge is turned to upside.

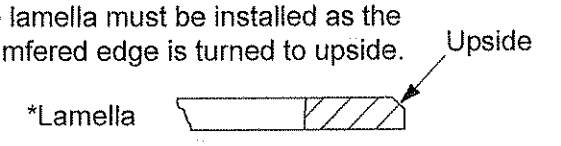

MEASURING POSITION OF CYLINDER LINER

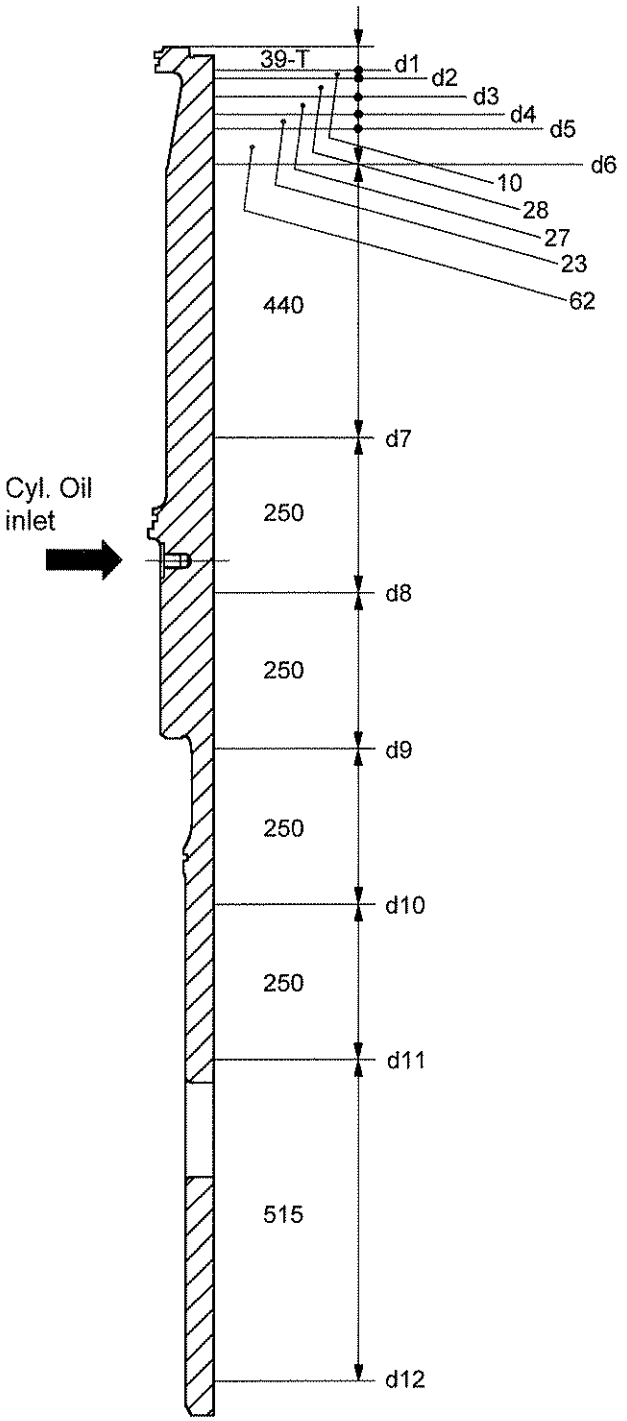

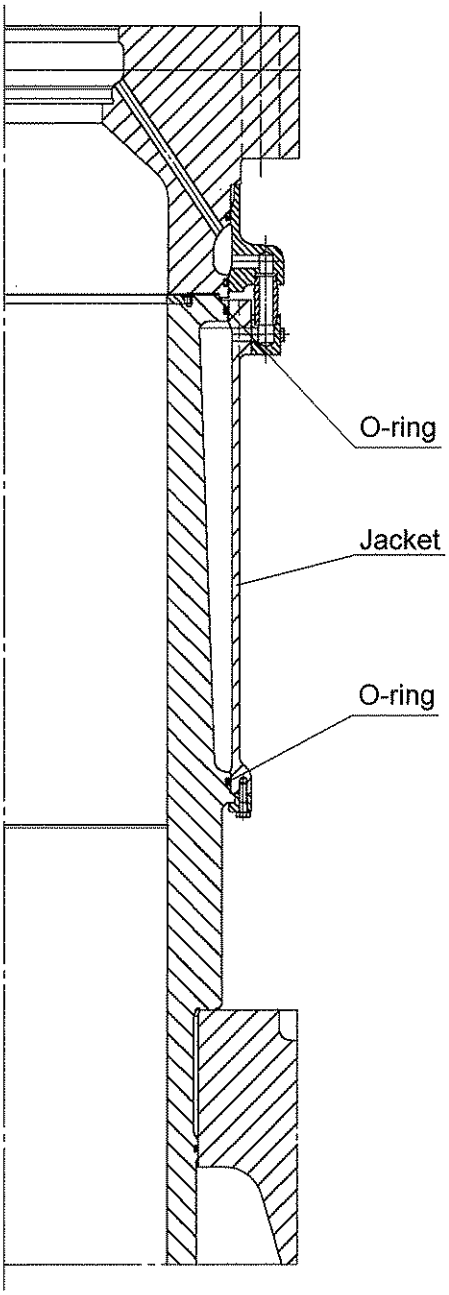

O-RING DIMENSION

(Unit : mm)

LINE DIA.	INSIDE DIA.
8.4 ± 0.2	665 ± 4

"T" : Thickness of piston rod shim (17) mm

d1 – d12 : Measuring points of cylinder liner. TOOL NO. 03A73

NOTE : Measuring results of inside diameter after machining is shown on DATA SHEET.
(Inspection results of main parts)

CHAIN & CHAIN WHEEL ARRANGEMENT

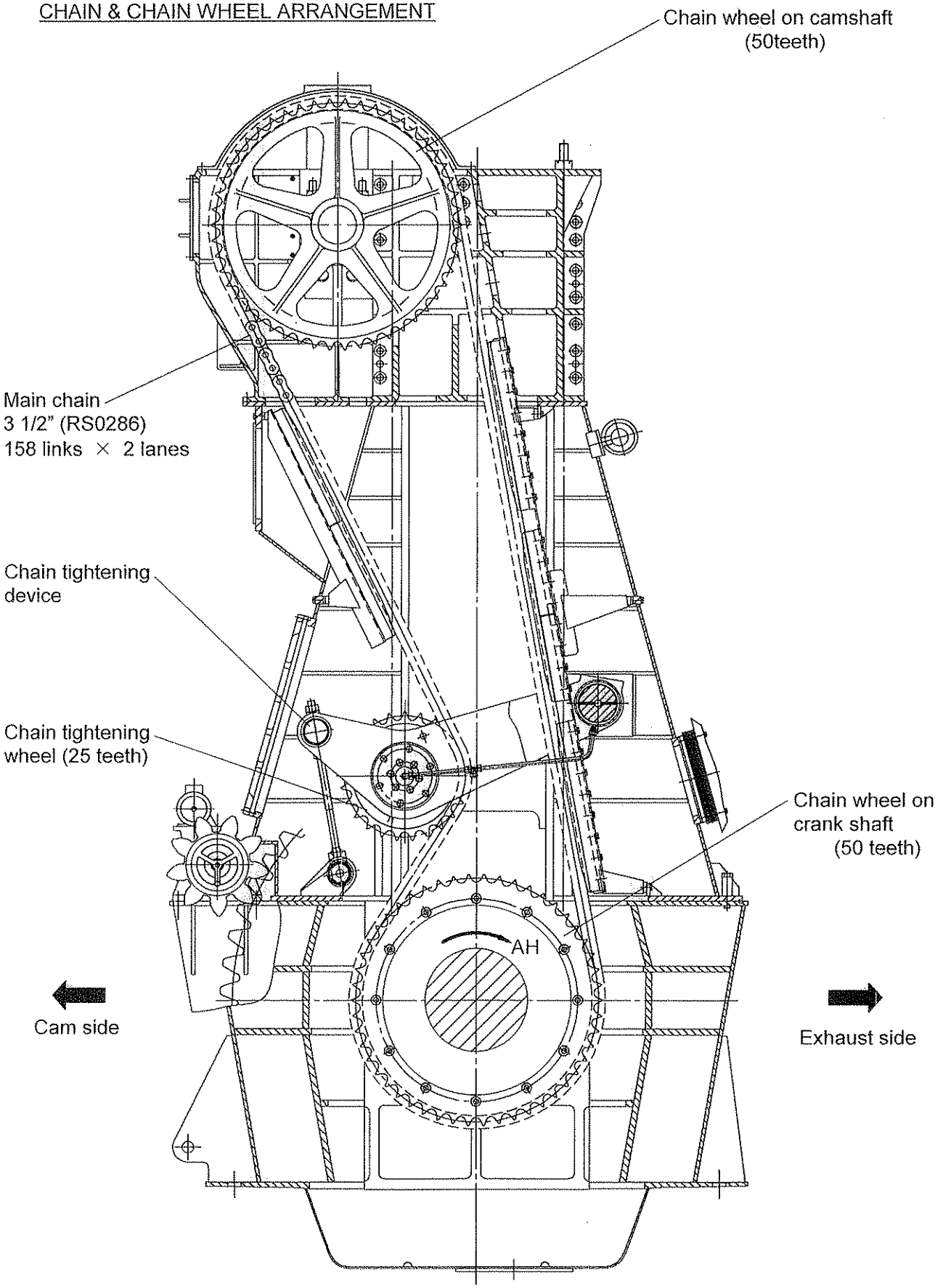

Seen from Aft side

TIGHTENING METHOD OF MAIN CHAIN

1. The nuts A and B are to be loosened.
2. The engine is to be turned in AHEAD direction (1-2) turns of crank shaft and stop the turning at the crank angle (30 °).
3. The nut A2 is to be screwed down towards the shaft until there is 0.1 mm clearance between shaft and nut.
   Then the nut A2 is to be tightened further 7 hexagons (420 °).
4. The nut B1 is to be tightened hard against the contact face of the shaft. Nut B2 is to be tightened and both nuts B secured with locking plate S2.

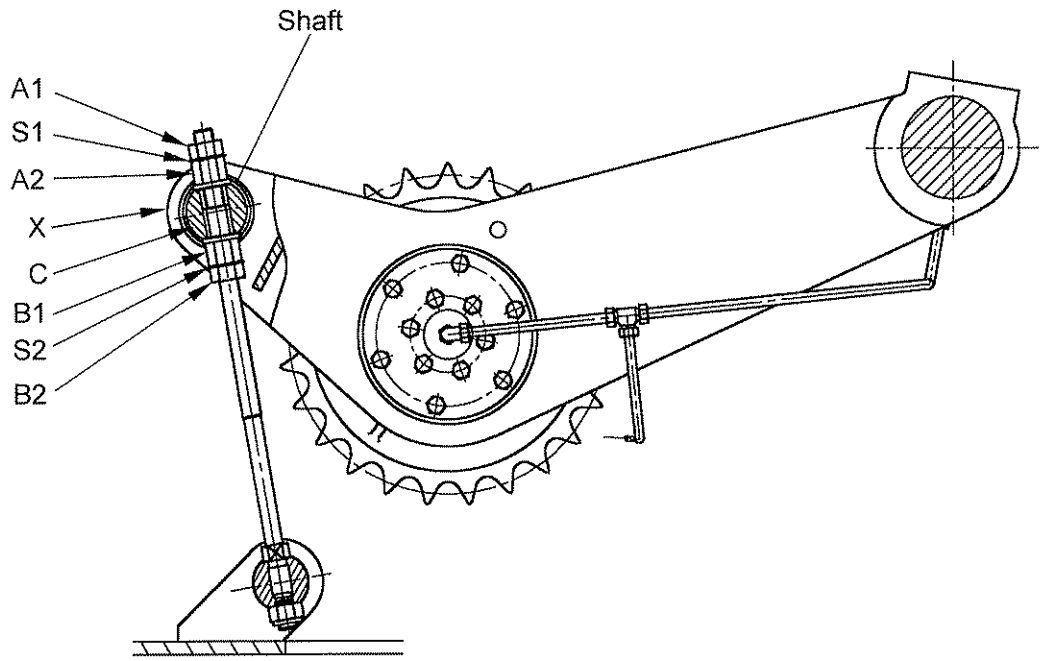

5. The upper nut A1 is to be tightened and both nuts A secured with locking plate S1.

MITSUI – MAN B&W TURBO CHARGER (TYPE TCA66)

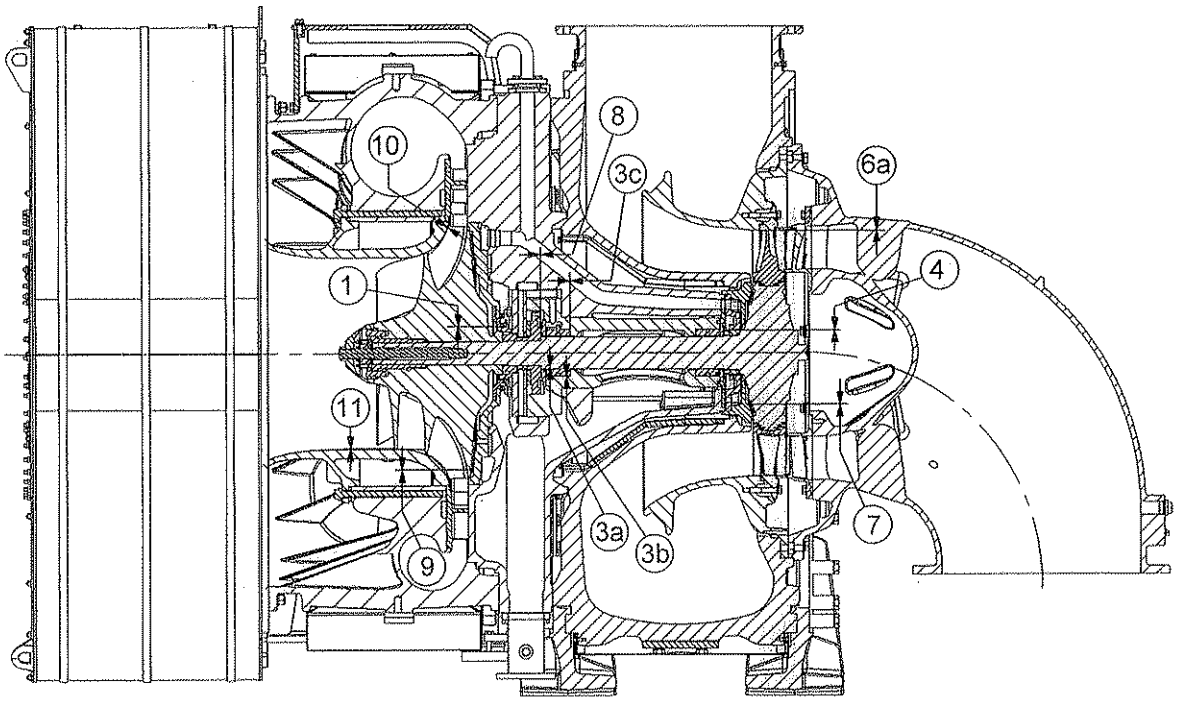

Radial

$$\text{Gap} = \frac{da - di}{2} \quad (mm)$$

Clearance = da − di

da : Outer diameter

di : Inner diameter

Clearance Table

Fig. No.	Designation	Design Value			
		Gap		Clearance	
		min.	max.	min.	max.
1	labyrinth ring / sealing cover	0.14	0.185	-----	-----
3a	bearing bush / turbine shaft	-----	-----	0.048	0.085
3b	bearing body / bearing bush	-----	-----	0.251	0.288
3c	bearing bush / bearing body	-----	-----	0.26	0.34
4	labyrinth ring / sealing cover	0.14	0.182	-----	-----
6a	turbine blade / shroud ring	0.85	1.055	-----	-----
7	turbine disc / end cover	0.80	0.90	-----	-----
8	thrust ring / count thrust bearing	-----	-----	0.27	0.38
9	compressor wheel / labyrinth disc	0.80	0.90	-----	-----
10	compressor wheel / insert piece	2.0	2.3		
11	compressor wheel / insert piece	1.15	1.25	-----	-----

REVERSING MECHANISM

The roller guide set position for the fuel cam from ahead to astern, and viceversa is changed by air cylinder.

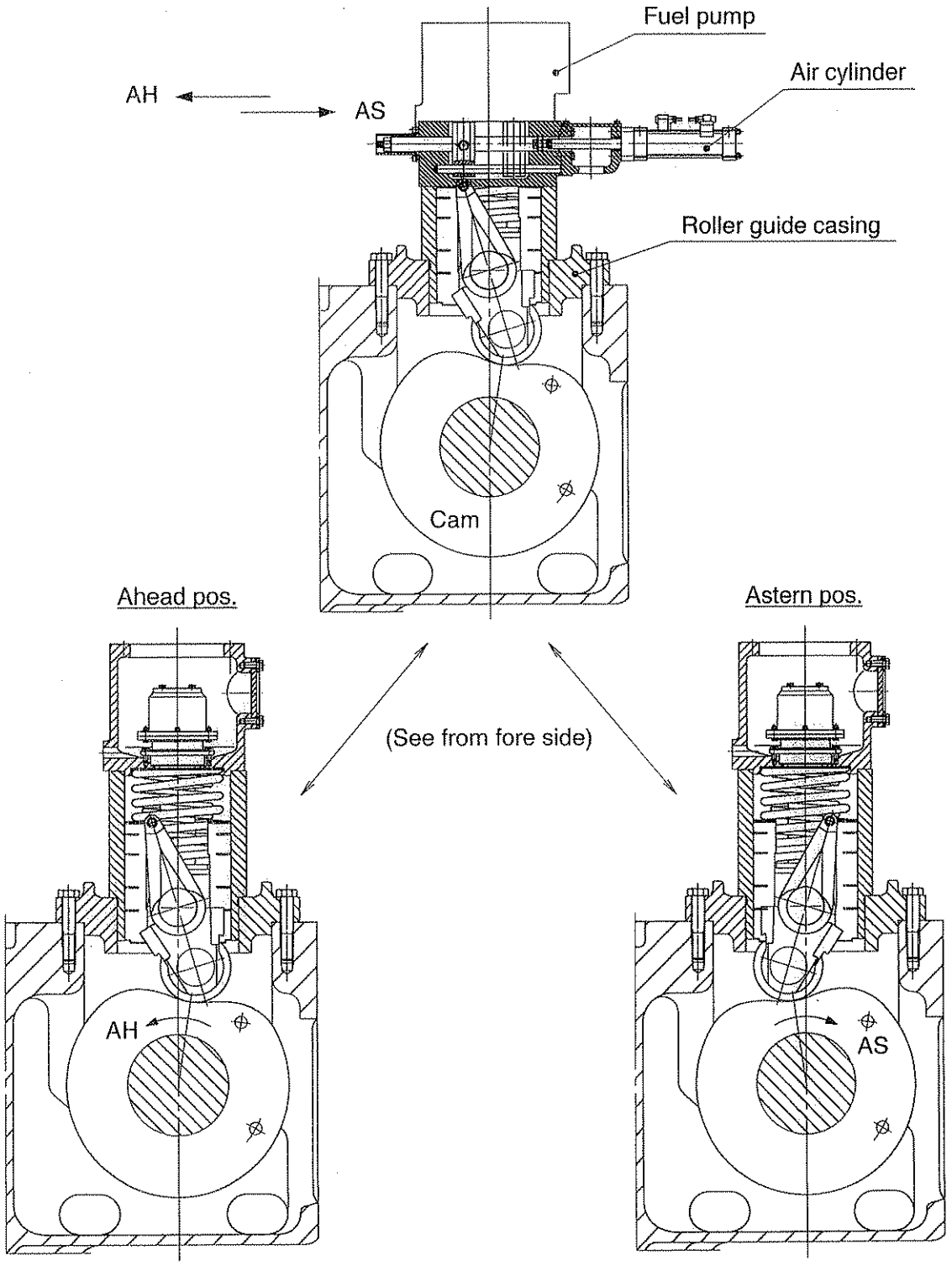

STARTING AIR DISTRIBUTOR

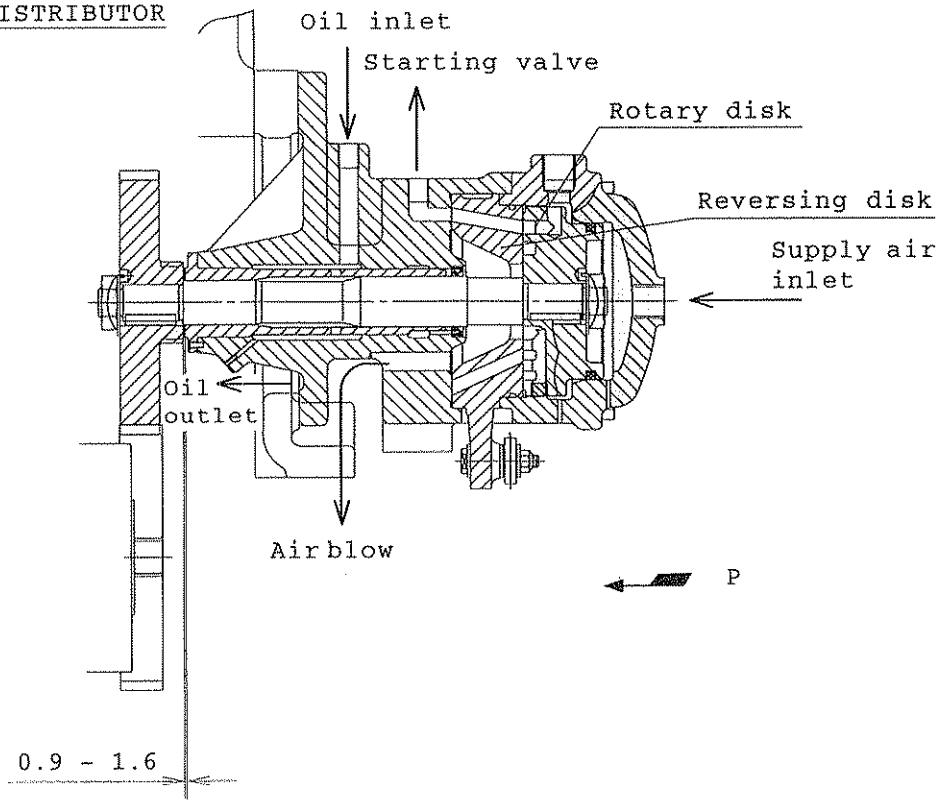

Test pin

TOOL No. 07C71

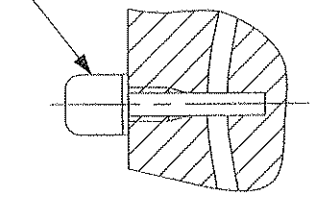

*Timing check

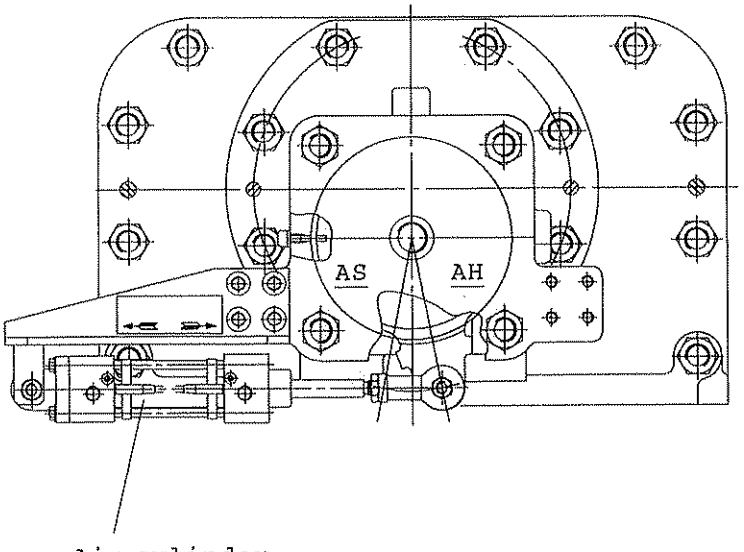

When reversing, reversing disk is turned by Air cyl. so that change the timing depends on the correlation between air supply groove for AH or AS on the rotary disk and air outlet holes on housing to each cyl.

Remarks

When timing check, turn the enigine so that No.1 cyl. at TDC. And confirm the groove on disk meets with hole on the housing. (*)

ADJUSTING METHOD OF CAM SHAFT TIMING

To correct the relative angle between crank-shaft and cam shaft, apply oil press. to the fuel cam and turn the cam shaft as shown in figure.

1(One) degree angular turning of cam-shaft corresponds to 1.7 mm on circumference of cam shaft.

Note

1. Advanced 1(One) degree angular turning of cam shaft
   = Fuel pump lead increased 1.50 mm
   = Exh. cam advanced angle increased 1 °
2. Heating temperature for shrinking on coupling, exh. and fuel cams (oil bath heating) max. 200 ℃

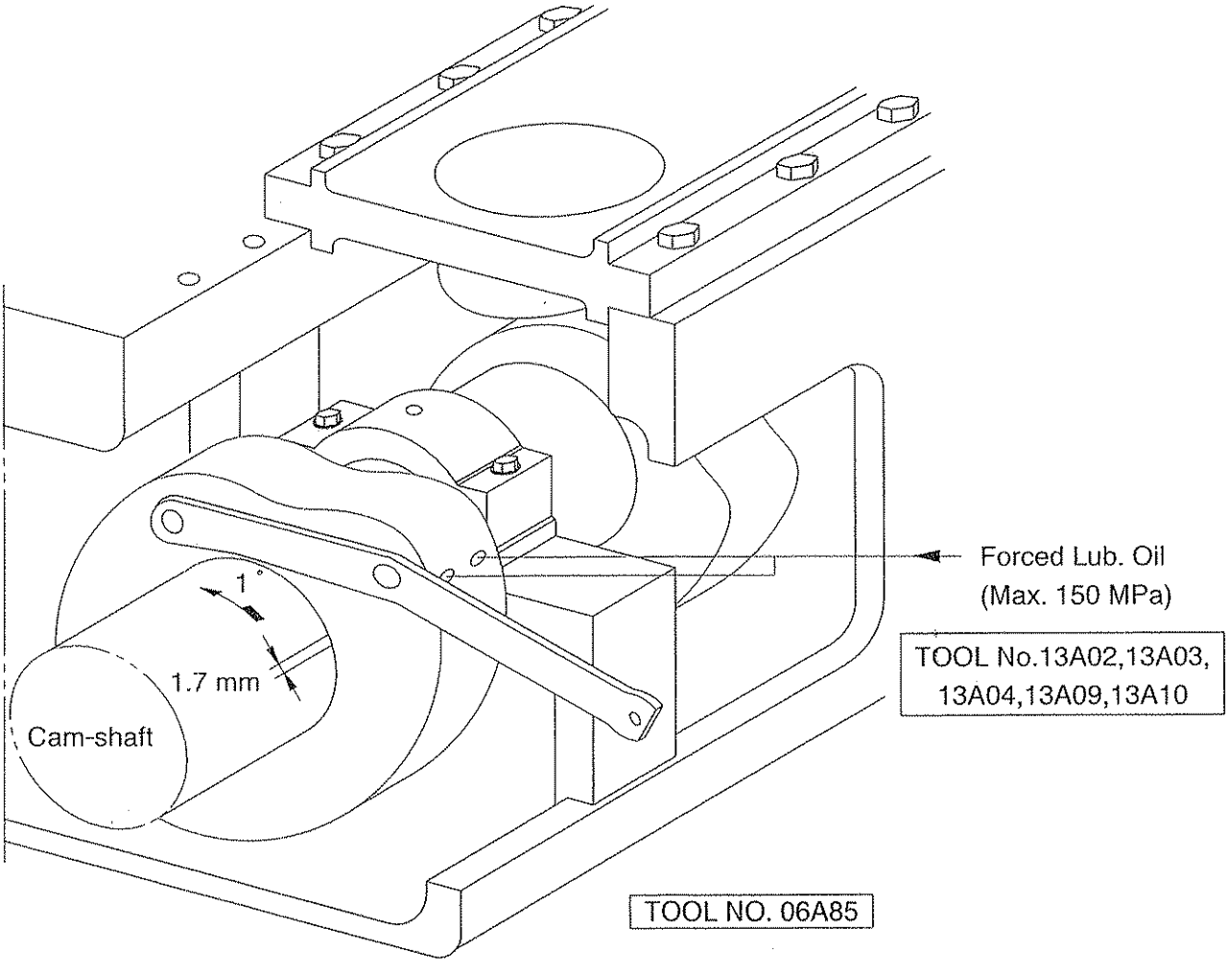

GENERAL VIEW OF FUEL PUMP

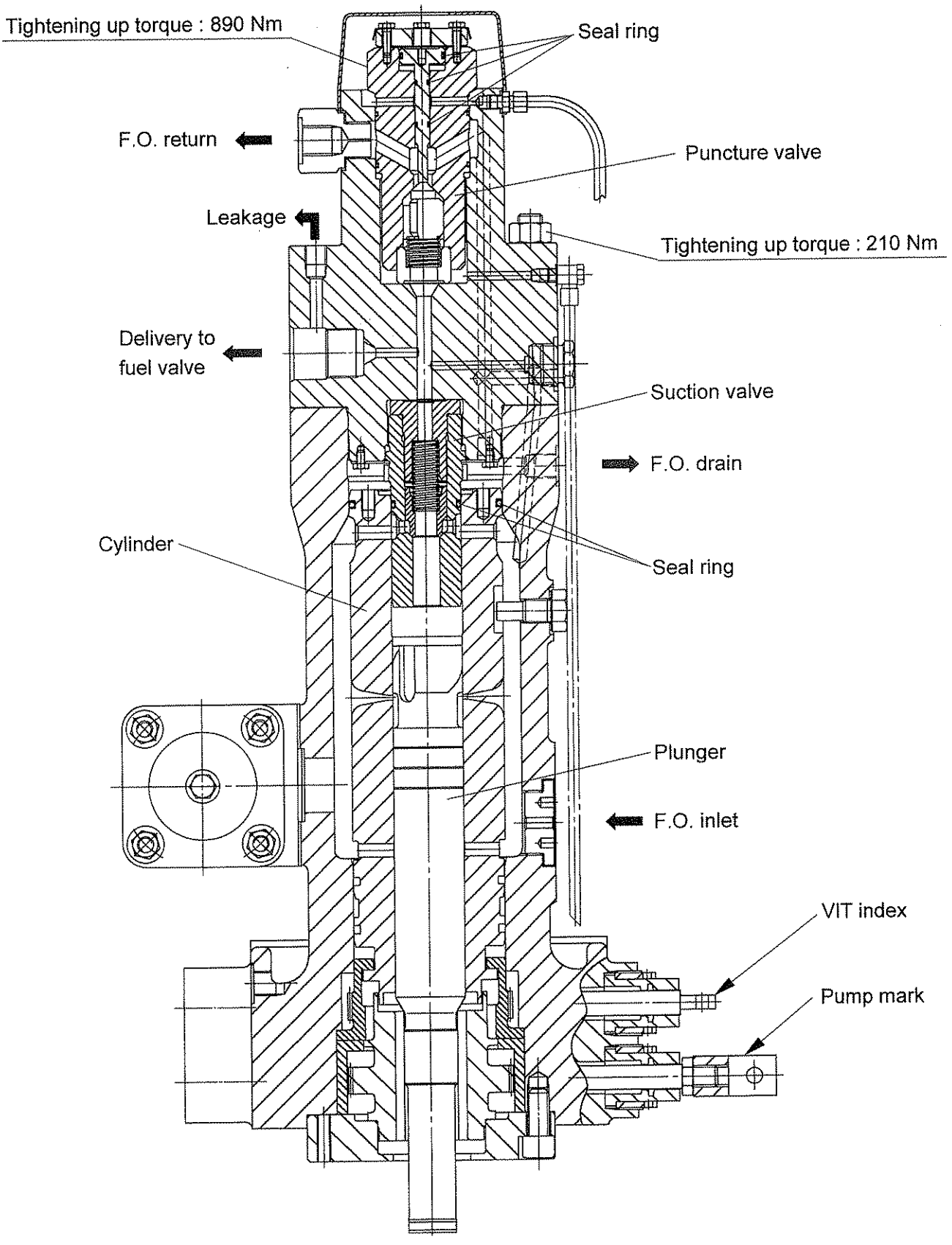

Fuel pump cam lead

TOOL NO.09B75

The fuel pump lead "**a**" (= the effective lead) is defined as the distance between the upper edge of the cut-off hole in the fuel pump barrel and plunger top when its piston is in TDC.

"**b**" is defined as the distance between the upper edge of the upper cut-off hole in the fuel pump barrel and plunger top in its piston position is BDC.

The fuel pump lead "**c**" of the fuel cam is defined as the number of mm that the plunger is lifted from its bottom position when the main piston is in TDC..

The lead of the fuel cam disc "**c**"
is a combination of two readings,
namely "**a**" and "**b**".
Both readings are with + or – sign.

The reversing mechanism must be in the position in which it is desired to measure the leads, i.e. "AHEAD" or "ASTERN".

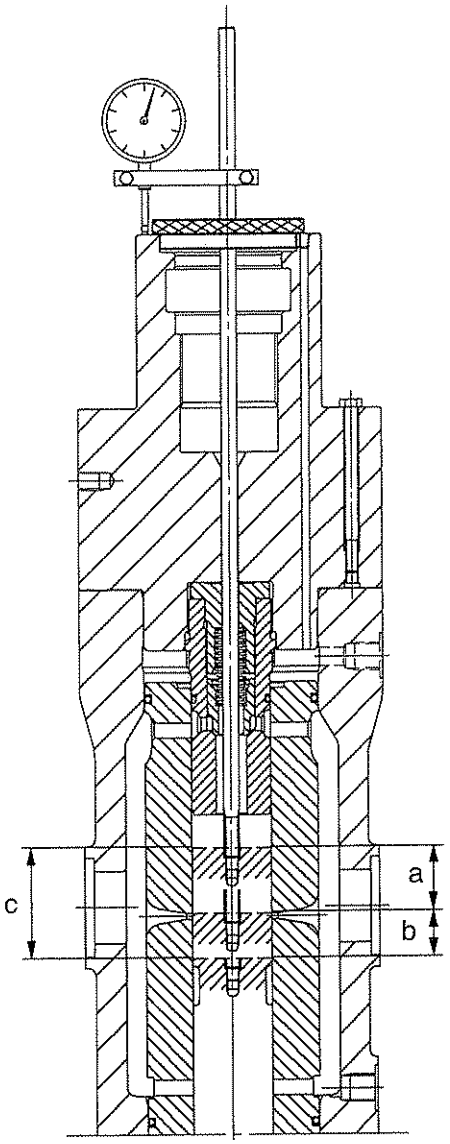

MEASUREMENT OF FUEL PUMP CAM LEAD

1. Close the fuel oil inlet valve.
   Loosen the drain plug, drain out from the fuel pump.
   Remove the puncture valve from the top cover of fuel pump.
   Make condition enable to use the measuring tool.
   Remove the erosion plugs.

2. Turn engine to ahead and set VIT index to zero (if fitted).

3. Turn the engine until the upper edge of the plunger closes off the upper edge of the cut-off holes.
   while plunger is lifted.

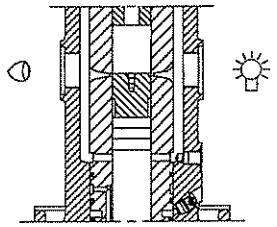

4. Mount the measuring tool on top the fuel pump top cover.
   Screw the measuring pin fully down into the threaded hole in the top of the pump plunger.
   Adjust the bracket of the measuring tool until the plunger of the dial gauge is at its middle position.
   Adjust the scale to 0(zero).

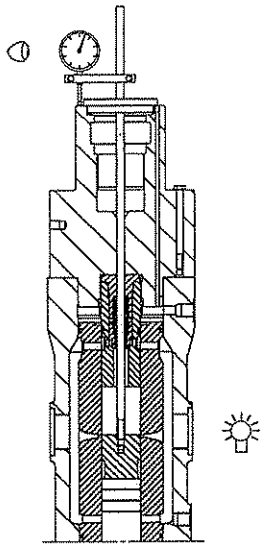

5. Turn ahead until the engine is in TDC.
   Note the reading on the dial gauge by absolute value as the deviation "a" between the "0" position and the present position.

6. Turn the engine by the roller is on the lowest part of the cam and thus the pump plunger is in the lowest position.
   Read the measuring result "b" by absolute value.

7. The fuel pump cam lead "c" is then calculated as follows;
   c = a + b (mm)
   * See P-34-1 Fuel Pump Lead c, Data

MAX. PRESS. "Pmax" ADJUSTMENT

A. Variable Injection Timing Control System

This system is designed to control the Pmax in the cylinder at the same level as that of 100% load over the load range between app. 85% and 100%. For that purpose, that fuel injection timing is changed automatically corresponding to the movement of the fuel regulating shaft.

B. Mechanism

An arm and a lever, which are linked with the fuel regulating shaft, control a reducing valve, which products the pilot air pressure to the pisitioners. Each positioner arranged at every cylinder is supplied with the air source of 0.7 MPa, which moves the fuel pump barrel according to the pilot air pressure.

GENERAL ARRANGEMENT

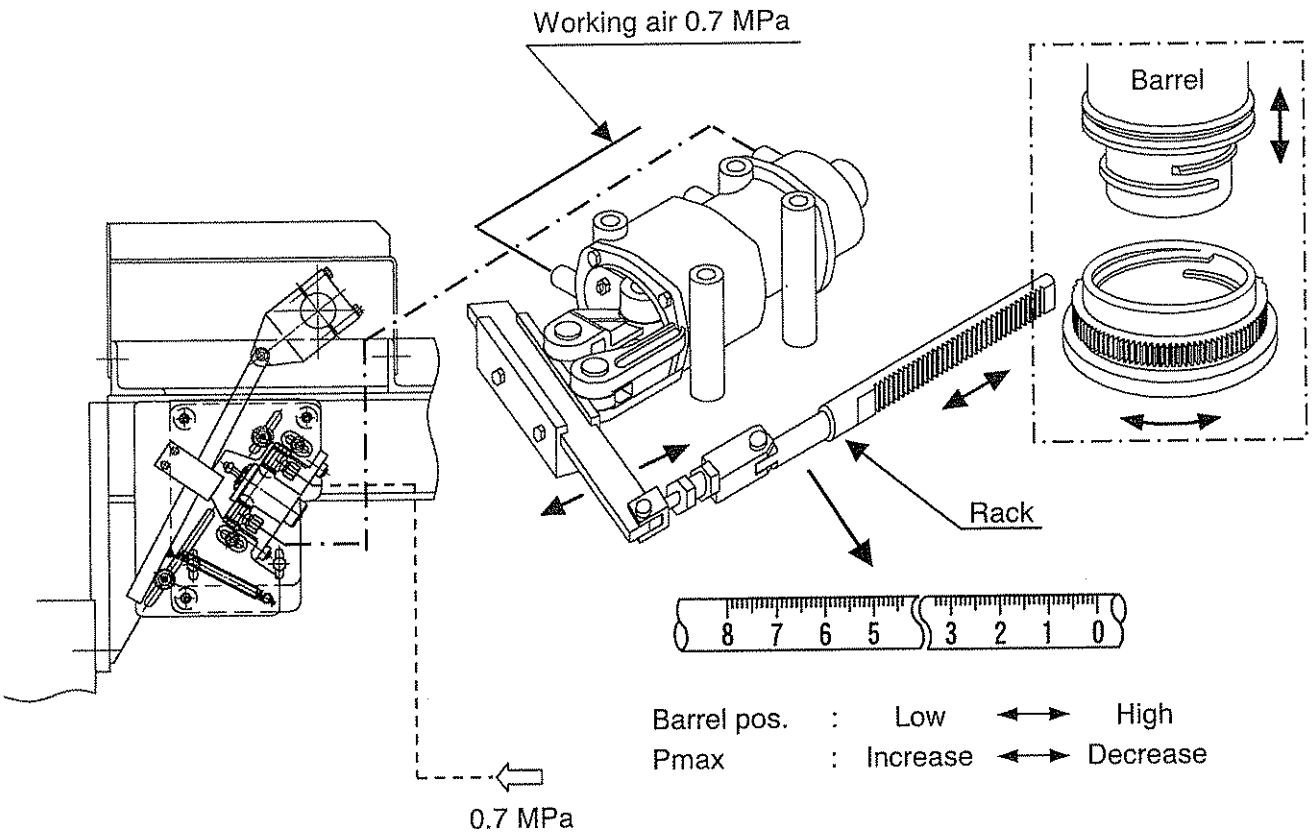

Remarks

Scale on the rack corresponds to the position of fuel pump barrel.

Max. shifting value of barrel is 8 mm vertically.

C. Control pattern

The movement of control lever for the reducing valve, which is linked with the fuel regulating shaft, is shown as the illustration below at each engine load condition.
And the pilot air from the reducing valve is supplied to the positioner so as to control the positioner index and the Pmax.

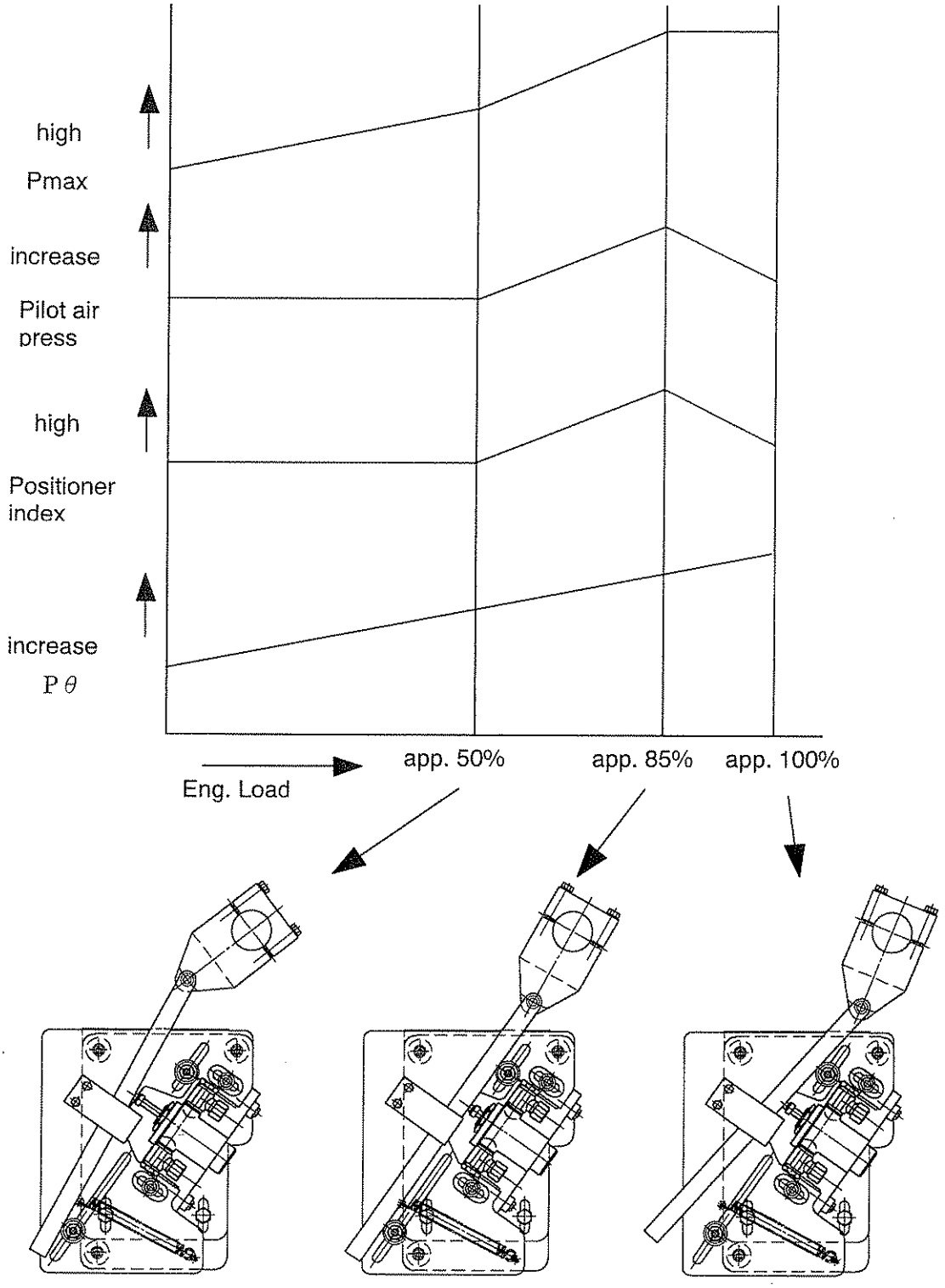

D. Adjustment

Since the Pmax has great influence over the performance as well as the reliability of the parts, it is advised not to touch the device. When it becomes strongly necessary to adjust the Pmax, the following adjustment may be done.

(1) Parallel shift of the Curve.
By axial displacement of the reducing valve with the bracket, fine adjustment of Pmax (for all cylinder) canbe done.

(2) Adjustment of Individual Cylinder.
If any particular cylinder shows especially low or high Pmax, VIT-rack of that cylinder may be adjusted by the adjusting link connected to VIT-rack.

Parallel shift of the Curve

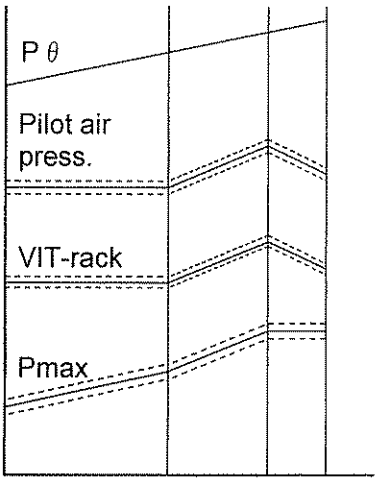

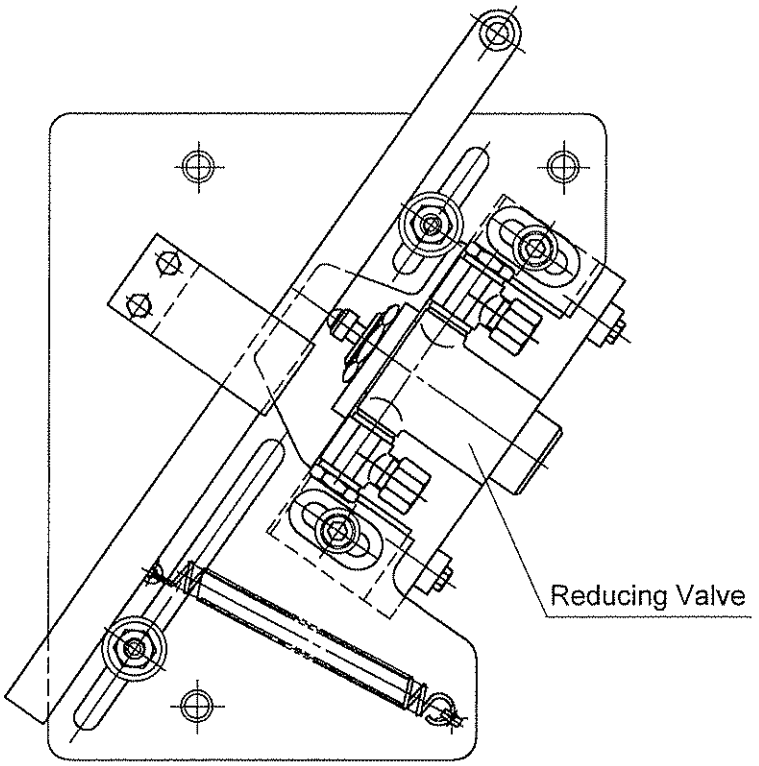

EXHAUST CAM ADVANCE ANGLE

(Fig. shows at cyl. piston top)

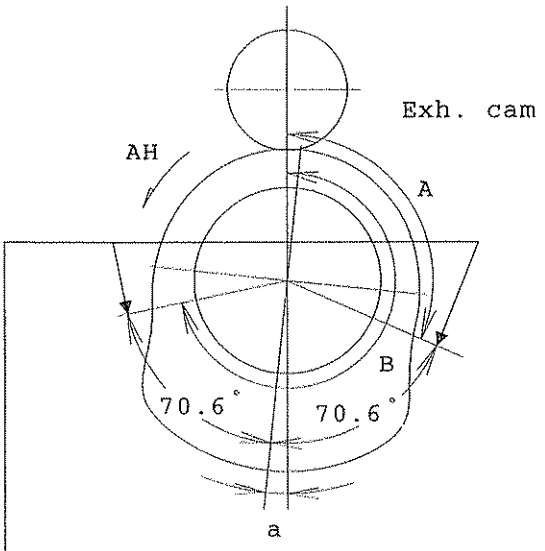

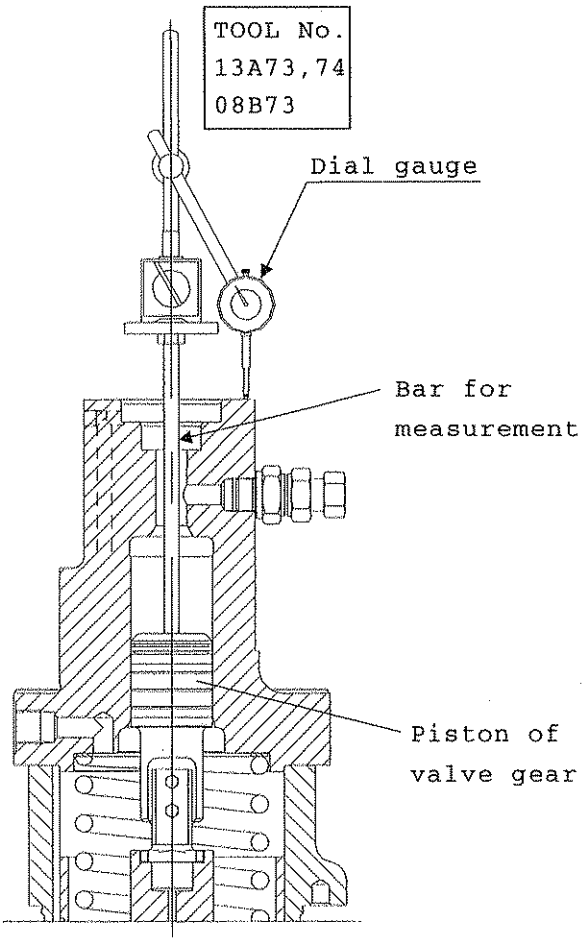

Valve opening & closing measuring position

1) Set the measuring tool on the valve gear as Fig..

2) Turn the engine "AH" side and read the crank angle "A" at the piston of valve gear lifted up 10.0 mm from exhaust cam base circle.

3) Moreover turn the engine "AH" side, the piston goes down again after the roller guide passed the top of exhaust cam. Then read the crank angle "B" when the piston of valve gear is lifted up 10.0 mm from exhaust cam base circle.

4) The advance angle is calculated as follows.

$$a = 180^\circ - \frac{A^\circ + B^\circ}{2}$$

Remarks

Measured advance angle is shown on data sheet P-34-1.

GENERAL DESCRIPTION

Shaft Revolution Ratio	Eng. Rev. : Shaft Rev. = 1 : 1
Plunger dia. x Lub. Point	ϕ4.5 × 6 Points/cyl.
Lub. Timing	Piston After B.D.C. 108.5 ± 5.5 deg.

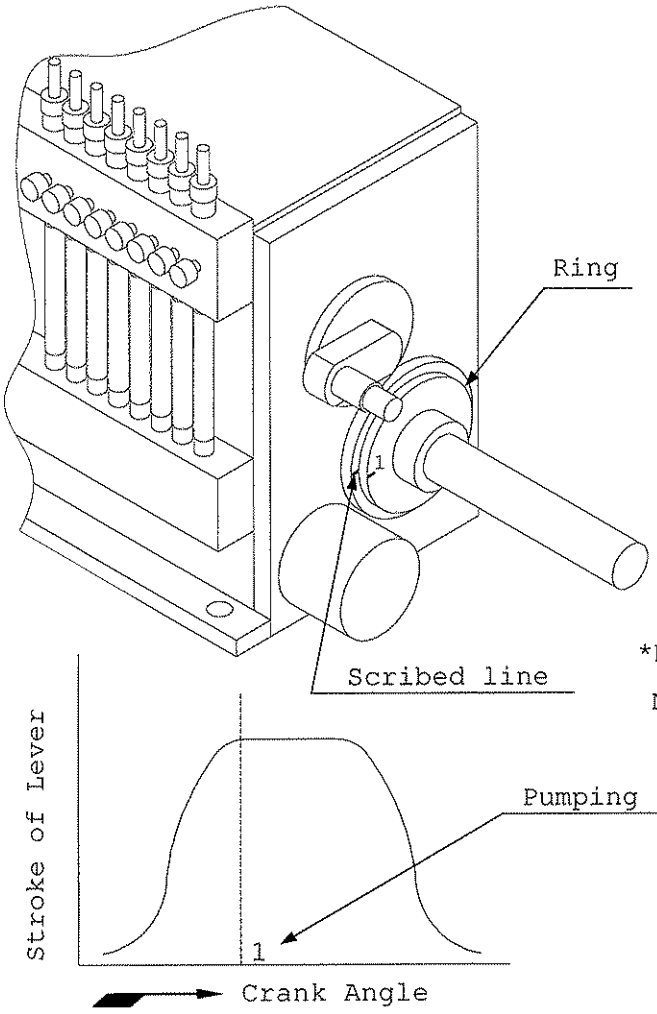

TIMING CHECK RING

On No.1(No.2) lubricator, at the pumping end of No.1cyl. (No.6cyl.),marking "1"("18") scribed on the ring points the scribed line on the pump casing

*No.1 lubricator is marked "1".
No.2 lubricator is marked "18".

Note : Operation of cylinder lubricating oil heater

If heater is installed in a lubricator, electric power is to be switched-on when stand-by and while engine running and the power is to be switched off when ship is in finished with engine.

ADJUSTMENT OF CYLINDER OIL FEED RATE

1) The below-mentioned reduction schedule is a guidance, the actual feed rate and its period should be adjusted based on the actual cylinder condition.
Before reduction toward lower feed rate, the scavenging port inspection should be carried out and it should be confirmed that the cylinder condition is good enough. After reducing the feed rate, the cylinder condition should be inspected at the next engine standstill condition.
In order to prevent the excessive wear of the cylinder liner and the piston ring, the sudden reduction of the feed rate is to be avoided at the initial running-in period.

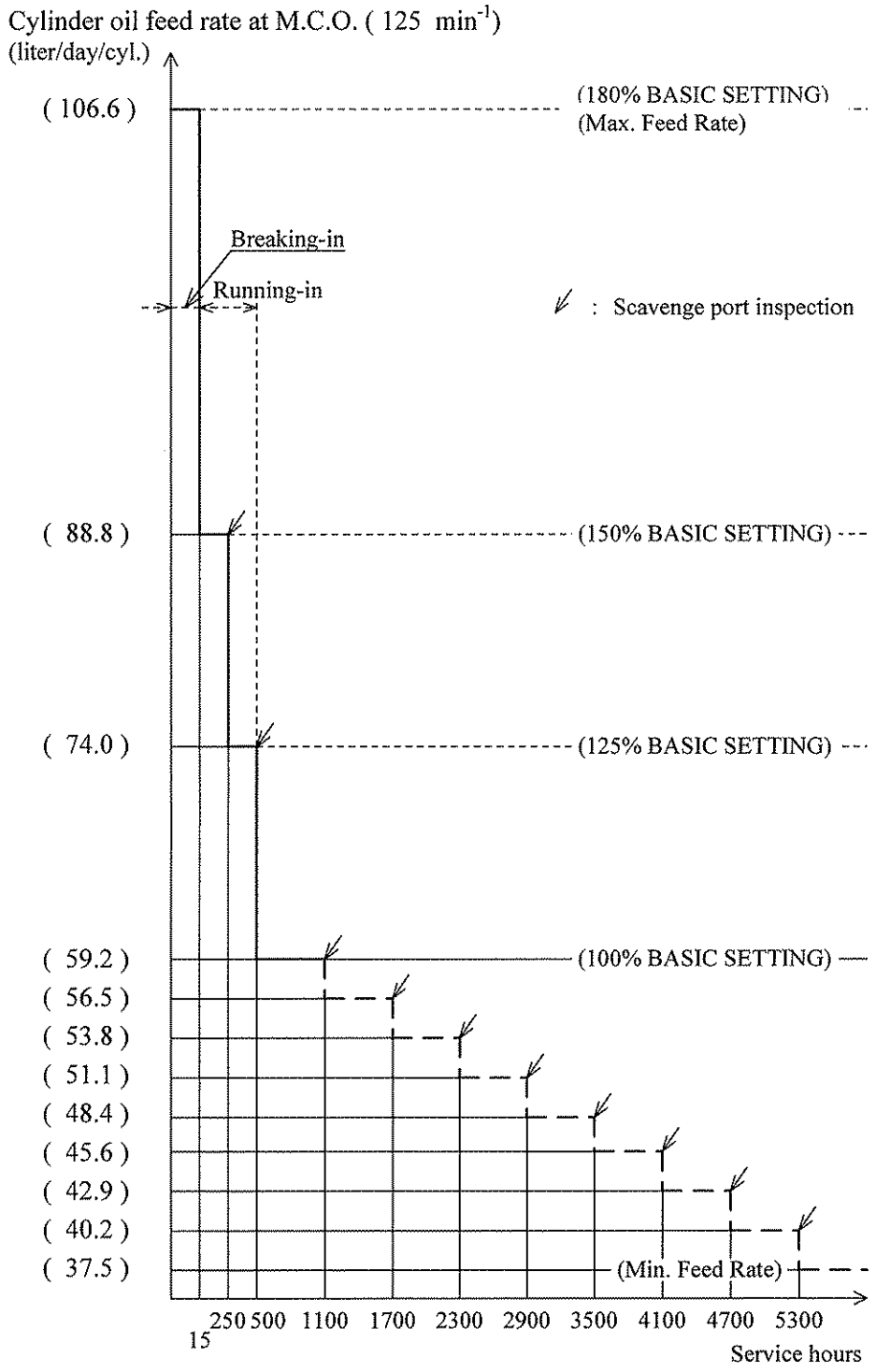

Oil feed rate would be much influenced by oil temperature (corresponding to engine room temperature) even though adjusting screw length and handle position are the same.
Therefore, when oil temperature changes, feed rate should be measures and re-adjusted if necessary.

A. For the first approx. 15 hours

In order to obtain good initial braking-in of the cylinder liner and piston ring, the cylinder oil feed rate should be adjusted to approx. 180% BASIC SETTING. by shifting the regulating handle on the cylinder lubricator.

The load on main engine during first braking-in period should be increased carefully as below.

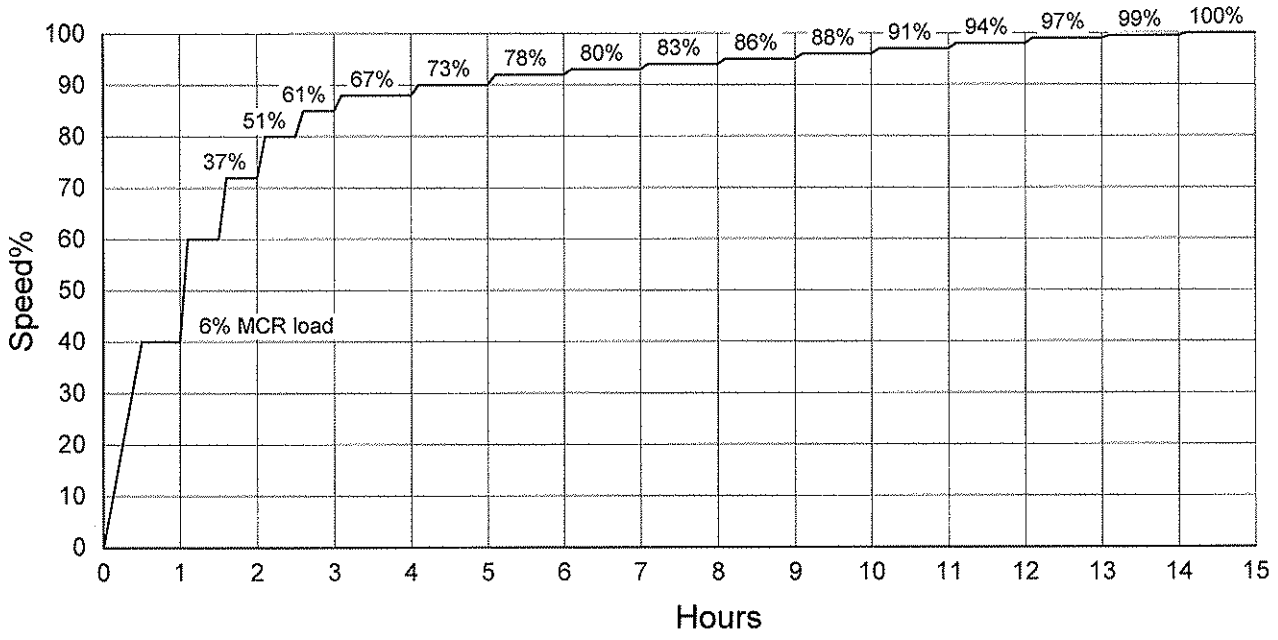

B. After breaking-in period, until 500 hours

A running-in feed rate can be adjusted as shown in P-16-2 by shifting the regulating handle on the cylinder lubricator.

Before reduction toward lower feed rate, the scavenge port inspection should be carried out and the cylinder condition should be proved satisfactory.

C. After 500 hours

After running-in period, BASIC SETTING of feed rate can be adjusted by changing the adjusting screw length after placing the regulating handle to "MIN." ("0") position.

After 1100 hours, the cylinder oil feed rate may be gradually reduced toward Min. Feed Rate in steps 600 hours. The reduction step should be smaller than (2.71) liter/day/cyl.

Before reduction toward lower feed rate, the scavenge port inspection should be carried out and the cylinder condition should be proved satisfactory.

2) When cylinder liner or piston ring in a particular unit is renewed.
The same adjusting/reducing procedure for feed rate should be applied to renewed unit.
And also load control on main engine for first breaking-in period should be applied.

3) During start and manoeuvring, the cylinder oil feed rate should be increased by shifting the regulating handle on the lubricator one notch.
~~(If the load-changed dependent lubricator is installed, oil feed rate in such case will be automatically increased.)~~

4) If abnormal cylinder conditions are found, the oil dosage should be adjusted to approx. 150% BASIC SETIING onto the correspond cylinder.
Maintain this over-lubrication until the cause of the problem has been eliminated, and scavenge port inspection proved that a safe condition has been re-established.

5) Priming of the cylinder lubricator before starting the main engine.
Priming of cylinder lubricator should be carried out before starting the main engine by the following method.
Engine should be turned during priming work.

➡ a) Without auto priming device
Since there is a timing where the pumps in lubricator are not injected depending on crank shaft angle, it should be checked if the balls in sight glass on lubricator are floating during priming.
Priming work should be carried out for about 2-3 minutes for each unit.

~~b) With auto priming device~~
~~Tuning on the "REMOTE PRIMING" button, priming will automatically start and automatically stop after setting time.~~
~~It should be checked if the balls in sight glass on lubricator are floating during priming work.~~

6) Cylinder oil consumption at specified MCR
The specific oil consumption (liter/day/cyl.) at specified MCR can be reduced in proportion to the ratio between output at specified MCR and at L1 (catalog) point.
The Specified MCR. is shown in P-1-1.

$$Q_{MCR} = Q_{L1} \times \frac{OUTPUT_{MCR}}{OUTPUT_{L1}}$$

where

Q_{MCR}	;	Cylinder oil feed rate at specified MCR	(liter/day/cyl.)
Q_{L1}	;	Cylinder oil feed rate at L1 point	(liter/day/cyl.)
$OUTPUT_{MCR}$	;	Engine output at specified MCR	(kW)
$OUTPUT_{L1}$	;	Engine output at L1 point	(kW)

Table: Cylinder oil feed rate at L1 (Catalog) point

Engine type	Output/cyl. (kW/cyl. × min^{-1})	mep (MPa)	Cylinder oil feed rate at L1 point	
			(liter/day/cyl.)	(g/kWh)
S50MC-C	1580 × 127	1.90	**61.8** ~ 39.2	**1.5** ~ 0.95

7) Cylinder oil consumption at part load

The cylinder oil feed rate at part load will normally be decreased in proportion to the ratio between speed at part load and at specified MCR (SPEED dependent regulation).

SPEED dependent regulation:

$$Q_{MCR} = Q_{part} \times \frac{SPEED_{MCR}}{SPEED_{part}}$$

where

Q_{part}	;	Cylinder oil feed rate at part load	(liter/day/cyl.)
$SPEED_{MCR}$	;	Engine speed at specified MCR	(min^{-1})
$SPEED_{part}$	;	Engine speed at part load	(min^{-1})

~~In case the MEP dependent cylinder lubrication system is mounted (option), the cylinder oil feed rata at part load will automatically be decreased in proportion to the ratio between mean effective pressure at part load and at specified MCR (MEP dependent regulation).~~
~~The MEP dependent regulation performed by this system is available in the range of 40%-60% MEP.~~

~~For the engine without this system, the cylinder oil feed rate running on part load for long period (low load operation) can also be adjusted manually as same procedure.~~
~~The feed rate should not be below 40% of rate for specified M.C.O.~~
~~Remember to adjust the feed rate nominal level, when low load operation is finished.~~

~~MEP dependent regulation:~~

$$Q_{MCR} = Q_{part} \times \frac{mep_{MCR}}{mep_{part}} \fallingdotseq Q_{part} \times \left(\frac{SPEED_{MCR}}{SPEED_{part}} \right)^2$$

where

mep_{MCR} ; Mean effective pressure at specified MCR (MPa)

mep_{part} ; Mean effective pressure at part load (MPa)

8) Conversion of cylinder oil consumption (liter/day/cyl) to feed rate (g/kWh).
Evaluating the cylinder oil consumption (liter/day/cyl.) by feed rate (g/kWh), following formula is to be used;

$$\begin{pmatrix} \text{Cyl. oil feed rate} \\ \text{at specified MCR} \\ \text{(g/kWh)} \end{pmatrix} = Q_{MCR} \times \frac{\begin{pmatrix} \text{Number of} \\ \text{Engine cylinders} \end{pmatrix}}{OUTPUT_{MCR}} \times \frac{\rho \times 1000}{24}$$

where

ρ ; Cylinder oil specific density, guidance value 0.92 (kg/liter)

9) Choice of cylinder lubrication oil
Cylinder oil should be of the SAE 50 viscosity grade.
Generally, cylinder oil with less than TBN 40~50 is used for low-sulphur fuel oil (less than 1.5 wt%), and cylinder oil with TBN 70 is used for high-sulphur fuel oil. Considering service experience, however, it has been confirmed that use of cylinder oil with TBN 70 for low-sulphur fuel oil has caused few problems except for cases of excessive dosage of cylinder oil. Therefore, it is acceptable to use cylinder oil with TBN 70 for low-sulphur fuel oil.

It has been reported, however, some cylinder oils with high TBN are not compatible with certain low-sulphur fuels or some diesel oils, and something is wrong with the cylinder condition. If such deterioration of the cylinder condition is happened, the relation between dosage and alkalinity of cylinder oil should be taken consideration, i.e., the dosage of cylinder oil may have to be reduced.
Please refer the MITSUI MINI NEWS, No. 82 "Guideline for using low-sulphur fuel oil".
However, reducing fuel oil dosage may not cope with very lower sulphur fuel oil (e.g. 0.5wt%). In this case, it is recommended to change the cylinder oil with lower TBN (e.g. TBN40)

TIGHTENING BY HYDRAULIC OIL JACK

No.	ITEM	TIGHTENING OIL PRESS.	Tool No.	REMARKS
1	Nut for cyl. cover	150 MPa	J:01A01 F:01A02	cf. P-19-1
2	Nut for exh. valve	150 MPa	J:08A01 F:08A02	
3	Nut for crosshead pin bearing	150 MPa	J:01A01 F:04A02	
4	Nut for crank pin bearing	150 MPa	J:04B01 F:04B02	
5	Nut for main bearing	150 MPa	J:05A01 F:05A02 S:05A04 J:05A06 N:05A09	cf. P-18-1
6	Nut for cam-shaft bearing	150 MPa	J:06A01 F:06A02	
7	Nut for tie bolt	150 MPa	J:12A01 F:12A02	
8	Nut for chain wheel	150 MPa	J:06A01 F:05C02	
9	Nut for segment stopper	150 MPa	J:06A01 F:05C02	
10	Nut for axial vibration damper	150 MPa	J:06A01 F:05C02	
11	Nut for chain tightener / intermediate shaft	150 MPa	J:06A01 F:06A02	

*Tool No. -------- J : Jack, F : Foot, S : Stud, N : Nut

Remarks

1) When dismantling nut, it may be necessary to increase ab. 4.9 MPa more that the above pressures. However, not to exceed 110 % of the above pressure.

2) Suitable oil for the hydraulic pump is angler degree 4.5° E at 50℃ (No. 140 turbine oil) or less.

3) In case used light oil (gas oil) and so on, special attention is necessary for anti-corrosions in the hydraulic jack and pump after used.

PISTON, PISTON ROD, CROSS HEAD & CONNECTING ROD

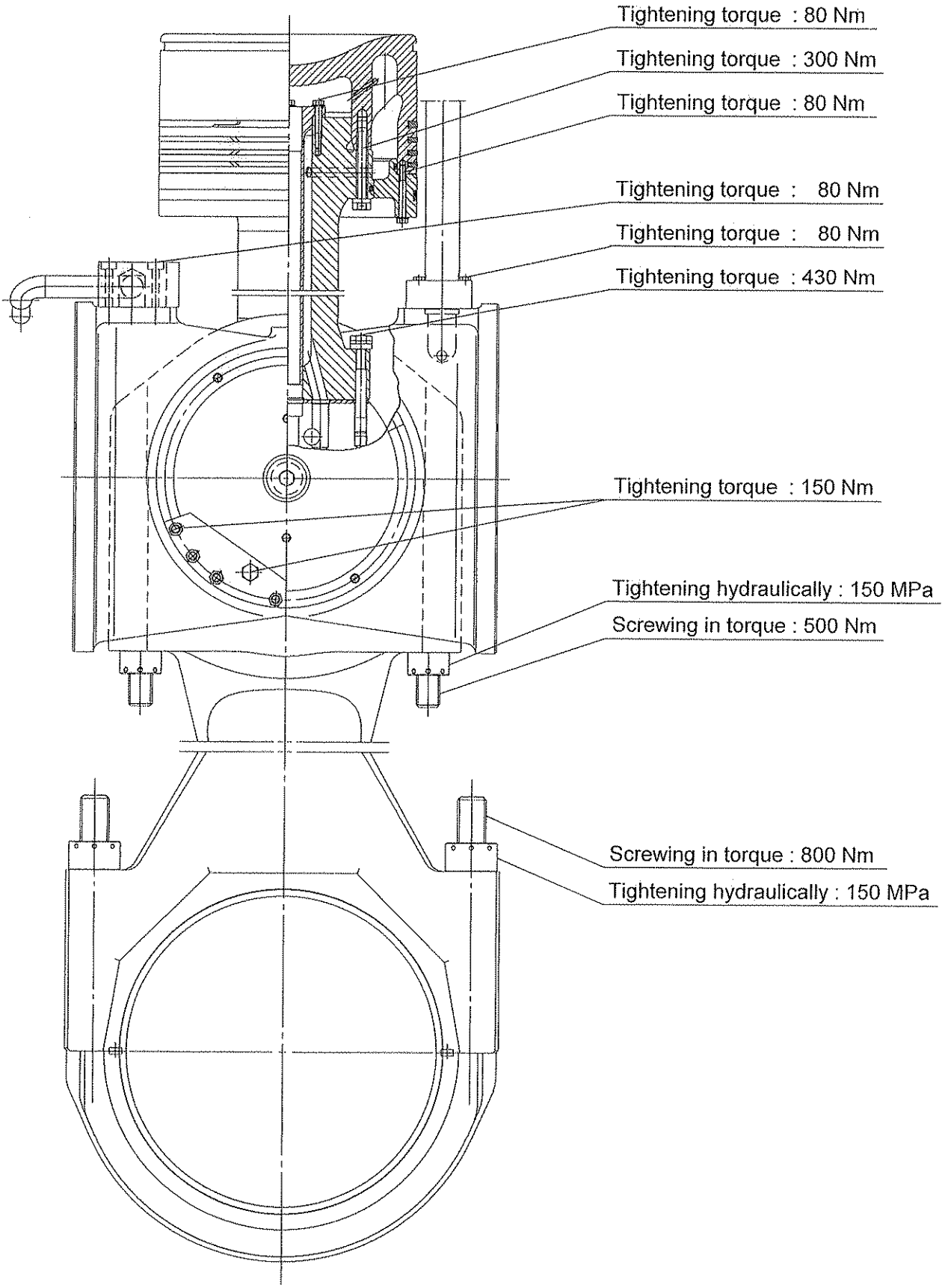

MAIN BEARING TIGHTENING

1) To get uniform tightness on each upper-cap, 4 stud-bolts should be tightened at the same time by 150 MPa.

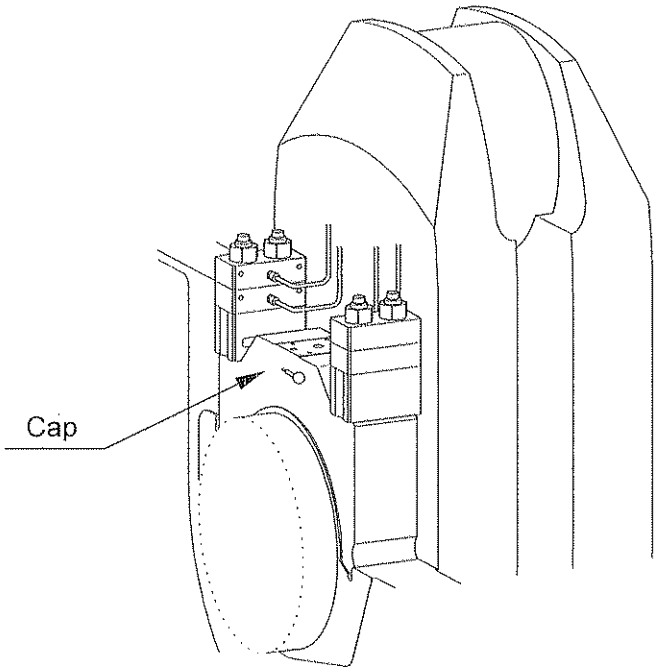

TOOL No.05A01,02,04,06,09

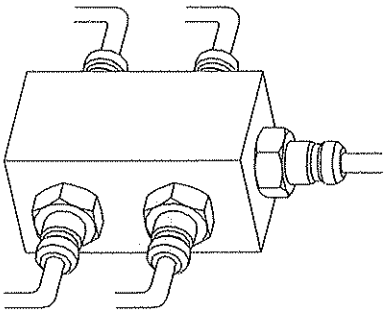

DISTRIBUTOR

13A05

STARTING VALVE TIGHTENING

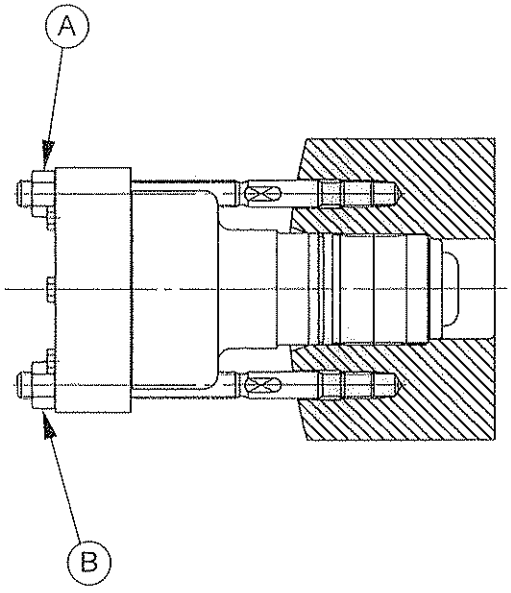

To get even surface pressure-distribution, fitting nuts to be tightened in the following method.

Fitting method

1) Valve seat of starting valve and cylinder cover to be cleaned.
2) Nut (A) , (B) to be tightened. (finger tight)
3) Nut (A) to be tightened by 60 N.m.
4) Nut (B) to be tightened by 175 N.m.
5) Nut (A) to be tightened by 175 N.m.

In a case when the valve-seat is of uneven surface pressure-distribution, gas leakage might occur from the valve-seat.

TOOL No.07A86,13A87,13A91

CYL. COVER TIGHTENING METHOD

1. Install the packing on the seat of cylinder liner.
   DO NOT USE ANTI-SEIZURE PASTE BETWEEN COVER/GASKET/LINER.
   GASKET TO BE BONDED IN OUTER DIAMETER TO CYLINDER LINER BY SPOT OF ADHESIVE AGENT.
2. Apply the anti-seizure paste on the nuts and thread of tightening stud.
3. Fix the tightening tool as shown below.
4. Tighten 8 nuts at the same time.

TOOL No.01A01,02

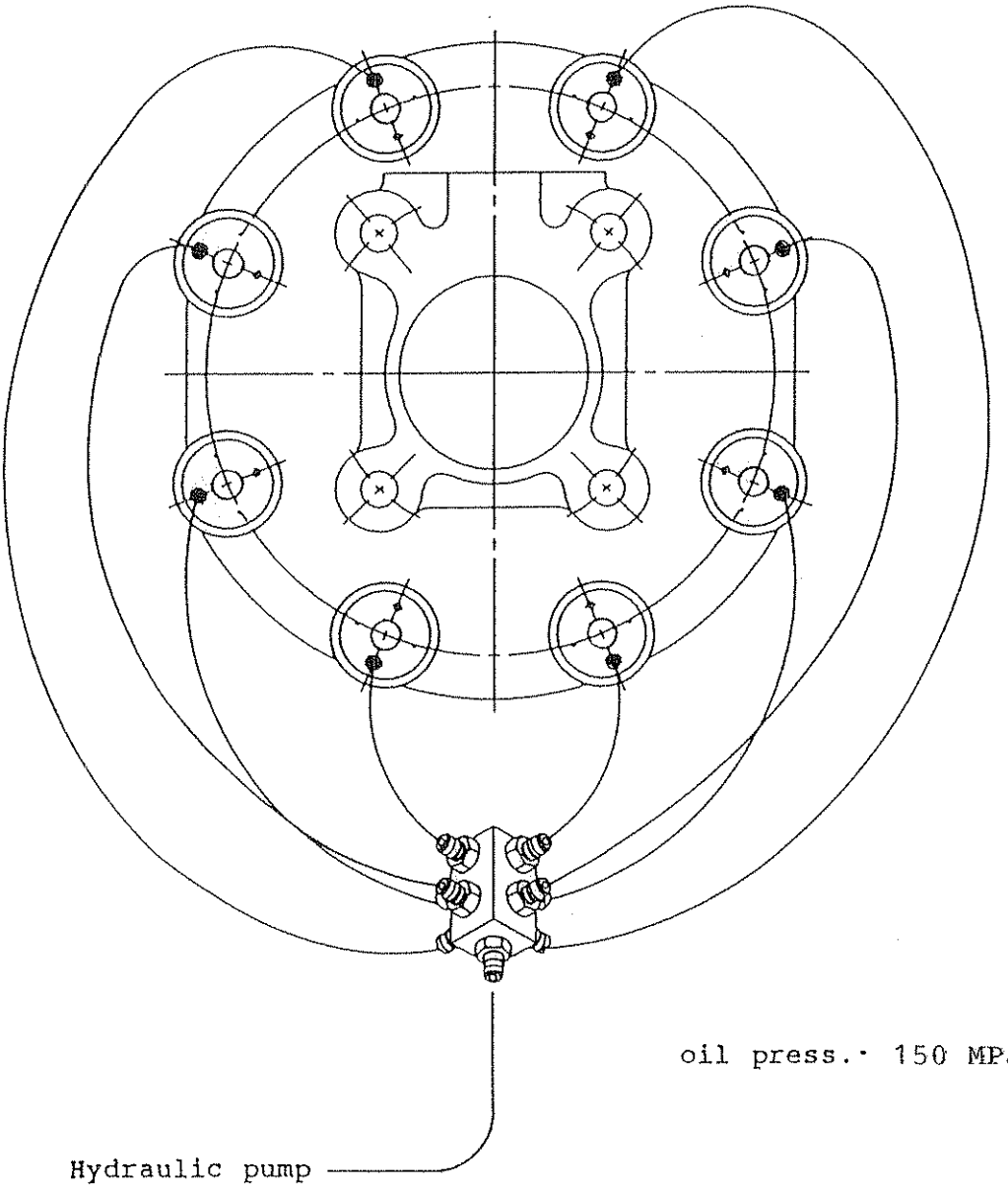

CYLINDER COVER

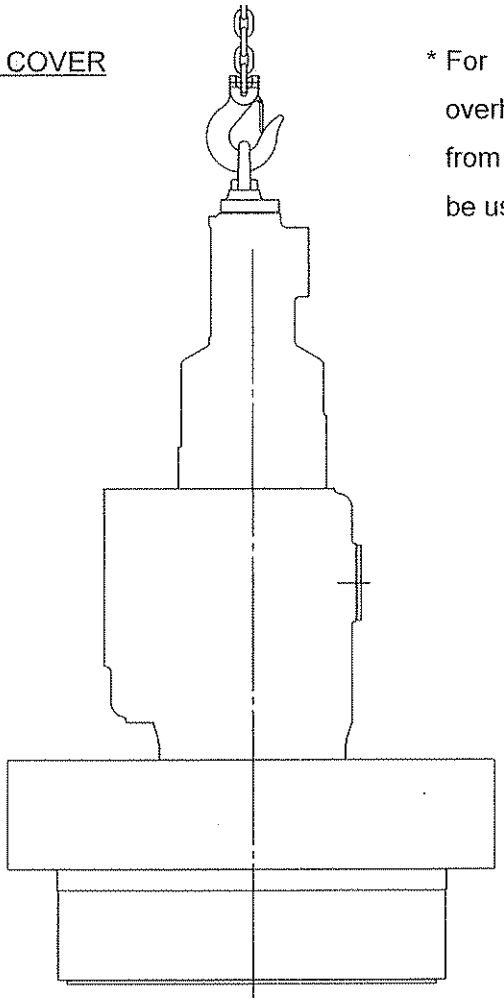

* For lifting the engine components during overhauling/assembling, eyebolts supplied from engine builder (TOOL No.13A20) are to be used.

Exh. Valve Complete	:	438 kg
Cyl. Cover	:	1171 kg
Fuel Valve (2 sets)	:	16 kg
Starting Valve	:	18 kg
Cyl. Cover Complete (Exh. V, F.V., Start V)	:	1643 kg

Lifting Tool for Cover

TOOL No.01A12,13A20

EXHAUST VALVE

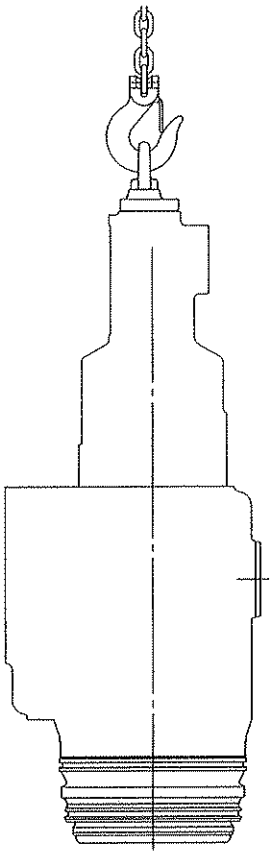

Hydraulic cyl.	:	74 kg
Valve Spindle	:	43 kg
Valve Seat	:	53 kg
Valve Housing	:	231 kg
Exh. Valve Complete	:	438 kg

S50MC-C	LIST OF MAIN PART'S WEIGHT	E(c)
	PISTON & CROSS HEAD	P-21-1

PISTON

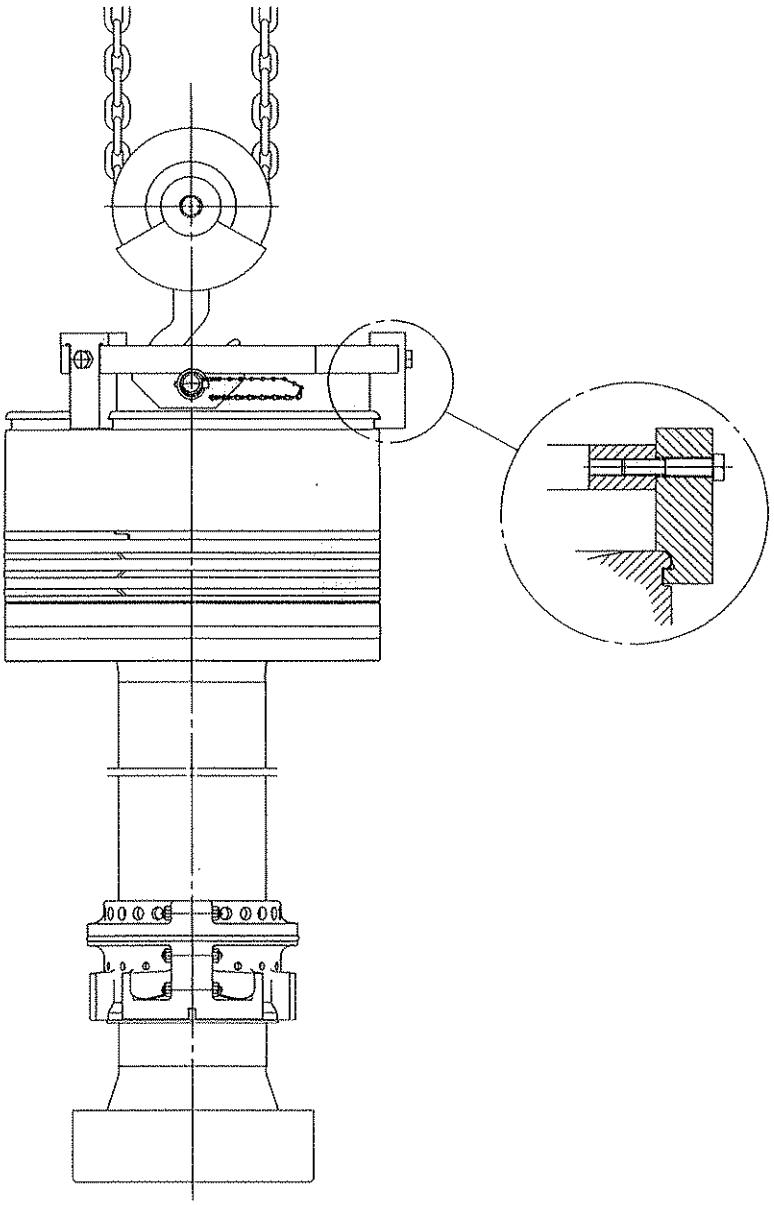

Stuffing box	:	58 kg
Piston complete	:	854 kg
Piston complete (With stuffing box)	:	929 kg
Lifting tool	:	26 kg
Total	:	955 kg

TOOL No.02A11

CROSS HEAD

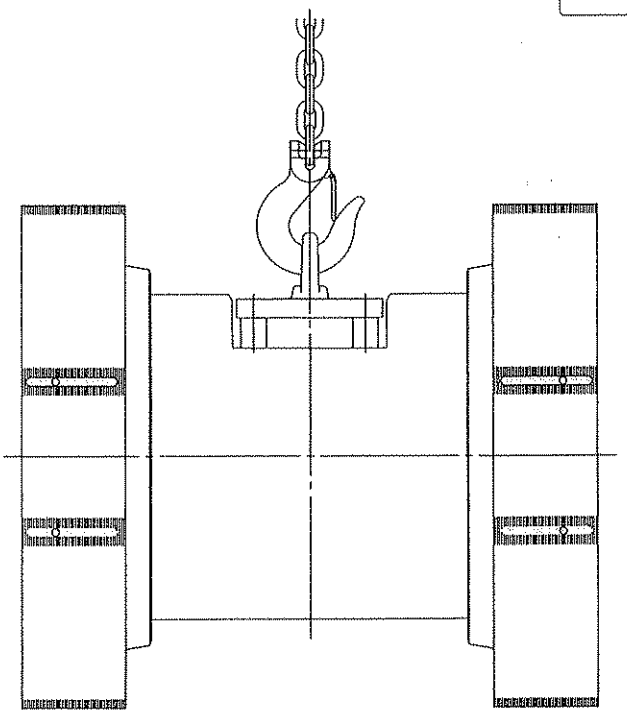

Cross head pin	:	748 kg
Guide shoe (1 set)	:	342 kg
Lifting tool	:	6 kg
Total	:	1093 kg

TOOL No.04A15

S50MC-C	LIST OF MAIN PART'S WEIGHT	E(c)
	CYLINDER LINER & CONNECTING ROD	P-22-1

CYLINDER LINER

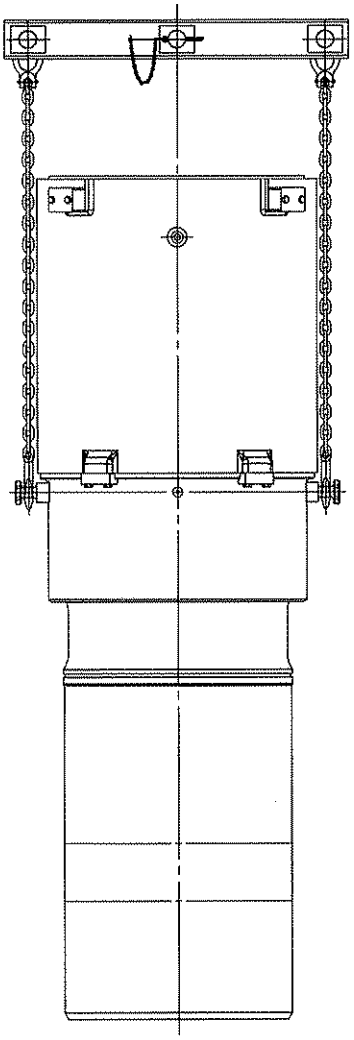

Lifting Tool

TOOL NO. 02A12, 03A15

Cyl. liner	:	1636 kg
Cooling jacket	:	178 kg
Lifting tool	:	39 kg
Total	:	1853 kg

CONNECTING ROD

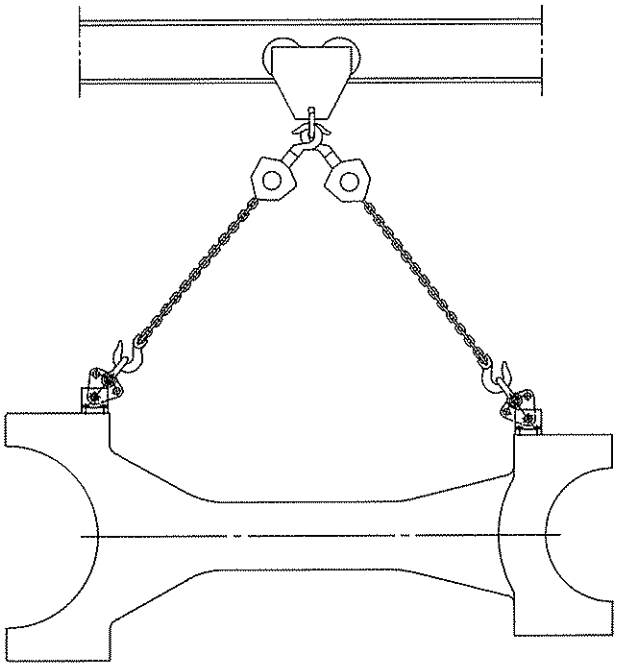

Connecting rod	:	1020 kg
Cross head pin bearing	:	14 kg
Crank pin bearing	:	14 kg
Lifting attachment	:	10 kg
Total	:	1058 kg

TOOL NO. 04B12

CROSS HEAD PIN BEARING & CRANK PIN BEARING

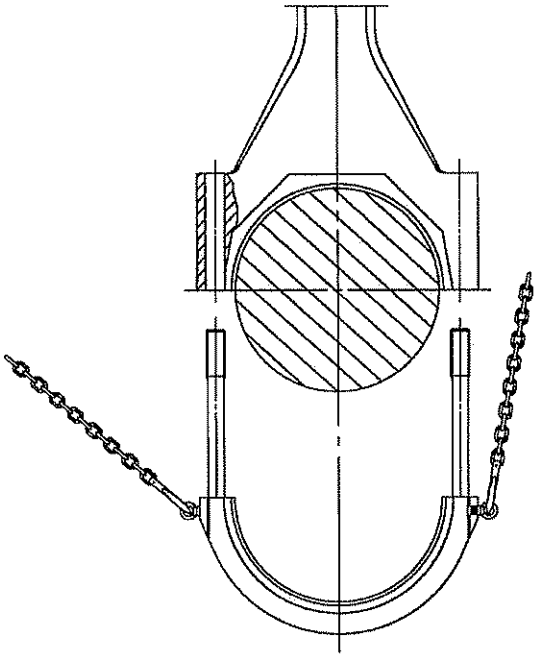

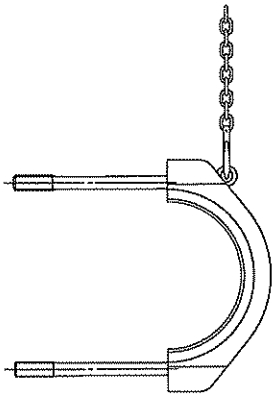

Crank pin bearing : 154 kg
(Upper, Lower Shell & studs)

Cross head pin bearing : 219 kg
(Cap & Upper Shell)

TURBO-CHARGER

TYPE	Silencer complete	Volute casing	Compressor wheel	Rotor shaft	Gas inlet pipe
TCA66	550	1030	75	135	420
~~TCA77~~	~~1000~~	~~1780~~	~~130~~	~~220~~	~~755~~
~~TCA88~~	~~1700~~	~~2890~~	~~210~~	~~370~~	~~1100~~

Unit : kg

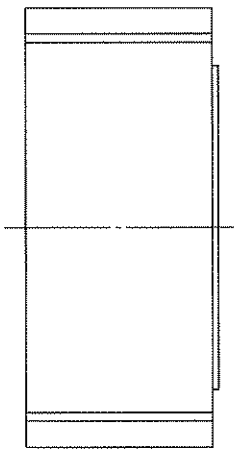

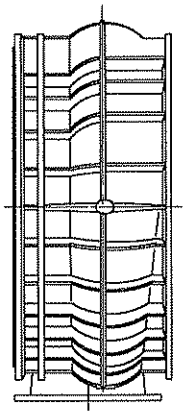

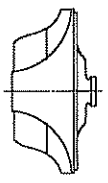

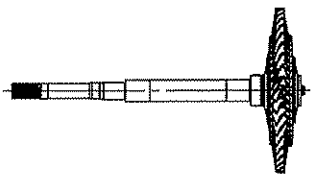

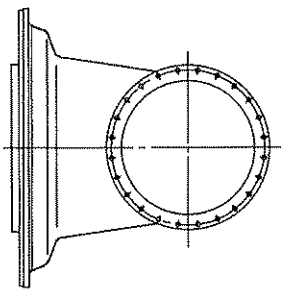

Silencer complete

Volute casing

Compressor wheel

Rotor shaft

Gas inlet pipe

* For lifting the engine components during overhauling / assembling, eyebolts supplied from engine builder (TOOL NO. 13A20) are to be used.

(Unit : kg)

No.	ITEM	WEIGHT	REMARKS
1	Tie bolt with nuts	73	
2	Fuel pump complete	145	
3	Roller guide for fuel pump	57	
4	Roller guide for exh. valve gear	37	
5	Exh. valve gear complete	71	
6	High press. pipe for exh. valve gear	33	
7	Expansion joint of exh. gas	30	
8	Main starting valve with non-return valve	245	
9	Main chain complete(158 rinks × 2 Lanes)	1044	
10	Guide slipper for main chain(1 set)	37	
11	Cam shaft bearing(Lower)	3	
12	Cam shaft shell type bearing Upper & Lower (1 set)	12	
13	Cylinder lubricator	42	
14	Starting air distributor	42	
15	Main bearing cap(1 piece)	250	
16	Main bearing upper shell	35	
17	Main bearing lower shell	35	
18	Thrust pad stopper	25	
19	Thrust pad (1 piece)	30	
20	Turning gear	564	
21	Mist catcher complete	201	
~~22~~	~~T/C complete(NA48S)~~	~~4000~~	~~Dry weight~~
~~23~~	~~T/C complete(NA57)~~	~~5040~~	~~Dry weight~~
24	T/C complete(TCA66)	5500	Dry weight
~~25~~	~~T/C complete (VTR564D)~~	~~7600~~	~~Dry weight~~
~~26~~	~~T/C complete (MET66SD)~~	~~5900~~	~~Dry weight~~
~~27~~	~~T/C complete (TPL77)~~	~~3928~~	~~Without silencer/ air suction branch~~

RELATION BETWEEN GOVERNOR ACTUATOR POS. AND PUMP MARK

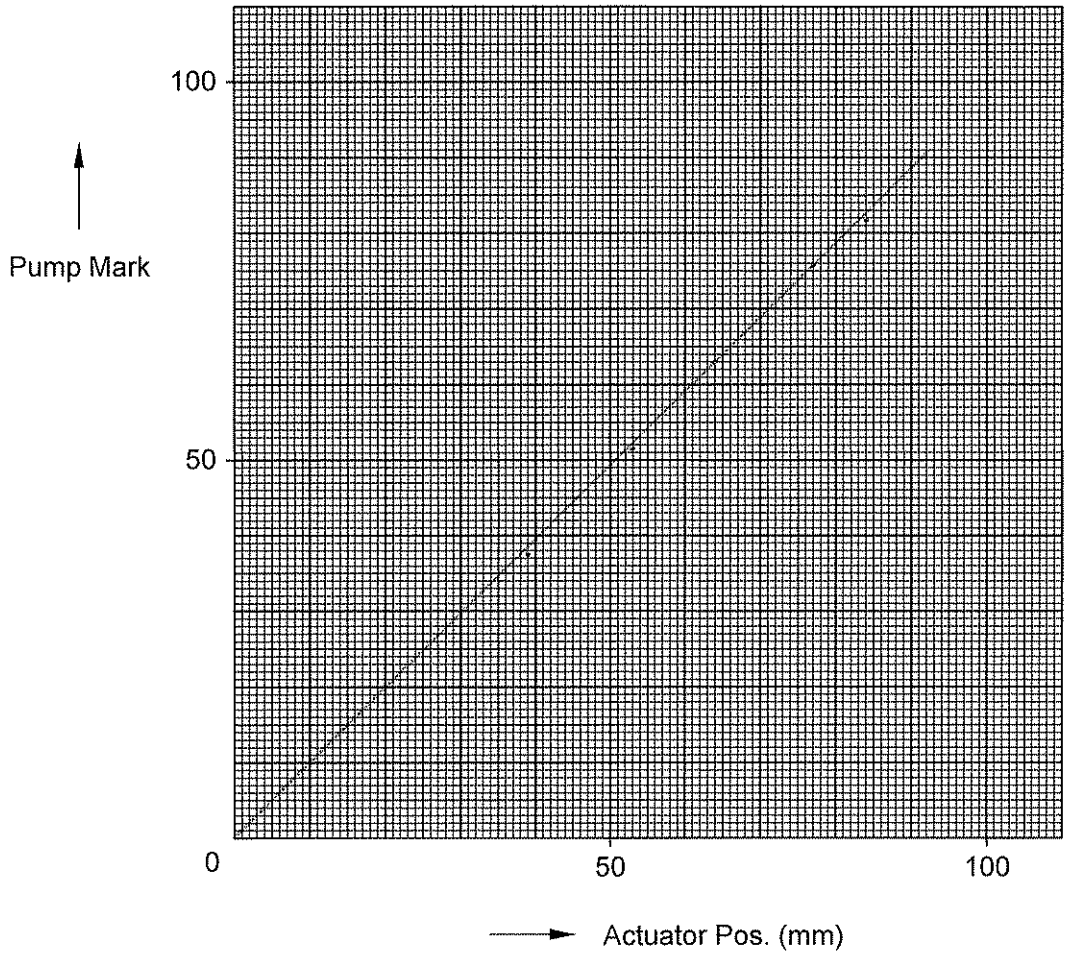

*) Engine side control

Engine side handle pos. - - - - - - - Pump mark

"STOP" pos. - - - - - - - 0

"MAX" pos. - - - - - - - 91

SPEED CONTROL

Relation between speed control signal and engine revolution.

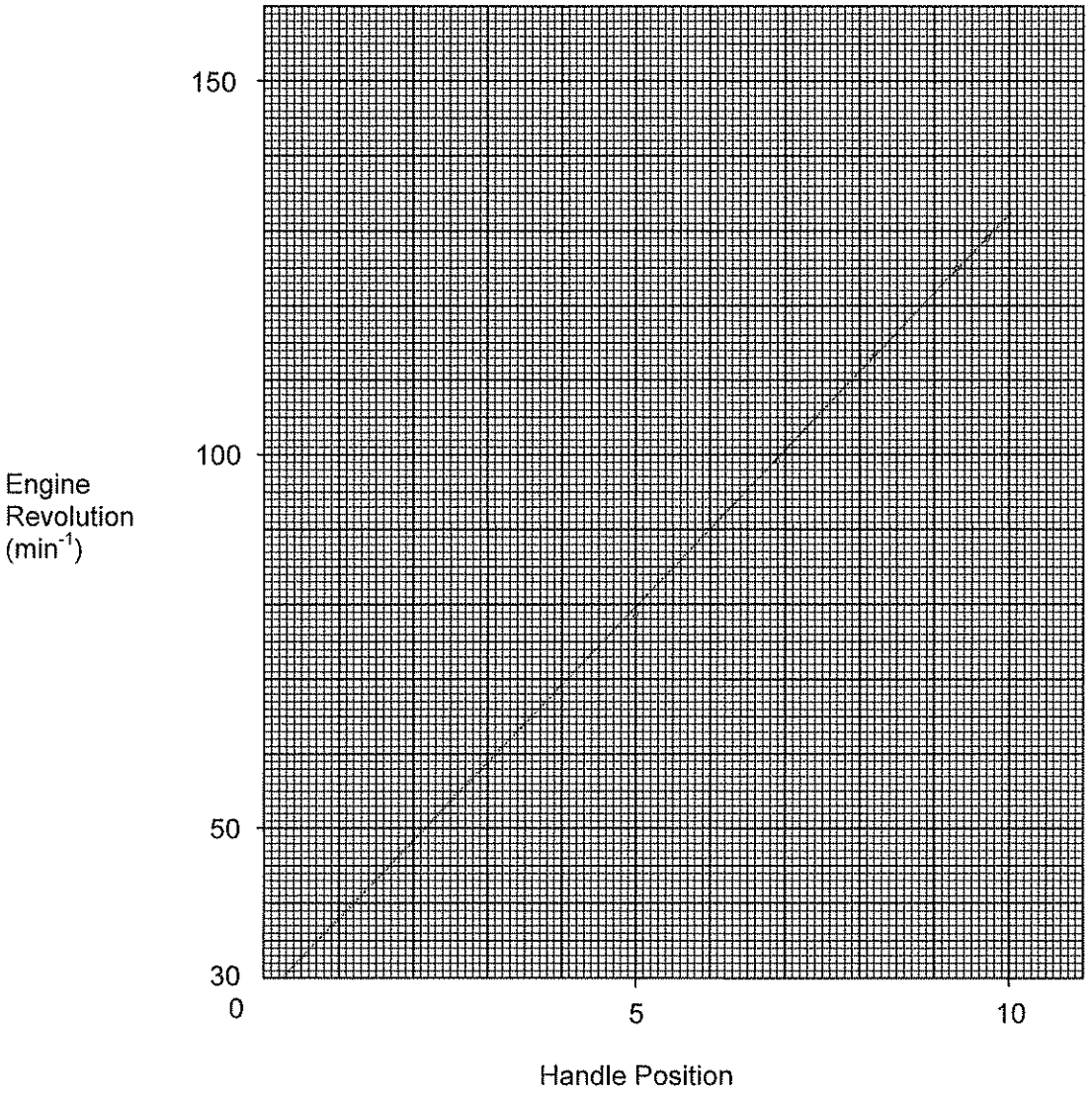

Limit by Scavenging Air Pressure

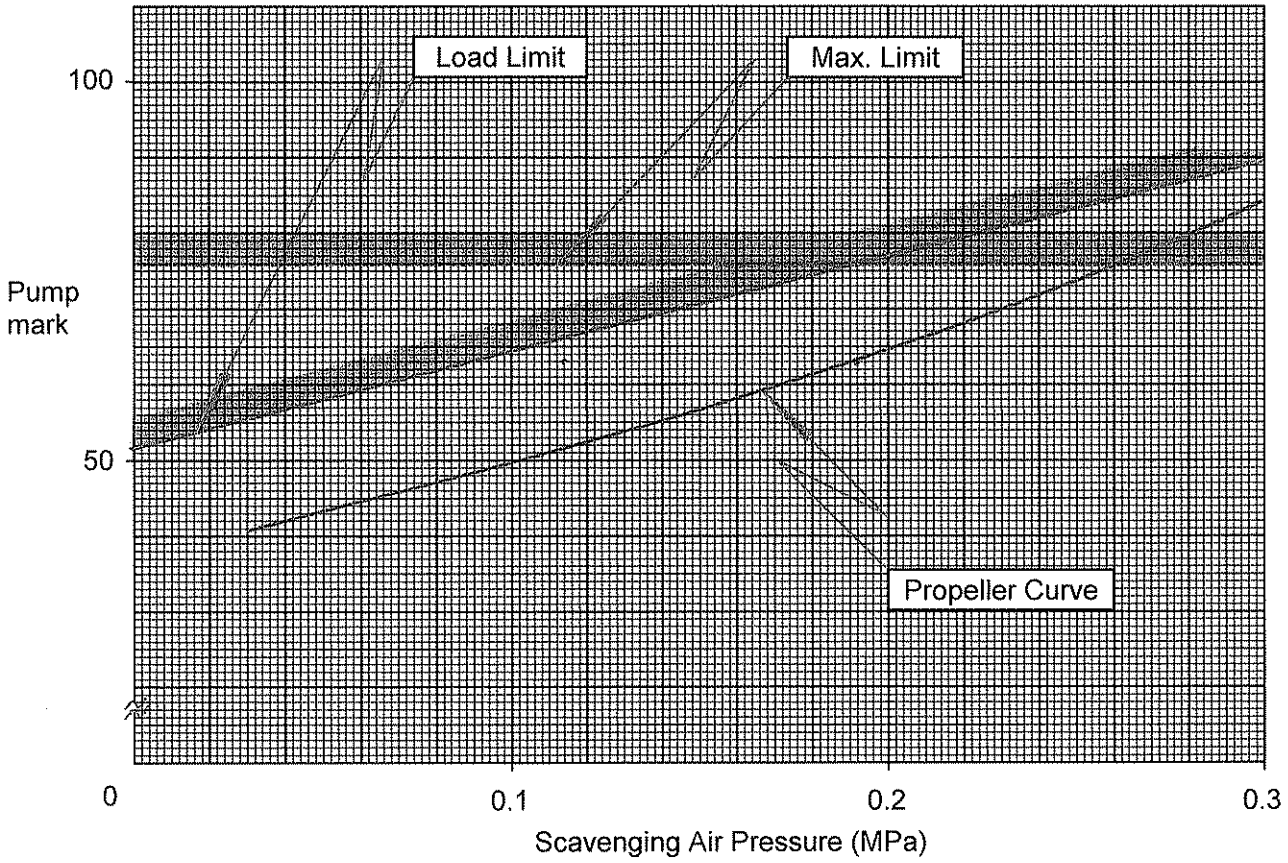

Limit by Engine Speed

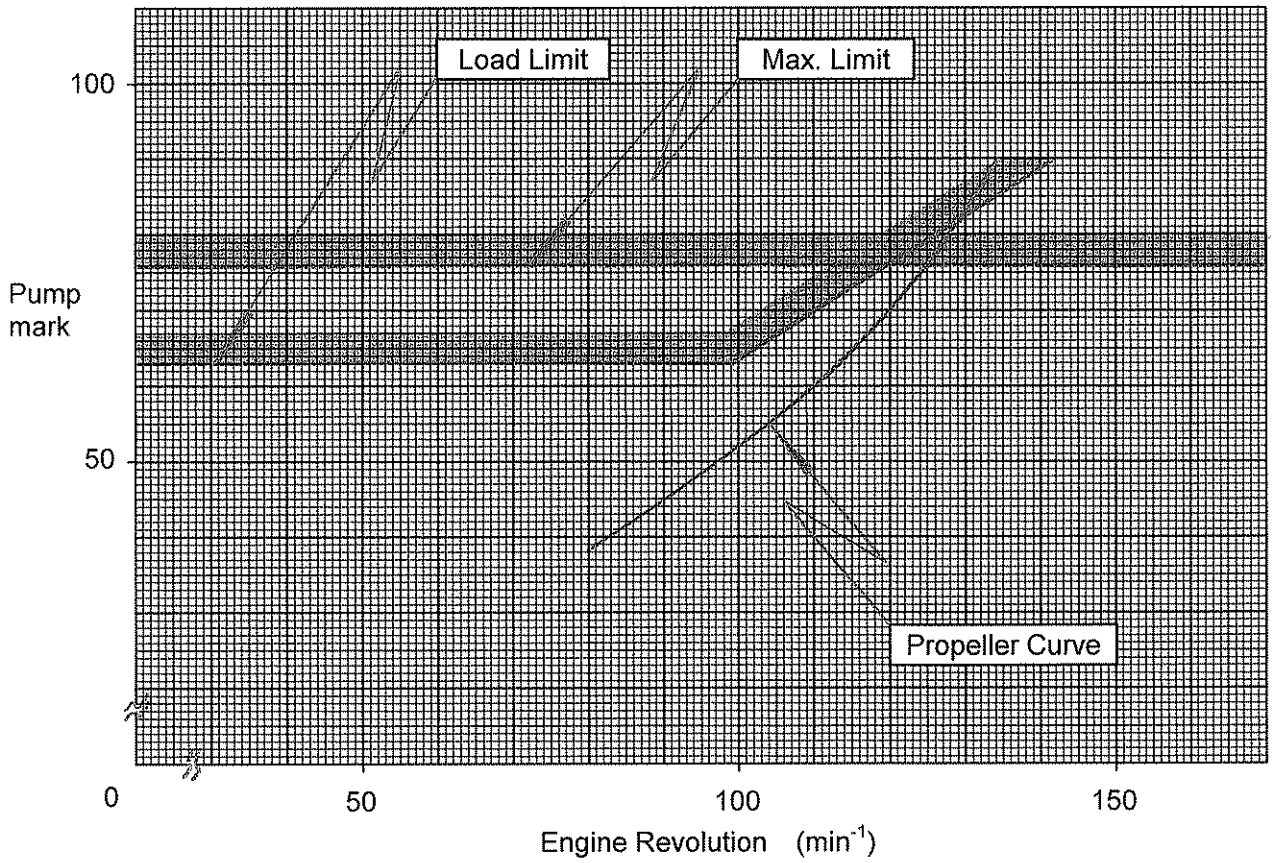

SAFETY VALVE SETTING TABLE

(Unit : MPa)

PART'S NAME	SETTING PRESS.
Safety valve for cylinder	20.0
Safety valve for scav. air receiver	0.37
Safety valve for crank case	0.005
Safety valve for thrust case	0.005
Explosion cap for starting air	6.0

THERMAL & PRESS. SWITCH SETTING TABLE

(Mark ➡ is applied for this engine)

ITEM	SHUT DOWN SET		SLOW DOWN SET		REMARKS
Cylinder cooling F.W. inlet press.			➡	0.13 MPa	
Cylinder cooling F.W. diff.press. (in/out)				0.02 MPa	
Main L.O. inlet low press	➡	0.08 MPa	➡	0.10 MPa	
Piston cooling oil inlet low press.				0.10 MPa	
Exh. valve L.O. inlet low press.		0.16 MPa			
T/C L.O. inlet low press.		0.08 MPa			Plane bearing
Cylinder cooling F.W. outlet high temp.			➡	90 or 95 ℃	*1)
Main L.O. inlet high temp.				60 ℃	
Piston cooling oil outlet high temp.			➡	75 ℃	
Exh. valve L.O. inlet high temp.				60 ℃	
T/C L.O. outlet high temp.				120 ℃	Ball bearing
Exh. gas cyl. outlet high temp.			➡	450 ℃	
Exh. gas cyl. outlet dev. temp from average				±60 ℃	
Scavenging box fire			➡	90 or 120 ℃	*1)
Thrust pad high temp.		85 ℃	➡	75 ℃	
Bearing shell high temp.				70 ℃	
L.O. from bearing shell high temp.				70 ℃	
L.O. from bearing dev. temp. from average				±7 ℃	
Others	➡	Emergency manual stop			
		T/C L.O. gravity tank low level shut down			
	➡	Oil mist high density slow down			
	➡	Piston cooling oil non-flow slow down			
	➡	Cyl. Oil non-flow slow down			
	➡	Intermediate shaft bearing high temp. slow down			
	➡	Stern tube bearing high temp. slow down			

Note : Press. setting at 1m above the middle platform except Main L.O. & P.C.O. inlet low press.
Main L.O. & P.C.O. inlet low press is valid at 1.8 meter higher than crank shaft.

*1) If the setting value of "slow down" and "alarm" can not be set independently, it should be set the "lower value".

REVOLUTION DETECTING SWITCH

ITEM	SYMBOL	SET VALUE	REMARKS
Over speed	OSS	136 min^{-1}	Shut down
Wrong way alarm	SAH	11 min^{-1}	AH side AS side
Crash astern level	RFU	Lower limit of territorial FULL in harbor	
Crash astern reset	RLC	11 min^{-1}	*(Air cut speed level)
Cyl. L.O. non-flow alarm cancel	RNFA	D/S-2 min^{-1}	

TIMER RELAY

ITEM	SYMBOL	SET VALUE	REMARKS
Cyl. L.O. non-flow alarm	CTR	15 sec.	

LIMIT SWITCH

ITEM	SYMBOL	SET VALUE	REMARKS
Wrong way alarm cancel	RWA	Handle stop pos.	

REVOLUTION DETECTING UNIT

ITEM	SYMBOL	SET VALUE
Air cut speed relay (AH)	SAH	11 min^{-1}
Brake air in meter relay	REV	below *(35% x M.C.O.)
Crash astern level	RFU	Lower limit of territrial full in harbor
Crash asten reset level	RLC	11 min^{-1} *(Air cut speed level)

* Finally decided at sea trial

PRESSURE SWITCH

ITEM	SYMBOL	SET VALUE
~~Detecting of start too long~~	~~PSF~~	~~0.2 MPa~~
F.O. rack zero position	PFZ	0.2 MPa
~~Light start inhibition~~	~~PLS~~	~~1.5 MPa~~

TIMER

ITEM	SYMBOL	SET VALUE
Holding of start speed (Crash astern)	CTGSP-2	6 sec.
Holding of start speed (Normal start)	CTGSP	6 sec.
Start too long	CTSTL	8 sec.
Crash astern	CTRFAH	4 min.
Load limit cut out (at crash astern)	CTSTP	30 sec.

STANDARD TABLE of PRESSURE & TEMPERATURE

at C.S.O. & M.C.O. LOAD

		Press. (MPa)		Temp. (°C)	
		Standard	Alarm	Standard	Alarm
Cylinder C.F.W.	Inlet	0.21 - 0.41	0.16	-	-
	Outlet	-	-	80 - 85	90
Air Cooler C.W.	Inlet	0.10 - 0.20	0.05	-	-
	Outlet	-	-	Less than inlet + 20	55
Main Lub. Oil	Inlet	0.14 - 0.26	0.12	40 - 47	55
	Outlet	-	-	50 - 60	65
Piston Cooling Oil	Inlet	0.14 - 0.26	0.14	-	-
	Outlet	-	-	50 - 65	70
Exh. Valve driving oil	Inlet	0.15 - 0.25	0.13	40 - 47	-
	Outlet	-	-	-	-
Fuel Oil	Inlet	0.70 - 0.80	0.65	-	-
TCA T/C Lub. Oil	Inlet	0.18 - 0.27	0.15	40 - 47	55
	Outlet	-	-	55 - 80	85
~~MET T/C Lub. Oil~~	Inlet	0.09-0.17	0.08	40 - 47	55
	Outlet	-	-	55 - 80	85
TPL T/C Lub. Oil	Inlet	0.13-0.25	0.12	40 - 47	55
	Outlet	-	-	60 - 95	110
~~VTR T/C Lub. Oil~~	Self Lub. Sys.	-	-	60 - 95	110

REMARK

These pressure values are valid at 1 meter higher than middle platform of main engine except Main Lub. Oil & Piston Cooling Oil inlet press. alarm.

Main Lub. Oil & Piston Cooling Oil pressure alarm values is valid at 1.8 meter higher than crank shaft.

PROCEDEURE OF LIFTING UP FUEL PUMP ROLLER GUIDE

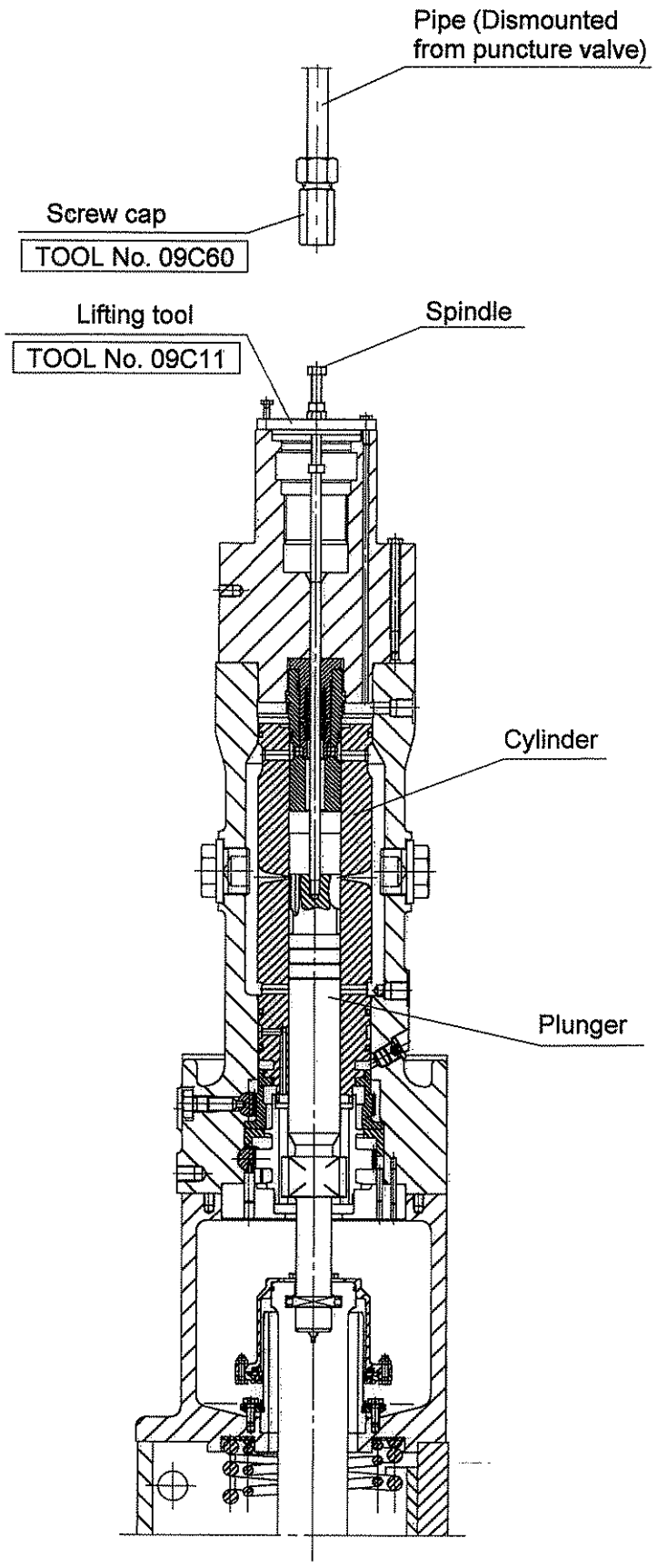

1) Stop the engine and close the fuel oil inlet valve.

   Open the drain cock, drain out from fuel pump.

2) Dismount the fuel oil high pressure pipe and the pipe connections from the puncture valve and blank off with the pipe with screw cap.

   TOOL No.09C60

3) Remove the inspection cover on the cam shaft housing in front of the fuel cam for the pertaining roller guide.

4) Turn the engine so that the cut off cylinder is at B.D.C..

   (Roller is in the highest position on the fuel cam).

5) Dismount the puncture valve.

6) Position the lifting tool on the fuel pump and screw the spindle into the top of the plunger.

   Using the lowermost nut pull up the plunger / roller guide as far as possible.

   TOOL No.09C11

7) Check that the roller guide hangs free and that there is a clearance between the roller and the cam.

EXHAUST VALVE CUT-OFF METHOD

1) Stop engine.

2) Disconnect the oil inlet pipe and blank off the pipe with the screw cap.

3) Remove the high pressure pipe.

4) Turn the engine so that the cut off cylinder is at B.D.C..

5) Position the lifting tool on hydraulic cylinder and screw the spindle into the nut of lifting tool touches with top flange.
Using the lowermost nut, pull up the roller guide so far that the hydraulic piston is tighten against the top of cylinder.

*When the roller guide is lifting up, the nut of lifting tool touches with top flange.

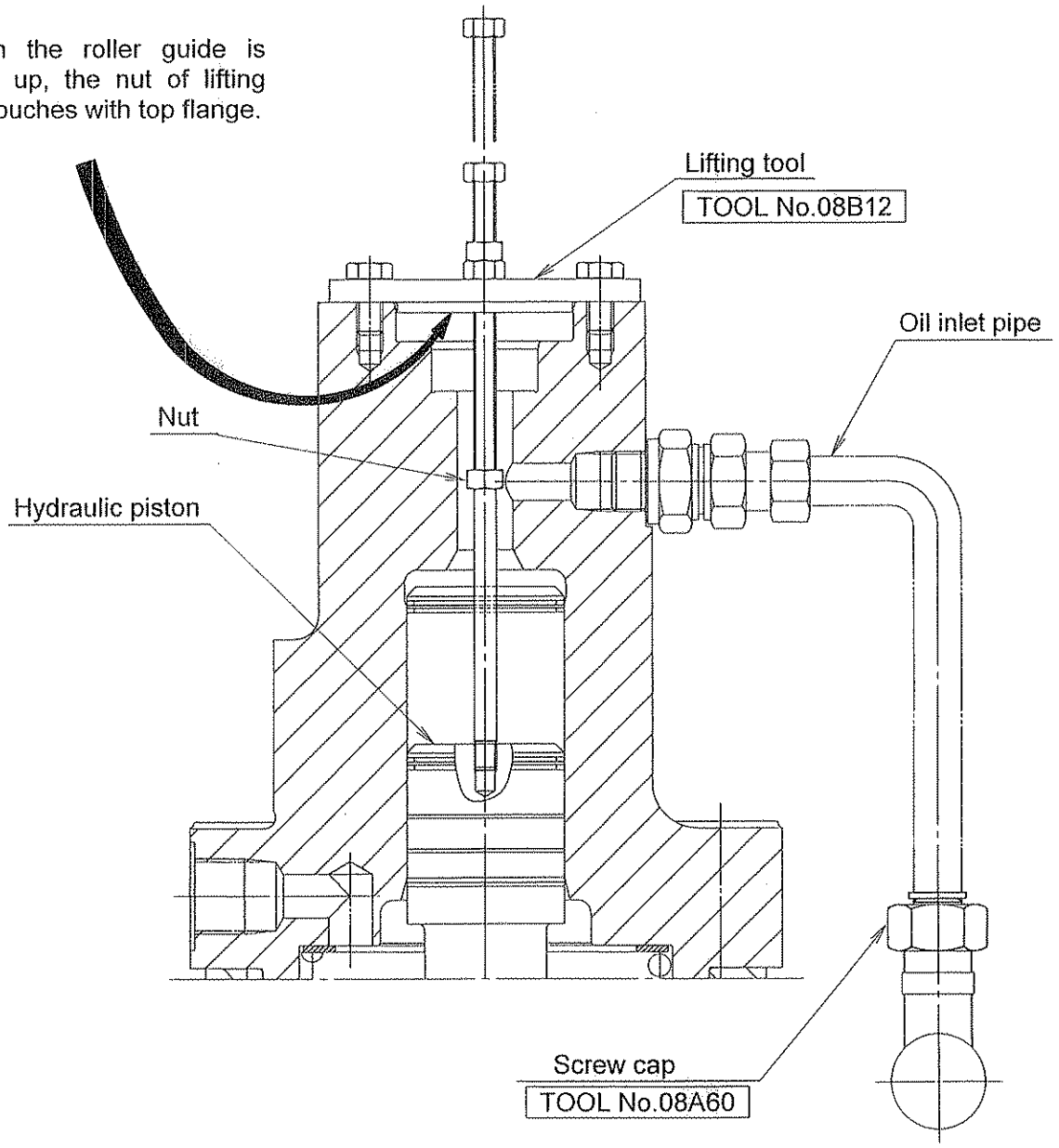

TURBO CHARGER CUT OFF RUNNING (TCA type Turbo charger)

(Single turbo charger system)

Note : Recommend the method of CASE "2"

Case 1 (Method by the rotor locking)

1. Dismantle the Silencer, Insert piece.
2. Lock the rotor with the locking tool. Tool No. 596A018
3. Stop the Lub. oil by blind flange (Fitted on L.O. inlet branch pipe.) (ref. p-32-1)

CASE 2 (Method by the rotor dismantling)

1. Dismantle the rotor. (Ref. Instruction book "Fitting and Accessories")
2. Fit the seal covers on the bearing housing.

   Tool No. 596A027, 596A028

3. Stop the Lub. oil by blind flange (Fitted on L.O. inlet branch pipe.) (ref. p-32-1)

CASE 1

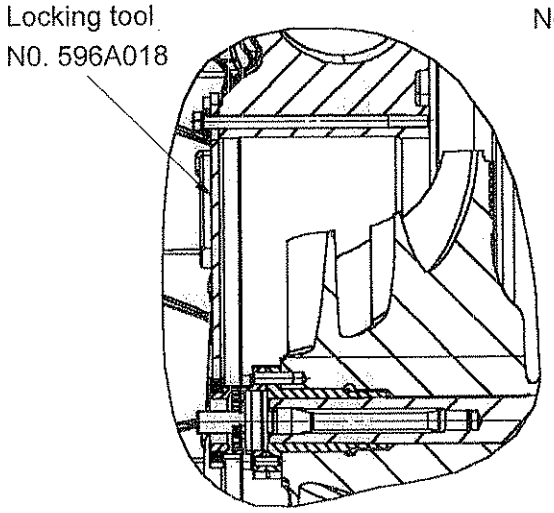

CASE 2

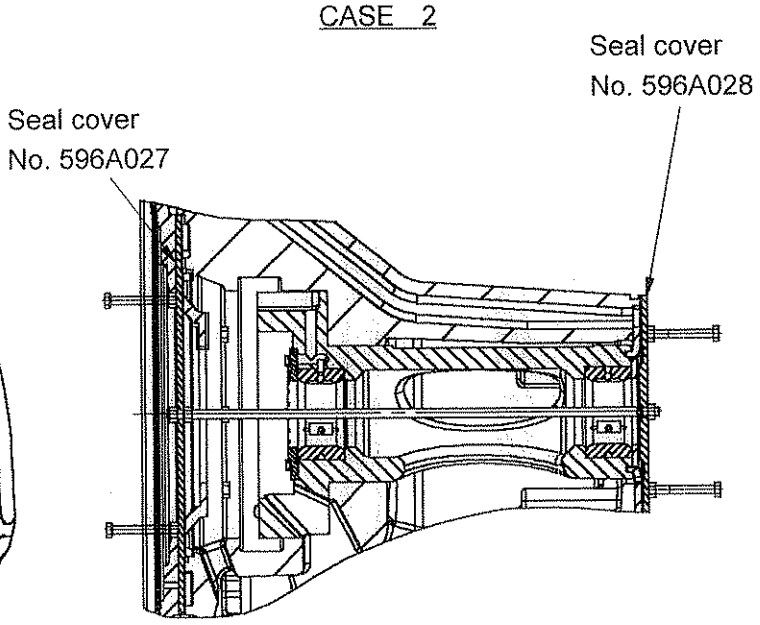

POWER TABLE

A. CYLINDER CUT OFF RUNNING

NO. OF WORKING CYLINDER	ONE CYL. CUT OFF RUNNING WITH COMP. ON PISTON
5	109 min^{-1}

*) IN CASE NO COMP. ON PISTON, MAX. r.p.m. to be limit at 55% of M.C.O..

NOTE : Ref. to INSTRUCTION BOOK "OPRATION" for each case of operating condition.

B. TURBO CHARGER CUT OFF RUNNING

NO. OF CYL.	NO. OF T/C	NO. OF WORKING T/C
		0
6	1	66 min^{-1}

NOTE : Temperature of exh. gas cylinder outlet should not exceed 450 ℃.

OPERTION OF ORIFICE ON T/C L.O. LINE AT T/C CUT OFF RUNNING

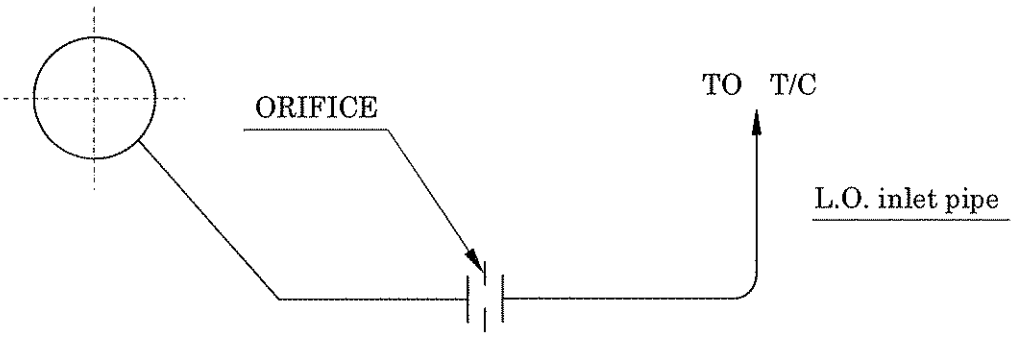

ORIFICE		
RUNNING CONDI-TION / T/C TYPE	NORMAL RUNNING	T/C CUT OFF RUNNING
➡ TCA66	ϕ 36	CLOSE (BLIND FLANGE)
TCA77	ϕ 53	

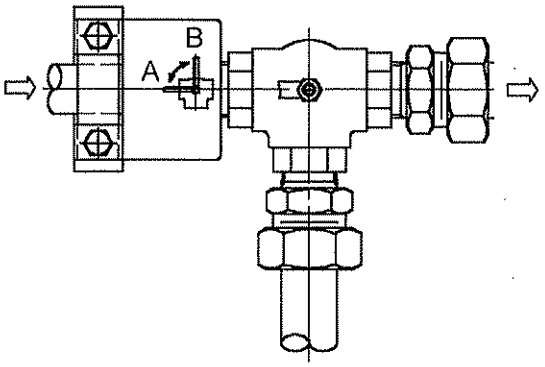

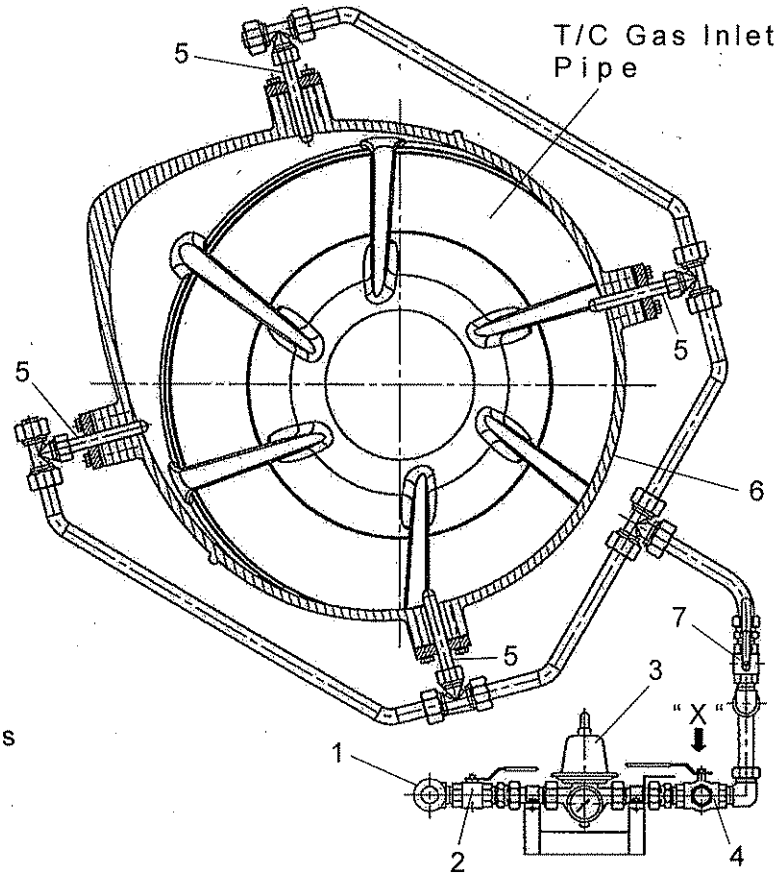

LEGENT] "X"

1 : Water Supply Pipe
2 : Main Stop Valve
3 : Press. Reducing Valve
4 : 3-Way Valve
A : WASHING
B : BLOWING OUT
5 : Spray Nozzle
6 : Exh. Pipe
7 : Stop Valve foe Spray Nozzles

Note : Number and arrangement of spray nozzles depends on engine type and may not coincide with those shown in drawing.

SEQUENCE OF OPERATION

(1) Reduce the engine load until turbine inlet gas temperature has dropped to 320℃ or until turbocharger speed has dropped to approximately

➡ TCA66	9500 min^{-1}
~~TCA77~~	~~8000 min^{-1}~~
~~TCA88~~	~~7000 min^{-1}~~

(2) After about 10 minutes, operate the washing device.
2.1 Set the three-way valve (4) to "WASHING".
2.2 Open the drain valve under the gas outlet casing. (Refer to next page)
2.3 Open the stop valve for spray nozzles (7).
2.4 Set the main stop valve (2) to flow position.
(3) Washing period is approximately 2 minutes at a water pressure of 0.20～0.30 MPa (check at pressure gauge on the pressure reducing valve (3).)
(4) Run the turbocharger dry for 2 minutes at reduced engine load.
(5) Repeat the washing procedure and the running dry (step (2)-(4)) 3～5 times.
(6) At the end of washing process:
6.1 Cut off the supply of water at the main stop valve (2).
6.2 Set the three-way valve (4) to "BLOWING OUT".
6.3 Close the stop valve for spray nozzles(7).
6.4 Close the drain valve under the gas outlet casing and set to the position for supply of sealing air.
6.5 Run the engine at about 1/4 load for 8 minutes to dry the turbine and then increase the load slowly, while listening for noise indicating that rotating parts make contact and checking for undue vibration that did not exist before.

*) It is recommended to carry out the turbine cleaning every 250 hours operation.

3-WAY DRAIN VALVE OPERATION

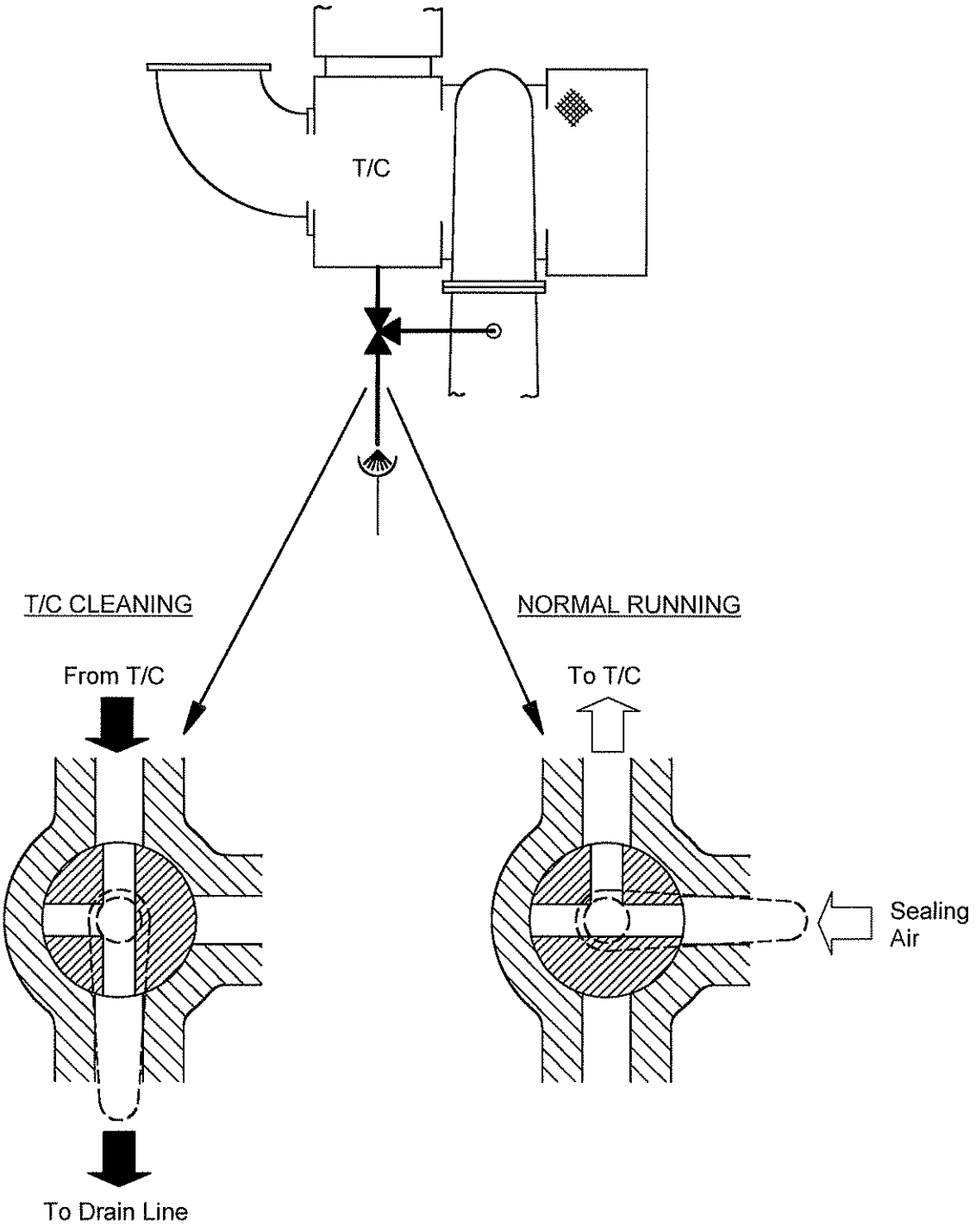

Prior to water cleaning make sure drain line is not blocked/clogged by confirming exh gas flow.

When normal running valve to always be in closed position

Cleaning Turbine by Solid material

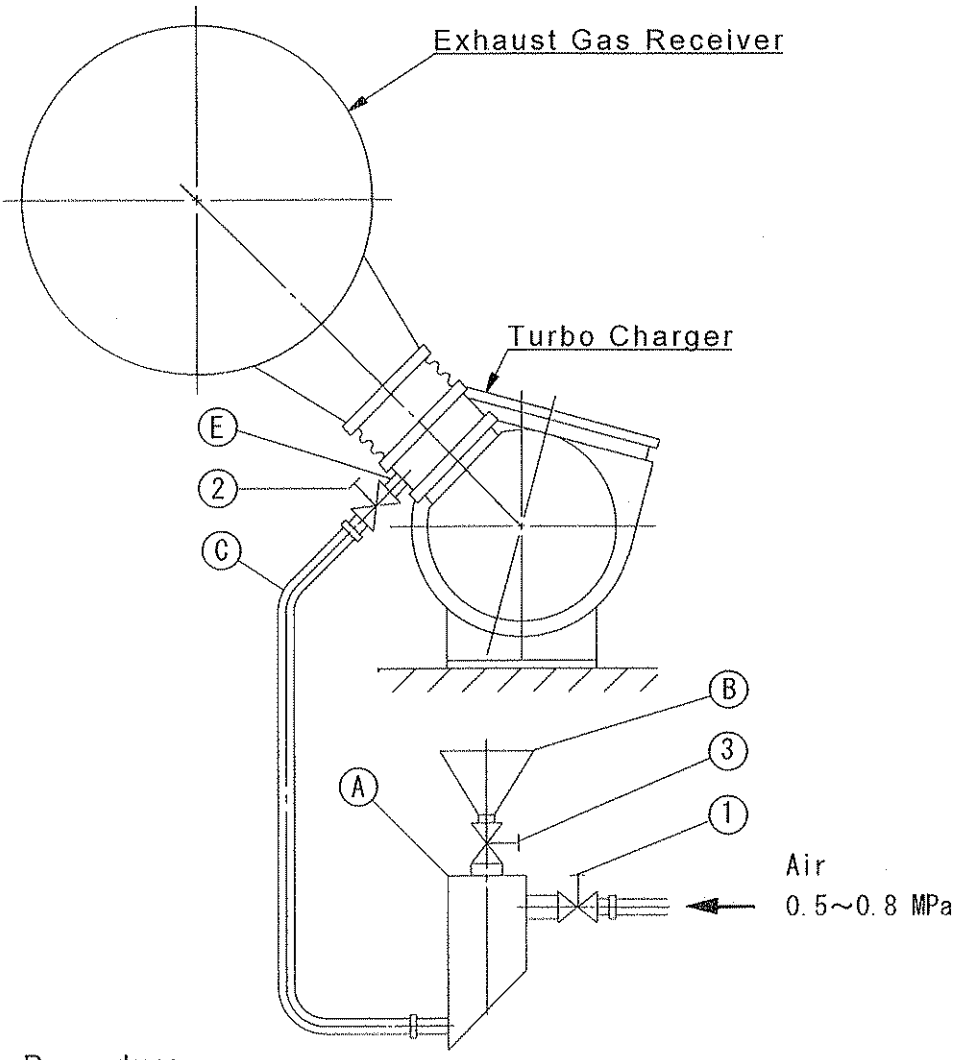

Cleaning Procedure

1) Confirm that the valve (3) is closed firmly.
2) Before pouring solid material into the filling tank (A), open the valve (2), and then open the valve (1) for 5 ~ 10 seconds.
   Note : A pipe (C) and nozzle (E) may have been clogged with the residual solid material.
   This operation makes it possible to clean them.
3) Close the valve in the order of (2)→(1).
   Confirm that the valve (1) is closed.
4) Pour a specified amount of solid material into the filling tank (A) from the hopper (B) after opening the valve (3), and close the valve (3).
5) Open the valves in the order of (1)→(2), and then the solid material is blown into the exhaust pipe through the pipe (C) and the nozzle (E) for about 30 seconds.
6) Close the valves in the order of (2)→(1).

*) It is recommended to carry out the turbine cleaning by solid material every 24 – 50 hours.

Cleaning Turbine by Solid Material

Solid Material

1) Formed activated carbon, grained activated carbon and crushed nut shells are suitable for solid material.

2) The cleaning effect depends on shape, size, hardness and specific gravity of solid material.
If they are improperly applied, nozzle vanes and turbine blades will be damaged.
The suitable size of solid material is 1.0 – 1.5 mm.
It must not be larger than 1.5 mm.

Cautions

1) Do not use solid material mixed with water.

2) If grained activated carbon or crushed nut shells is used, crush them into specified size pieces. (1.0 – 1.5 mm)

3) Do not open any drain valves of exhaust system and turbocharger, otherwise solid material will be burst out through the opening.

4) Be careful whether sparks draw out through chimney or not. If they are dangerous, stop the cleaning.

5) Surging during cleaning has to be avoided.
If surging occurs, the air supply has to be adjusted by valve (1).

Cleaning Condition

Normal operating load of engine.
no load reduction is necessary.

Turbocharger type	Quantity of solid material (liter)
➡ TCA66	1.5
~~TCA77~~	~~2.0~~
~~TCA88~~	~~2.5~~

50	DATA SHEET	G(a)
	MEASURING RESULT FOR EACH TIMING	P-34-1

Exhaust Cam advance angle (Ref. : P-15-1)

(degree)

Cyl.No.	1	2	3	4	5	6	7	8
Measured timing (AHEAD)	-5.5	-5.6	-5.4	-5.8	-5.6	-5.6		

Designed timing : -5.5° ± 0.5°

Fuel Pump (Ref. : P-14-2 & 3)

(mm)

Cyl.No.	1	2	3	4	5	6	7	8
LEAD "C"	14.1	14.3	14.2	14.4	14.3	14.2		

Designed : 14mm ± 0.5mm

ESTIMATION SHEET FOR BRAKE HORSE POWER

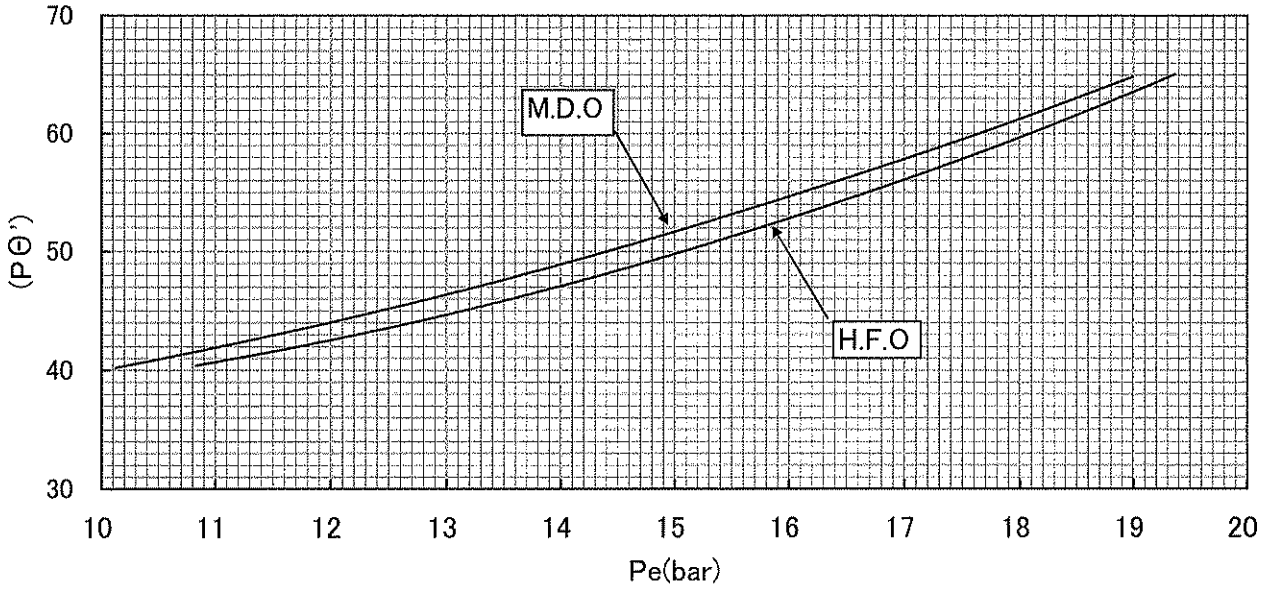

ESTIMATION SHEET FOR HULL CONDITION

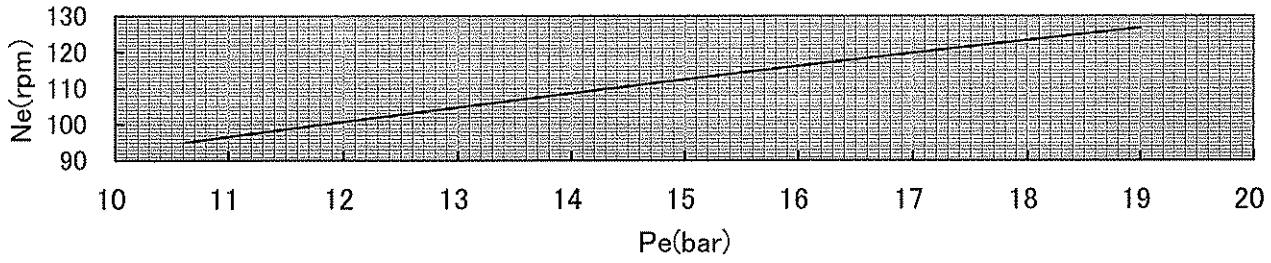

DIRECTION FOR USE

1.CORRECTED PUMP MARK INDEX (P θ ')

P θ '=P θ X K

K=K1 X K2 X (SPECIFIC GRAVITY OF FUEL AT 15°C)

WHERE P θ : AVERAGED PUMP MARK INDEX

K : CORRECTION FACTOR FOR FUEL PUMP MARK INDEX

2.MEAN EFFECTIVE PRESSURE(Pe)

horizontal coordinate.

3.CALCULATION FOR BRAKE HORSE POWER (BHP)

BHP=C X Pe X Ne

WHERE Ne : ENGINE SPEED (RPM)

C : CYLINDER COEFFICIENT 5.339

4.CALCULATION FOR OUTPUT (kW)

OUTPUT (kW) = BHP X 0.7355

NOTE:

In accordance with the above formulas, the estimated BHP can be obtained by using only "Pe-P θ '" curve. "Pe-Ne" curve is not available for estimation of BHP. This curve is just to check whether Hull condition is light or heavy.

Correction factor for fuel pump index K

K = K1 x K2 x gravity at 15 °C

Example

Fuel oil characteristics

- Lower calorific value : 9700 kcal / kg
  (If not provided, can be estimated from Sulphur Content and gravity)
- Specific gravity : 0.947 (@ 15°C)
- Preheated temp. : 104 °C

Ambient Condition

- Room temp. : 30°C
- Scav. air temp : 32°C

K1 = 0,953 K2 = 0.926

K = 0.953 x 0.926 x 0.947 = 0.836

Correction factor for fuel oil quality and change of ambient condition K1

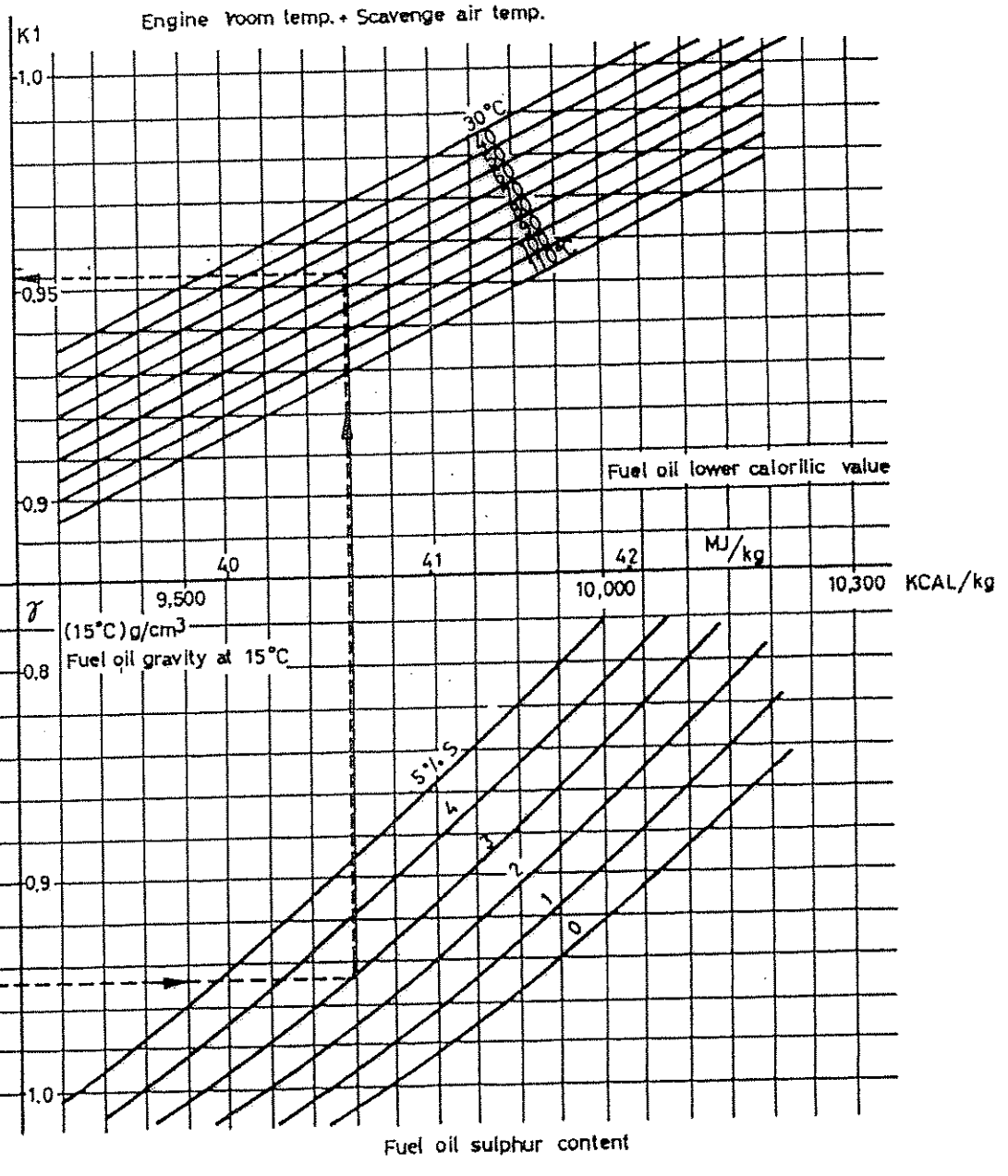

Correction factor K2 for fuel oil gravity at preheated condition

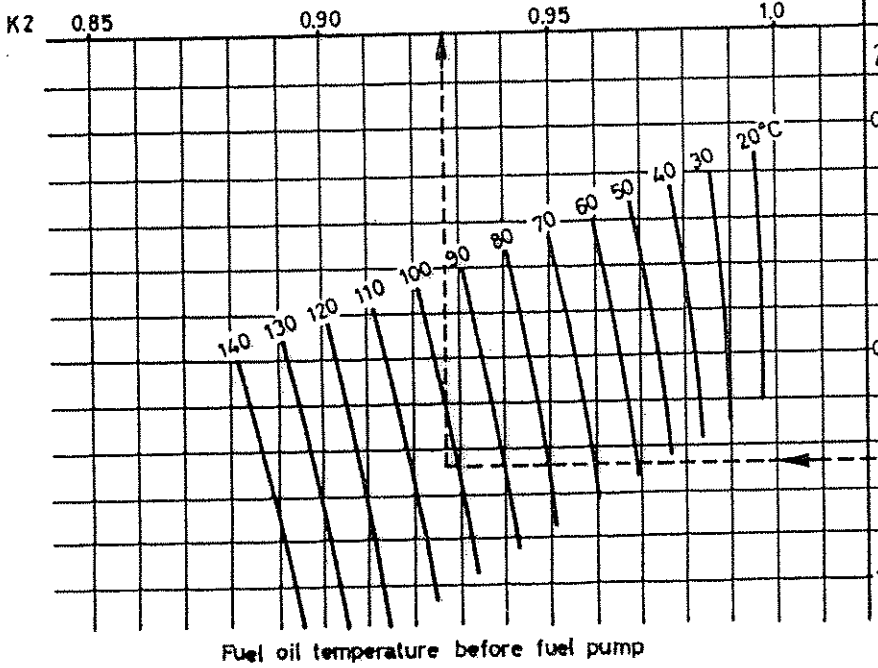

PLATE 70511-31

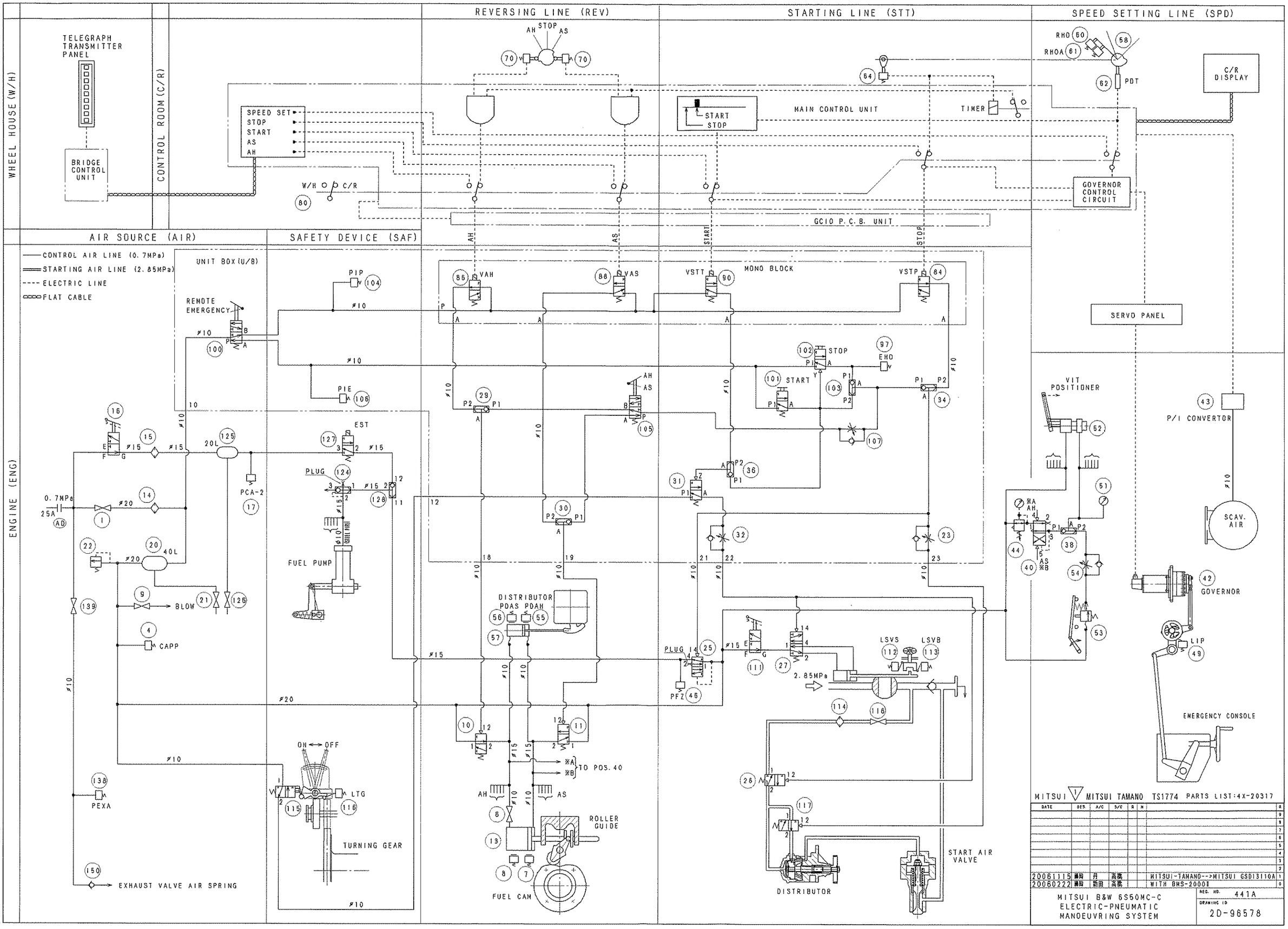

REVERSING LINE (REV)
STARTING LINE (STT)
SPEED SETTING LINE (SPD)
WHEEL HOUSE (W/H)
CONTROL ROOM (C/R)
TELEGRAPH TRANSMITTER PANEL
BRIDGE CONTROL UNIT
SPEED SET
STOP
START
AS
AH
W/H
C/R
MAIN CONTROL UNIT
TIMER
RHO
RHOA
PDT
C/R DISPLAY
GOVERNOR CONTROL CIRCUIT
GCIO P.C.B. UNIT
AIR SOURCE (AIR)
SAFETY DEVICE (SAF)
ENGINE (ENG)
CONTROL AIR LINE (0.7MPa)
STARTING AIR LINE (2.85MPa)
ELECTRIC LINE
FLAT CABLE
UNIT BOX (U/B)
REMOTE EMERGENCY
PIP
PIE
MONO BLOCK
VAH
VAS
VSTT
VSTP
EHO
SERVO PANEL
VIT POSITIONER
P/I CONVERTOR
SCAV. AIR
GOVERNOR
LIP
EMERGENCY CONSOLE
0.7MPa
25A
20L
40L
PCA-2
EST
PLUG
FUEL PUMP
BLOW
CAPP
PEXA
EXHAUST VALVE AIR SPRING
ON
OFF
LTG
TURNING GEAR
DISTRIBUTOR
PDAS
PDAH
TO POS. 40
ROLLER GUIDE
FUEL CAM
PFZ
LSVS
LSVB
2.85MPa
DISTRIBUTOR
START AIR VALVE
MITSUI
MITSUI TAMANO TS1774 PARTS LIST:4X-20317
DATE
DES.
A/C
S/C
R
M
20061115
20060222
MITSUI-TAMANO-->MITSUI GSD13110A
WITH BMS-2000
MITSUI B&W 6S50MC-C
ELECTRIC-PNEUMATIC
MANOEUVRING SYSTEM
REG. NO. 441A
DRAWING ID 2D-96578

710-4 INSPECTION RESULT FOR MAIN PARTS BEFORE AND AFTER SHOP TRIAL

図 面 来 歴
PLAN HISTORY

JOB No. TE2517

ENG. No. 5415

SHIP No. MITSUI TAMANO TS1774

表紙共 4 枚

配布先	
機品(デ試)	1
控	1
計	2

MITSUI TAMANO

MAIN ENGINE 6S50MC-C

INSPECTION RESULTS OF
MAIN PARTS

三井造船株式会社 玉野事業所
MITSUI ENGINEERING & SHIPBUILDING CO., LTD.

機械工場品質保証部ディーゼル品質保証グループ
MACHINERY FACTORY Q. A. DEPARTMENT DIESEL Q. A. GROUP

承認 APPROVE	照査 CHECK	作成 DRAWING
M. Saito	T. Morikawa	J. Harada

出図 DATE OF ISSUE	2009年10月21日
類別番号 CLASSIFI-CATION No.	
図面番号 DRAWING No.	

検 査 成 績 表

RESULT OF INSPECTION

FILE No.

SHEET No.

品名または名称 NAME	MAIN ENGINE (6S50MC-C) Crank shaft			三井造船株式会社玉野事業所 機械工場品質保証部ディーゼル品質保証グループ MITSUI ENG. & SHIPBUILD. CO., LTD. TAMANO WORKS MACHINERY FACTORY Q.A. DEPT. DIESEL Q.A. GROUP
検査事項 ITEM	DEFLECTION CHECK			
注文主 OWNER	MITSUI TAMANO			承認 APPROVE / 照査 CHECK / 作成 DRAWING
工事 No. JOB No. TE2517	船名 NAME OF SHIP MITSUI TAMANO TS1774	種別 No. CLASS No.	図面 No. DRAWING No.	M.Naito / T.Morikawa / J.Harada
材質 MATERIAL	個数 No.	検査場所 MEASURED PLACE MITSUI TAMANO	検査月日 MEASURED DATE	

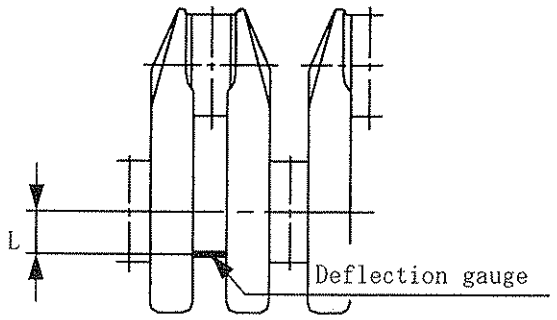

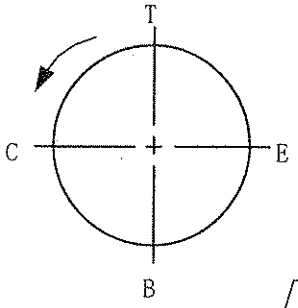

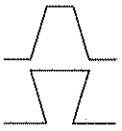

Mark(+) Elongation of distance between crank webs (+)

Mark(−) Diminution of distance between crank webs (−)

Mark L=290 mm

Measurement Unit : 1/100mm

Cyl/ No.		1	2	3	4	5	6	7	8	9	10	11	12
After setting in main bearing date : 11-09-09	B	0	0	0	0	0	0						
	E	+6	+6	+2	+1	+3	+3						
	T	+15	+10	+2	0	+4	+5						
	C	+7	+5	−1	0	+2	+3						
	B	0	0	0	0	0	0						
After tightening through stay bolt date : 29-09-09	BE	0	0	0	0	0	0						
	E	+10	+4	−1	−2	+1	+1						
	T	+18	+18	+1	−1	+8	+10						
	C	+15	+8	−1	−2	−1	+2						
	BC	0	0	+1	0	−2	0						
After coupling to water brake date : 30-09-09	BE	0	0	0	0	0	0						
	E	+10	+4	−1	−2	+3	−1						
	T	+18	+18	+1	−1	+9	+8						
	C	+15	+8	−1	−2	−2	+1						
	BC	0	0	+1	0	−2	−2						
	BE												
	E												
	T												
	C												
	BC												

検 査 成 績 表

RESULT OF INSPECTION

FILE No.

SHEET No.

品名または名称 NAME	MAIN ENGINE (6S50MC-C)			三井造船株式会社玉野事業所 機械工場品質保証部ディーゼル品質保証グループ MITSUI ENG. & SHIPBUILD. CO., LTD. TAMANO WORKS MACHINERY FACTORY Q.A. DEPT. DIESEL Q.A. GROUP
検査事項ITEM	BEARING CLEARANCE			承認 APPROVE / 照査 CHECK / 作成 DRAWING
注文主 OWNER	MITSUI TAMANO			
工事 No. JOB No. TE2517	船名 NAME OF SHIP MITSUI TAMANO TS1774	種別 No. CLASS No.	図面 No. DRAWING No.	M.Daid / T.Morikawa / J.Harada
材質 MATERIAL	個数 No.	検査場所 MEASURED PLACE MITSUI TAMANO	検査月日 MEASURED DATE	

検査月日 09-09-09

Clearance of cross head bearing (Standard=15～50)　　Unit : 1/100 mm

Cyl. No.	1	2	3	4	5	6	7	8	9	10	11	12
F	27	27	26	23	27	32						
A	27	27	25	24	26	32						

検査月日 30-09-09

Clearance of crank pin bearing (Standard=25～50)　　Unit : 1/100 mm

Cyl. No.	1	2	3	4	5	6	7	8	9	10	11	12
F	37	37	37	37	35	38						
A	38	38	36	36	35	36						

検査月日 24-09-09

Clearance of main bearing　Standard= Foremost and two aftmost : 32～64
= Others : 32～58

Unit : 1/100 mm

J No.	1	2	3	4	5	6	7	8	9	10	11	12	13	14	15	16
F	45	44	45	45	44	45	45	44								
A	44	44	45	44	44	45	45	44								

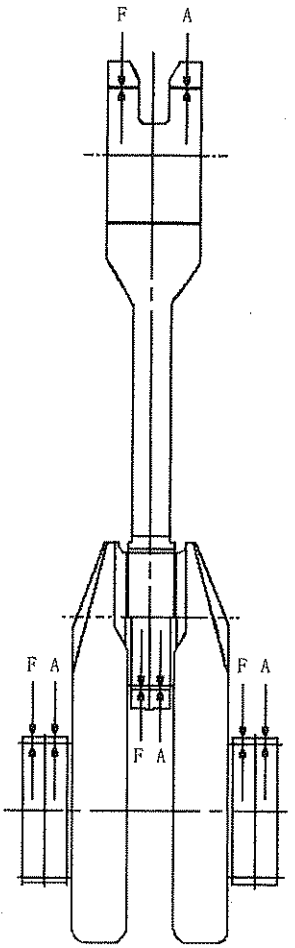

Measurement Unit : 1/1mm

Standard	Actual
0.5～1.0mm	0.60mm

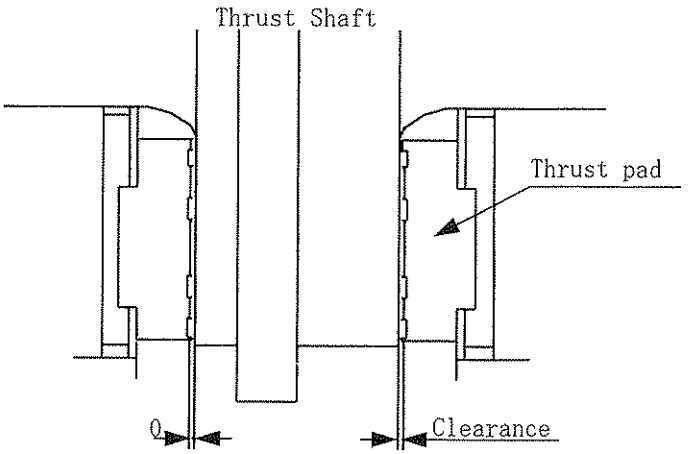

検 査 成 績 表

RESULT OF INSPECTION

FILE No.

SHEET No.

品名または名称 NAME	MAIN ENGINE (6S50MC-C) Cylinder Liner			三井造船株式会社玉野事業所 機械工場品質保証部ディーゼル品質保証グループ MITSUI ENG. & SHIPBUILD. CO., LTD. TAMANO WORKS MACHINERY FACTORY Q.A. DEPT. DIESEL Q.A. GROUP
検査事項 ITEM	DIMENSION CHECK			
注文主 OWNER	MITSUI TAMANO			承認 APPROVE / 照査 CHECK / 作成 DRAWING
工事 No. JOB No.	船名 NAME OF SHIP	種別 No. CLASS No.	図面 No. DRAWING No.	
TE2517	MITSUI TAMANO TS1774			
材質 MATERIAL	個数 No.	検査場所 MEASURED PLACE	検査月日 MEASURED DATE	
	7	MITSUI TAMANO	20-08-09	

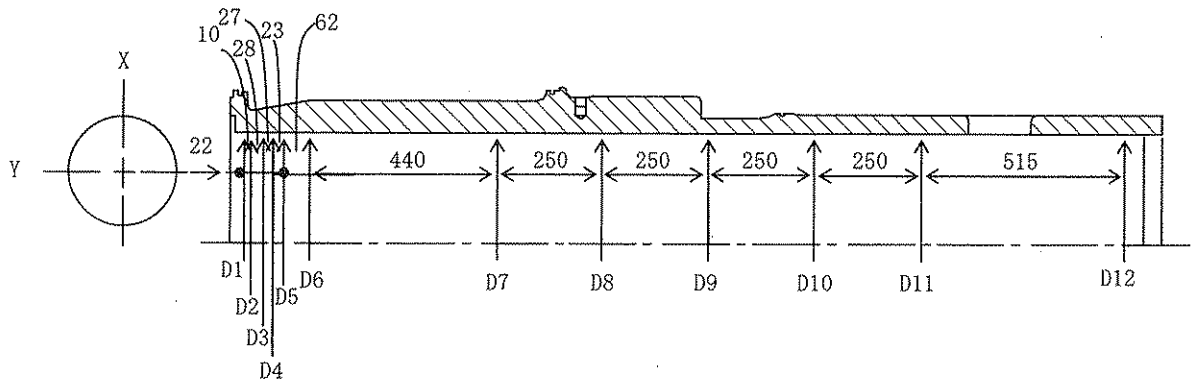

X=Cam side Y=Aft side Wall temp(34)℃

Measurement Unit : 1/100mm

cy 1. No.	Position		D1	D2	D3	D4	D5	D6	D7	D8	D9	D10	D11	D12
	Standard		+0.097 ∅500 0											
	Direction / Charge No.													
1	T-310DY	X	+7.0	+7.0	+7.0	+7.0	+7.0	+7.0	+8.5	+8.5	+8.5	+9.0	+9.0	+9.0
		Y	+6.0	+6.0	+6.0	+6.0	+6.0	+6.0	+8.0	+8.0	+8.0	+9.5	+9.5	+9.5
2	T-311DY	X	+7.0	+7.0	+7.0	+7.0	+7.0	+7.0	+8.0	+8.0	+8.0	+9.5	+9.5	+9.5
		Y	+6.0	+6.0	+6.0	+6.0	+6.0	+6.0	+8.0	+8.0	+8.0	+9.0	+9.0	+9.0
3	T-312DY	X	+7.5	+7.5	+7.5	+7.5	+7.5	+7.5	+8.0	+8.0	+8.0	+8.5	+8.5	+8.5
		Y	+6.0	+6.0	+6.0	+6.0	+6.0	+6.0	+8.0	+8.0	+8.0	+9.0	+9.0	+9.0
4	T-313DY	X	+7.0	+7.0	+7.0	+7.0	+7.0	+7.0	+9.0	+9.0	+9.0	+9.0	+9.0	+9.0
		Y	+8.0	+8.0	+8.0	+8.0	+8.0	+8.0	+9.0	+9.0	+9.0	+9.0	+9.0	+9.0
5	T-314DY	X	+8.0	+8.0	+8.0	+8.0	+8.0	+8.0	+9.0	+9.0	+9.0	+9.0	+9.0	+9.0
		Y	+8.0	+8.0	+8.0	+8.0	+8.0	+8.0	+9.0	+9.0	+9.0	+9.0	+9.0	+9.0
6	T-315DY	X	+5.0	+5.0	+5.0	+5.0	+5.0	+5.0	+5.5	+5.5	+5.5	+6.0	+6.0	+6.0
		Y	+6.0	+6.0	+6.0	+6.0	+6.0	+6.0	+6.0	+6.0	+6.0	+7.0	+7.0	+7.0
		X												
		Y												
spare	T-316DY	X	+7.0	+7.0	+7.0	+7.0	+7.0	+7.0	+8.0	+8.0	+8.0	+7.5	+7.5	+7.5
		Y	+8.0	+8.0	+8.0	+8.0	+8.0	+8.0	+9.0	+9.0	+9.0	+9.0	+9.0	+9.0
		X												
		Y												
		X												
		Y												

710-5 SPRAY SHIELDING OF FLAMMABLE OIL

MITSUI ENGINEERING & SHIPBUILDING CO., LTD.
TAMANO WORKS
1-1, TAMA 3-CHOME, TAMANO, OKAYAMA PREF., 706-8651 JAPAN
TELEPHONE +81 863-23-2530
FAX +81 863-23-2769

可燃性油飛散防止対策について

Spray shielding of flammable oil

・弊社では可燃性油飛散防止対策として、アルミガラスクロス(添付)を使用しております。本件は日本海事協会より承認を得て実施しております。(NK Ref No:05MF406)

・Our company uses the aluminum glass cloth (attached) to prevent flammable oil spraying from flange connections and bite type joints. This matter obtains approval of Nippon Kaiji Kyokai. (NK Ref No:05MF 406)

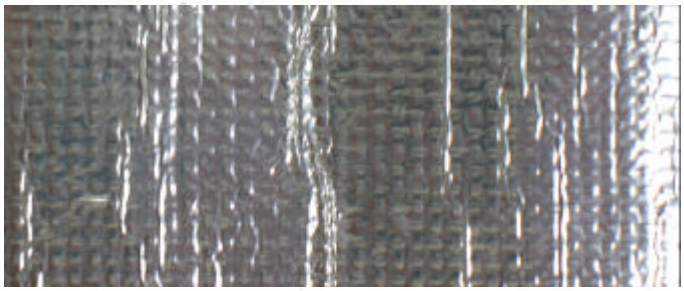

M.TAKAHASHI,
Assistant Manager of Diesel Design Department

M Takahashi